chanhvinh.com

Aluminum Electrolytic Capacitors
Axial Standard Miniature



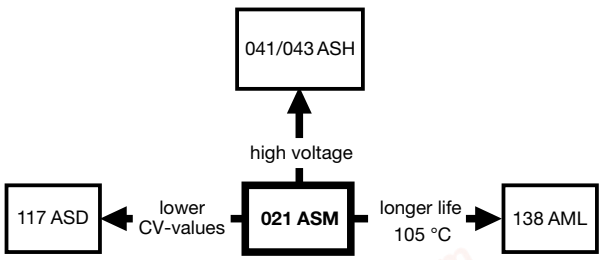

Fig. 1

FEATURES

- Long useful life: 2500 h to 8000 h at 85 °C
- Miniaturized, high CV-product per unit volume
- Charge and discharge proof
- Taped versions up to case Ø 15 mm x 30 mm available for automatic insertion
- Polarized aluminum electrolytic capacitors, non-solid electrolyte
- Axial leads, cylindrical aluminum case, insulated with a blue sleeve
- Mounting ring version not available in insulated form
- Material categorization: for definitions of compliance please see www.vishay.com/doc?99912

Pb-free
RoHS COMPLIANT

APPLICATIONS

- General purpose, industrial, automotive, audio-video
- Coupling, decoupling, smoothing, filtering, buffering
- Portable and mobile equipment (small size, low mass)
- Low mounting height boards, vibration, and shock resistant

MARKING

The capacitors are marked (where possible) with the following information:

- Rated capacitance (in µF)
- Tolerance on rated capacitance, code letter in accordance with IEC 60062 (M for ± 20 %)
- Rated voltage (in V)
- Upper category temperature (85 °C)
- Date code in accordance with IEC 60062
- Code for factory of origin
- Name of manufacturer
- Negative terminal identification
- Series number (021)

QUICK REFERENCE DATA

DESCRIPTION	VALUE	
Nominal case sizes (Ø D x L in mm)	4.5 x 10 to 10 x 25	10 x 30 to 21 x 38
Rated capacitance range, C_R	1 µF to 15 000 µF	
Tolerance on C_R	± 20 %	
Rated voltage range, U_R	6.3 V to 100 V	
Category temperature range	-40 °C to +85 °C	
Endurance test at 85 °C: U_R = 6.3 V to 25 V U_R = 40 V to 100 V	 1000 h 2000 h	 5000 h 5000 h
Endurance test at 105 °C	-	2000 h
Useful life at 85 °C	2500 h	8000 h
Useful life at 40 °C, 1.4 x I_R applied	70 000 h	200 000 h
Shelf life at 0 V, 85 °C	500 h	
Based on sectional specification	IEC 60384-4 / EN 130300	
Climatic category IEC 60068	40 / 085 / 56	

SELECTION CHART FOR C_R, U_R, AND RELEVANT NOMINAL CASE SIZES (Ø D x L in mm)

C_R (µF)	U_R (V)						
	6.3	10	16	25	40	63	100
1.0	-	-	-	-	-	4.5 x 10	4.5 x 10
2.2	-	-	-	-	-	4.5 x 10	4.5 x 10
3.3	-	-	-	-	-	4.5 x 10	-
4.7	-	-	-	-	-	4.5 x 10	4.5 x 10
10	-	-	-	-	-	4.5 x 10	6 x 10
15	-	-	-	-	-	4.5 x 10	8 x 11
	-	-	-	-	-	-	6.5 x 18
22	-	-	-	-	4.5 x 10	6 x 10	8 x 11
	-	-	-	-	-	-	6.5 x 18
33	-	-	-	-	-	6 x 10	6.5 x 18
47	-	-	-	4.5 x 10	6 x 10	8 x 11	8 x 18
	-	-	-	-	-	6.5 x 18	-

For technical questions, contact: aluminumcaps1@vishay.com
THIS DOCUMENT IS SUBJECT TO CHANGE WITHOUT NOTICE. THE PRODUCTS DESCRIBED HEREIN AND THIS DOCUMENT ARE SUBJECT TO SPECIFIC DISCLAIMERS, SET FORTH AT www.vishay.com/doc?91000

chanhvinh.com

SELECTION CHART FOR C_R, U_R, AND RELEVANT NOMINAL CASE SIZES (Ø D x L in mm)							
C_R (µF)	U_R (V)						
	6.3	10	16	25	40	63	100
68	-	-	4.5 x 10	-	-	8 x 11	10 x 18
	-	-	-	-	-	6.5 x 18	-
100	-	4.5 x 10	-	6 x 10	8 x 11	8 x 18	10 x 25
	-	-	-	-	6.5 x 18	-	10 x 30
150	-	-	6 x 10	8 x 11	8 x 18	10 x 18	12.5 x 30
	-	-	-	6.5 x 18	-	-	-
220	-	6 x 10	8 x 11	6.5 x 18	10 x 18	10 x 25	12.5 x 30
	-	-	-	-	-	10 x 30	-
330	-	8 x 11	6.5 x 18	8 x 18	10 x 25	12.5 x 30	15 x 30
470	8 x 11	6.5 x 18	8 x 18	10 x 18	10 x 25	12.5 x 30	18 x 30
	-	-	-	-	10 x 30	-	-
680	-	8 x 18	10 x 18	10 x 25	12.5 x 30	15 x 30	18 x 38
	-	-	-	10 x 30	-	-	-
1000	8 x 18	10 x 18	10 x 25	12.5 x 30	12.5 x 30	18 x 30	21 x 38
	-	-	10 x 30	-	-	-	-
1500	-	10 x 25	12.5 x 30	12.5 x 30	15 x 30	18 x 38	-
	-	10 x 30	-	-	-	-	-
2200	10 x 25	12.5 x 30	12.5 x 30	15 x 30	18 x 30	21 x 38	-
3300	-	12.5 x 30	15 x 30	18 x 30	18 x 38	-	-
4700	-	15 x 30	18 x 30	18 x 38	21 x 38	-	-
6800	-	18 x 30	18 x 38	21 x 38	-	-	-
10 000	-	18 x 38	21 x 38	-	-	-	-
15 000	-	21 x 38	-	-	-	-	-

DIMENSIONS in millimeters AND AVAILABLE FORMS

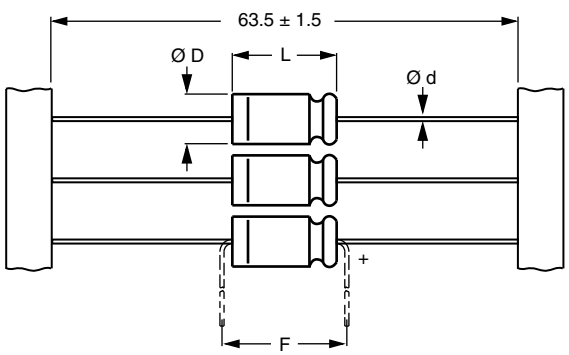

Form BR: Taped on reel
Form BA: Taped in box (ammopack)
Case Ø D x L = 4.5 mm x 10 mm to 8 mm x 11 mm

Fig. 2 - **Forms BA** and **BR**

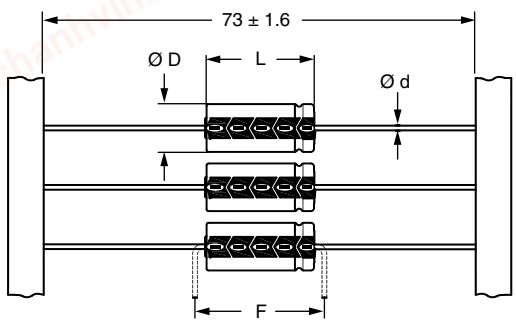

Form BR: Taped on reel
Case Ø D x L = 6.5 mm x 18 mm to 15 mm x 30 mm
Form BA: Taped in box (ammopack)
Case Ø D x L = 6.5 mm x 18 mm to 10 mm x 25 mm

Fig. 3 - **Forms BA** and **BR**

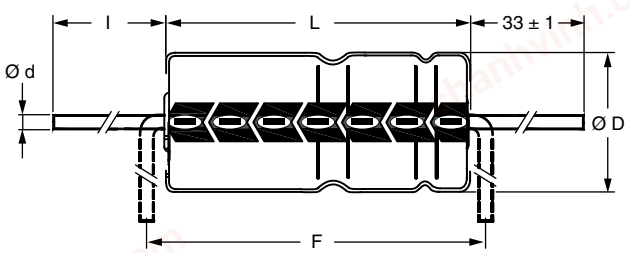

Form AA: Axial in box
Case Ø D x L = 10 mm x 30 mm to 21 mm x 38 mm

Fig. 4 - **Form AA**

For technical questions, contact: aluminumcaps1@vishay.com
THIS DOCUMENT IS SUBJECT TO CHANGE WITHOUT NOTICE. THE PRODUCTS DESCRIBED HEREIN AND THIS DOCUMENT ARE SUBJECT TO SPECIFIC DISCLAIMERS, SET FORTH AT www.vishay.com/doc?91000

chanhvinh.com

Table 1

AXIAL; DIMENSIONS in millimeters, **MASS AND PACKAGING QUANTITIES**										
NOMINAL CASE SIZE Ø D x L	**CASE CODE**	**AXIAL: FORM AA, BA, AND BR**					**MASS (g)**	**PACKAGING QUANTITIES**		
		Ø d	**l**	**Ø $D_{max.}$**	**$L_{max.}$**	**$F_{min.}$**		**FORM AA**	**FORM BA**	**FORM BR**
4.5 x 10	2	0.6	-	5.0	10.5	15	≈ 0.5	-	1000	3000
6 x 10	3	0.6	-	6.3	10.5	15	≈ 0.7	-	1000	1000
8 x 11	5a	0.6	-	8.5	11.5	15	≈ 1.1	-	500	500
6.5 x 18	4	0.8	-	6.9	18.5	25	≈ 1.3	-	1000	1000
8 x 18	5	0.8	-	8.5	18.5	25	≈ 1.7	-	500	500
10 x 18	6	0.8	-	10.5	18.5	25	≈ 2.5	-	500	500
10 x 25	7	0.8	-	10.5	25.5	30	≈ 3.3	-	500	500
10 x 30	00	0.8	55 ± 1	10.5	30.5	35	≈ 4.8	340	-	500
12.5 x 30	01	0.8	55 ± 1	13.0	30.5	35	≈ 7.4	260	-	400
15 x 30	02	0.8	55 ± 1	15.5	30.5	35	≈ 11.7	200	-	250
18 x 30	03	0.8	55 ± 1	18.5	30.5	35	≈ 12.9	120	-	-
18 x 38	04	0.8	34 ± 1	18.5	39.5	44	≈ 19.0	125	-	-
21 x 38	05	0.8	34 ± 1	21.5	39.5	44	≈ 24.0	100	-	-

Note

- For detailed tape dimensions, please see www.vishay.com/doc?28361.

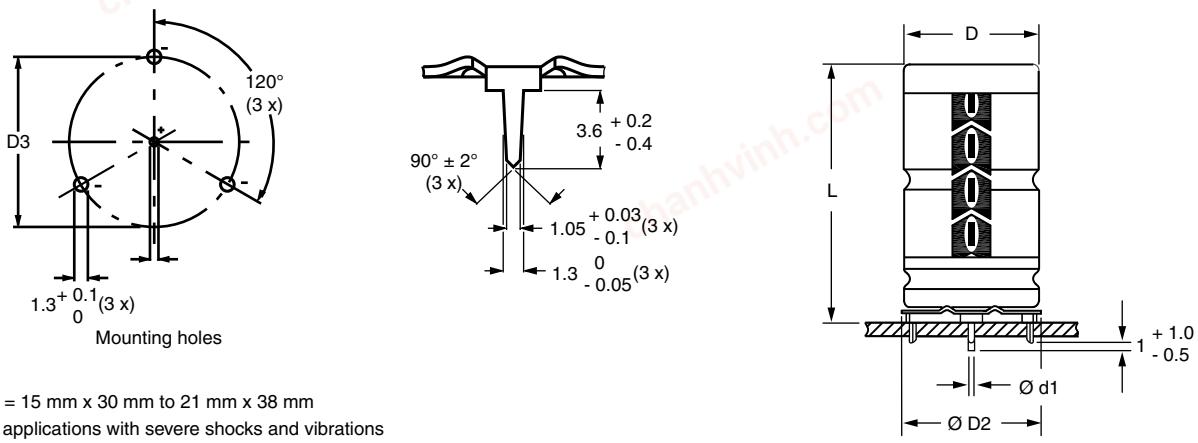

Form MR:
Case Ø D x L = 15 mm x 30 mm to 21 mm x 38 mm
Especially for applications with severe shocks and vibrations

Fig. 5 - Mounting hole diagram and outline. **Form MR:** With mounting ring and pins

Table 2

MOUNTING RING; DIMENSIONS in millimeters, **MASS AND PACKAGING QUANTITIES**								
NOMINAL CASE SIZE Ø D x L	**CASE CODE**	**MOUNTING RING: FORM MR**					**MASS (g)**	**PACKAGING QUANTITIES**
		Ø d1	**Ø d2**	**Ø $D2_{max.}$**	**D3**	**$L_{max.}$**		
15 x 30	02	0.8	1.0 + 0.4	17.5	16.5 ± 0.2	33	≈ 11.7	200
18 x 30	03	0.8	1.0 + 0.4	19.5	18.5 ± 0.2	33	≈ 12.9	240
18 x 38	04	0.8	1.0 + 0.4	19.5	18.5 ± 0.2	42	≈ 19.0	100
21 x 38	05	0.8	1.0 + 0.4	22.5	21.5 ± 0.2	42	≈ 24.0	100

For technical questions, contact: aluminumcaps1@vishay.com
THIS DOCUMENT IS SUBJECT TO CHANGE WITHOUT NOTICE. THE PRODUCTS DESCRIBED HEREIN AND THIS DOCUMENT ARE SUBJECT TO SPECIFIC DISCLAIMERS, SET FORTH AT www.vishay.com/doc?91000

chanhvinh.com

ELECTRICAL DATA	
SYMBOL	DESCRIPTION
C_R	Rated capacitance at 100 Hz, tolerance ± 20 %
I_R	Rated RMS ripple current at 100 Hz, 85 °C
I_{L5}	Max. leakage current after 5 min at U_R
tan δ	Max. dissipation factor at 100 Hz
ESR	Equivalent series resistance at 100 Hz (calculated from tan $\delta_{max.}$ and C_R)
Z	Max. impedance at 10 kHz

Note

- Unless otherwise specified, all electrical values in Table 3 apply at T_{amb} = 20 °C, P = 86 kPa to 106 kPa, RH = 45 % to 75 %.

ORDERING EXAMPLE

Electrolytic capacitor 021 series

1000 µF / 16 V; ± 20 %

Nominal case size: Ø 10 mm x 25 mm; Form BA

Ordering code: MAL202190518E3
Former 12 NC: 2222 021 90518

Table 3

ELECTRICAL DATA AND ORDERING INFORMATION

U_R (V)	C_R 100 Hz (µF)	NOMINAL CASE SIZE Ø D x L (mm)	I_R 100 Hz 85 °C (mA)	I_{L5} 5 min (µA)	tan δ 100 Hz	ESR 100 Hz (Ω)	Z 10 kHz (Ω)	LIFE CODE (1)	ORDERING CODE MAL2021..... IN BOX FORM AA	TAPED ON REEL FORM BR	TAPED IN BOX FORM BA	MOUNTING RING FORM MR
6.3	470	8 x 11	260	10	0.25	0.850	0.640	L1	-	23471E3	33471E3	-
	1000	8 x 18	440	17	0.25	0.400	0.500	L1	-	23102E3	33102E3	-
	2200	10 x 25	710	32	0.29	0.210	0.160	L1	-	90588E3	90589E3	-
10	100	4.5 x 10	100	6	0.20	3.200	2.000	L1	-	24101E3	34101E3	-
	220	6 x 10	160	8.4	0.20	1.500	0.910	L1	-	24221E3	34221E3	-
	330	8 x 11	230	11	0.20	1.000	0.610	L1	-	24331E3	34331E3	-
	470	6.5 x 18	310	13	0.20	0.680	0.430	L1	-	24471E3	34471E3	-
	680	8 x 18	400	18	0.20	0.470	0.290	L1	-	24681E3	34681E3	-
	1000	10 x 18	550	24	0.20	0.320	0.200	L1	-	24102E3	34102E3	-
	1500	10 x 25	690	34	0.23	0.250	0.180	L1	-	90524E3	90525E3	-
	1500	10 x 30	740	34	0.23	0.245	0.180	L3	14152E3	24152E3	-	-
	2200	12.5 x 30	980	48	0.25	0.177	0.095	L3	14222E3	24222E3	-	-
	3300	12.5 x 30	1090	70	0.27	0.128	0.095	L3	14332E3	24332E3	-	-
	4700	15 x 30	1320	98	0.29	0.100	0.070	L3	14472E3	24472E3	-	44472E3
	6800	18 x 30	1590	140	0.34	0.079	0.065	L3	14682E3	-	-	44682E3
	10 000	18 x 38	2090	204	0.40	0.064	0.040	L3	14103E3	-	-	44103E3
	15 000	21 x 38	2250	304	0.50	0.054	0.035	L3	14153E3	-	-	44153E3
16	68	4.5 x 10	90	6.2	0.16	3.800	2.400	L1	-	25689E3	35689E3	-
	150	6 x 10	140	8.8	0.16	1.700	1.100	L1	-	25151E3	35151E3	-
	220	8 x 11	210	11	0.16	1.200	0.730	L1	-	25221E3	35221E3	-
	330	6.5 x 18	290	15	0.16	0.770	0.480	L1	-	25331E3	35331E3	-
	470	8 x 18	380	19	0.16	0.550	0.340	L1	-	25471E3	35471E3	-
	680	10 x 18	500	26	0.16	0.380	0.240	L1	-	25681E3	35681E3	-
	1000	10 x 25	660	36	0.16	0.260	0.180	L1	-	90517E3	90518E3	-
	1000	10 x 30	700	36	0.16	0.260	0.175	L3	15102E3	25102E3	-	-
	1500	12.5 x 30	950	52	0.19	0.205	0.095	L3	15152E3	25152E3	-	-
	2200	12.5 x 30	1040	74	0.21	0.150	0.095	L3	15222E3	25222E3	-	-
	3300	15 x 30	1290	110	0.23	0.111	0.070	L3	15332E3	25332E3	-	45332E3
	4700	18 x 30	1560	154	0.25	0.087	0.065	L3	15472E3	-	-	45472E3
	6800	18 x 38	2040	222	0.30	0.070	0.040	L3	15682E3	-	-	45682E3
	10 000	21 x 38	2170	324	0.36	0.058	0.035	L3	15103E3	-	-	45103E3
25	47	4.5 x 10	80	6.4	0.14	4.800	2.600	L1	-	26479E3	36479E3	-
	100	6 x 10	150	9	0.14	2.300	1.200	L1	-	26101E3	36101E3	-
	150	8 x 11	190	12	0.14	1.500	0.800	L1	-	90534E3	90535E3	-
	150	6.5 x 18	210	12	0.14	1.500	0.800	L1	-	26151E3	36151E3	-
	220	6.5 x 18	250	15	0.14	1.000	0.550	L1	-	26221E3	36221E3	-
	330	8 x 18	340	21	0.14	0.680	0.360	L1	-	26331E3	36331E3	-
	470	10 x 18	450	28	0.14	0.480	0.260	L1	-	26471E3	36471E3	-
	680	10 x 25	560	38	0.14	0.330	0.180	L1	-	90527E3	90528E3	-
	680	10 x 30	640	38	0.14	0.323	0.175	L3	16681E3	26681E3	-	-
	1000	12.5 x 30	840	54	0.14	0.220	0.095	L3	16102E3	26102E3	-	-
	1500	12.5 x 30	950	79	0.17	0.179	0.095	L3	16152E3	26152E3	-	-
	2200	15 x 30	1180	114	0.19	0.132	0.070	L3	16222E3	26222E3	-	46222E3
	3300	18 x 30	1470	169	0.21	0.099	0.065	L3	16332E3	-	-	46332E3
	4700	18 x 38	1920	239	0.23	0.079	0.040	L3	16472E3	-	-	46472E3
	6800	21 x 38	2070	344	0.28	0.064	0.035	L3	16682E3	-	-	46682E3

For technical questions, contact: aluminumcaps1@vishay.com

THIS DOCUMENT IS SUBJECT TO CHANGE WITHOUT NOTICE. THE PRODUCTS DESCRIBED HEREIN AND THIS DOCUMENT ARE SUBJECT TO SPECIFIC DISCLAIMERS, SET FORTH AT www.vishay.com/doc?91000

chanhvinh.com

ELECTRICAL DATA AND ORDERING INFORMATION

U_R (V)	C_R 100 Hz (µF)	NOMINAL CASE SIZE Ø D x L (mm)	I_R 100 Hz 85 °C (mA)	I_{L5} 5 min (µA)	tan δ 100 Hz	ESR 100 Hz (Ω)	Z 10 kHz (Ω)	LIFE CODE (1)	ORDERING CODE MAL2021..... IN BOX FORM AA	TAPED ON REEL FORM BR	TAPED IN BOX FORM BA	MOUNTING RING FORM MR
40	22	4.5 x 10	60	5.8	0.11	8.000	3.200	L2	-	27229E3	37229E3	-
	47	6 x 10	110	7.8	0.11	3.800	1.500	L2	-	27479E3	37479E3	-
	100	8 x 11	170	12	0.11	1.800	0.700	L2	-	90537E3	90538E3	-
	100	6.5 x 18	190	12	0.11	1.800	0.700	L2	-	27101E3	37101E3	-
	150	8 x 18	250	16	0.11	1.100	0.470	L2	-	27151E3	37151E3	-
	220	10 x 18	330	22	0.11	0.800	0.320	L2	-	27221E3	37221E3	-
	330	10 x 25	430	30	0.11	0.530	0.210	L2	-	27331E3	37331E3	-
	470	10 x 25	520	42	0.11	0.370	0.180	L2	-	90514E3	90515E3	-
	470	10 x 30	590	42	0.12	0.404	0.175	L3	17471E3	27471E3	-	-
	680	12.5 x 30	800	58	0.12	0.297	0.110	L3	17681E3	27681E3	-	-
	1000	12.5 x 30	900	84	0.12	0.190	0.110	L3	17102E3	27102E3	-	-
	1500	15 x 30	1120	124	0.15	0.159	0.070	L3	17152E3	27152E3	-	47152E3
	2200	18 x 30	1390	180	0.17	0.118	0.065	L3	17222E3	-	-	47222E3
	3300	18 x 38	1810	268	0.19	0.090	0.040	L3	17332E3	-	-	47332E3
	4700	21 x 38	1940	380	0.21	0.072	0.035	L3	17472E3	-	-	47472E3
63	1.0	4.5 x 10	12	4.1	0.09	150.0	55.00	L2	-	28108E3	38108E3	-
	2.2	4.5 x 10	21	4.3	0.09	65.00	25.00	L2	-	28228E3	38228E3	-
	3.3	4.5 x 10	25	4.4	0.09	44.00	17.00	L2	-	28338E3	38338E3	-
	4.7	4.5 x 10	31	4.6	0.09	31.00	12.00	L2	-	28478E3	38478E3	-
	10	4.5 x 10	50	5.3	0.08	13.00	5.500	L2	-	28109E3	38109E3	-
	15	4.5 x 10	55	5.9	0.08	8.500	3.700	L2	-	28159E3	38159E3	-
	22	6 x 10	90	6.8	0.08	5.800	2.500	L2	-	28229E3	38229E3	-
	33	6 x 10	100	8.2	0.08	3.900	1.700	L2	-	28339E3	38339E3	-
	47	8 x 11	140	10	0.08	2.700	1.200	L2	-	90541E3	90542E3	-
	47	6.5 x 18	150	10	0.08	2.700	1.200	L2	-	28479E3	38479E3	-
	68	8 x 11	160	13	0.08	1.900	0.810	L2	-	90544E3	90545E3	-
	68	6.5 x 18	170	13	0.08	1.900	0.810	L2	-	28689E3	38689E3	-
	100	8 x 18	250	17	0.08	1.300	0.550	L2	-	28101E3	38101E3	-
	150	10 x 18	320	23	0.08	0.850	0.370	L2	-	28151E3	38151E3	-
	220	10 x 25	430	32	0.08	0.600	0.250	L2	-	90511E3	90512E3	-
	220	10 x 30	480	32	0.08	0.614	0.260	L3	18221E3	28221E3	-	-
	330	12.5 x 30	610	46	0.08	0.409	0.190	L3	18331E3	28331E3	-	-
	470	12.5 x 30	700	63	0.08	0.287	0.130	L3	18471E3	28471E3	-	-
	680	15 x 30	890	90	0.08	0.199	0.095	L3	18681E3	28681E3	-	48681E3
	1000	18 x 30	1170	130	0.08	0.135	0.075	L3	18102E3	-	-	48102E3
	1500	18 x 38	1530	193	0.11	0.122	0.045	L3	18152E3	-	-	48152E3
	2200	21 x 38	1780	281	0.13	0.099	0.040	L3	18222E3	-	-	48222E3
100	1.0	4.5 x 10	14	4.2	0.08	130.0	90.00	L2	-	29108E3	39108E3	-
	2.2	4.5 x 10	20	4.4	0.08	58.00	41.00	L2	-	29228E3	39228E3	-
	4.7	4.5 x 10	30	4.9	0.08	27.00	19.00	L2	-	29478E3	39478E3	-
	10	6 x 10	65	6	0.08	13.00	9.000	L2	-	29109E3	39109E3	-
	15	8 x 11	77	7	0.08	8.500	6.000	L2	-	90547E3	90548E3	-
	15	6.5 x 18	85	7	0.08	8.500	6.000	L2	-	29159E3	39159E3	-
	22	8 x 11	95	8.4	0.08	5.800	4.100	L2	-	90551E3	90552E3	-
	22	6.5 x 18	100	8.4	0.08	5.800	4.100	L2	-	29229E3	39229E3	-
	33	6.5 x 18	120	10.6	0.08	3.900	2.700	L2	-	29339E3	39339E3	-
	47	8 x 18	160	13.4	0.08	2.700	1.900	L2	-	29479E3	39479E3	-
	68	10 x 18	220	17.6	0.08	1.900	1.300	L2	-	29689E3	39689E3	-
	100	10 x 25	300	24	0.08	1.300	0.900	L2	-	90531E3	90532E3	-
	100	10 x 30	340	24	0.07	1.150	1.000	L3	19101E3	29101E3	-	-
	150	12.5 x 30	490	34	0.07	0.645	0.610	L3	19151E3	29151E3	-	-
	220	12.5 x 30	560	48	0.08	0.610	0.560	L3	19221E3	29221E3	-	-
	330	15 x 30	740	70	0.09	0.420	0.400	L3	19331E3	29331E3	-	49331E3
	470	18 x 30	980	98	0.09	0.310	0.290	L3	19471E3	-	-	49471E3
	680	18 x 38	1260	140	0.09	0.195	0.180	L3	19681E3	-	-	49681E3
	1000	21 x 38	1470	204	0.10	0.160	0.150	L3	19102E3	-	-	49102E3

Note

(1) Determines the applicable row in the table “Endurance Test Duration and Useful Life”

For technical questions, contact: aluminumcaps1@vishay.com
THIS DOCUMENT IS SUBJECT TO CHANGE WITHOUT NOTICE. THE PRODUCTS DESCRIBED HEREIN AND THIS DOCUMENT ARE SUBJECT TO SPECIFIC DISCLAIMERS, SET FORTH AT www.vishay.com/doc?91000

chanhvinh.com

ADDITIONAL ELECTRICAL DATA			
PARAMETER	CONDITIONS	VALUE	
		AXIAL	MOUNTING RING
Voltage			
Surge voltage		$U_s \leq 1.15 \times U_R$	
Reverse voltage		$U_{rev} \leq 1$ V	
Current			
Leakage current	After 1 min at U_R	$I_{L1} \leq 0.006\ C_R \times U_R + 4\ \mu A$	
	After 5 min at U_R	$I_{L5} \leq 0.002\ C_R \times U_R + 4\ \mu A$	
Inductance			
Equivalent series inductance (ESL)	Case Ø D x L mm:		
	4.5 x 10	Typ. 10 nH	-
	6 x 10	Typ. 22 nH	-
	8 x 11	Typ. 85 nH	-
	6.5 x 18	Typ. 25 nH	-
	8 x 18	Typ. 40 nH	-
	10 x 18	Typ. 61 nH	-
	10 x 25	Typ. 38 nH	-
	10 x 30	Typ. 38 nH	-
	12.5 x 30	Typ. 46 nH	-
	15 x 30	Typ. 48 nH	Typ. 39 nH
	18 x 30	Typ. 50 nH	Typ. 39 nH
	18 x 38	Typ. 54 nH	Typ. 39 nH
	21 x 38	Typ. 59 nH	Typ. 39 nH

RIPPLE CURRENT AND USEFUL LIFE

Table 4

ENDURANCE TEST DURATION AND USEFUL LIFE			
LIFE CODE	ENDURANCE AT 85 °C (h)	ENDURANCE AT 105 °C (h)	USEFUL LIFE AT 85 °C (h)
L1	1000	-	2500
L2	2000	-	2500
L3	5000	2000	8000

Note

- Multiplier of useful life code: CCC205

For technical questions, contact: aluminumcaps1@vishay.com
THIS DOCUMENT IS SUBJECT TO CHANGE WITHOUT NOTICE. THE PRODUCTS DESCRIBED HEREIN AND THIS DOCUMENT ARE SUBJECT TO SPECIFIC DISCLAIMERS, SET FORTH AT www.vishay.com/doc?91000

chanhvinh.com

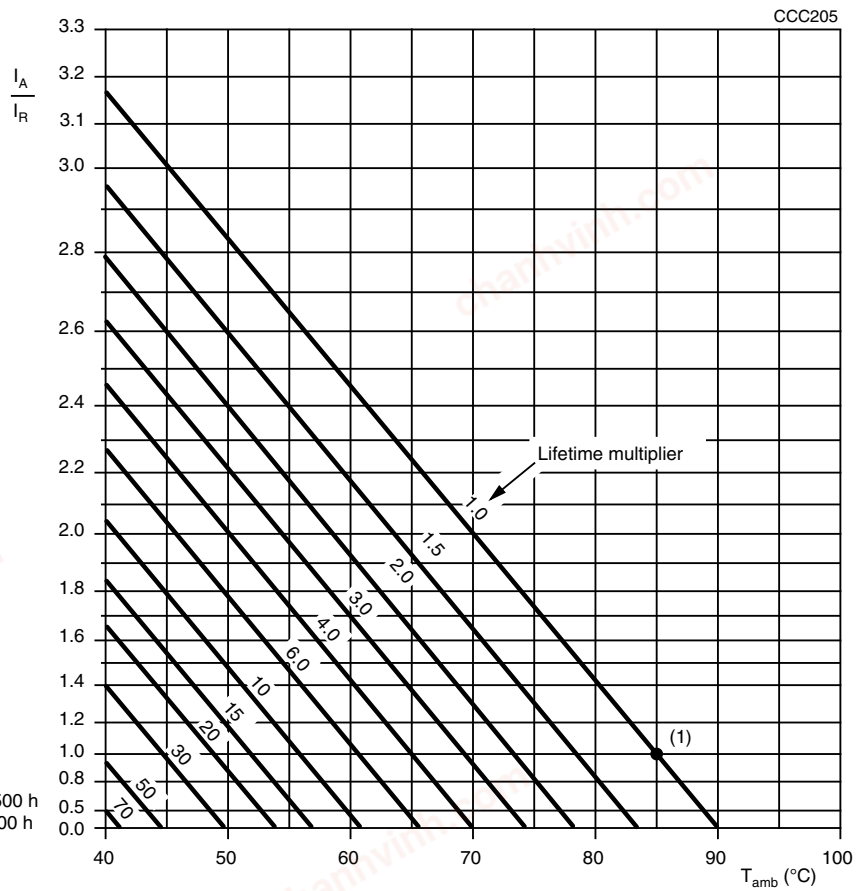

I_A = Actual ripple current at 100 Hz
I_R = Rated ripple current at 100 Hz, 85 °C

(1) Useful life at 85 °C and I_R applied:
Case Ø D x L = 4.5 mm x 10 mm to 10 mm x 25 mm: 2500 h
Case Ø D x L = 10 mm x 30 mm to 21 mm x 38 mm: 8000 h

Fig. 6 - Multiplier of useful life as a function of ambient temperature and ripple current load

Table 5

MULTIPLIER OF RIPPLE CURRENT (I_R) AS A FUNCTION OF FREQUENCY						
U_R	FREQUENCY (Hz)					
	50	100	300	1000	3000	≥ 10 000
	I_R MULTIPLIER					
6.3	0.95	1.00	1.07	1.12	1.15	1.20
10	0.95	1.00	1.07	1.12	1.15	1.20
16	0.95	1.00	1.07	1.12	1.15	1.20
25	0.90	1.00	1.12	1.20	1.25	1.30
40	0.90	1.00	1.12	1.20	1.25	1.30
63	0.85	1.00	1.20	1.30	1.35	1.40
100	0.85	1.00	1.20	1.30	1.35	1.40

For technical questions, contact: aluminumcaps1@vishay.com
THIS DOCUMENT IS SUBJECT TO CHANGE WITHOUT NOTICE. THE PRODUCTS DESCRIBED HEREIN AND THIS DOCUMENT ARE SUBJECT TO SPECIFIC DISCLAIMERS, SET FORTH AT www.vishay.com/doc?91000

chanhvinh.com

Table 6

TEST PROCEDURES AND REQUIREMENTS			
TEST		**PROCEDURE (quick reference)**	**REQUIREMENTS**
NAME OF TEST	**REFERENCE**		
Endurance	IEC 60384-4 / EN130300 subclause 4.13	T_{amb} = 85 °C; U_R applied; case Ø D x L = 4.5 mm x 10 mm to 10 mm x 25 mm: U_R = 6.3 V to 25 V: 1000 h; U_R = 40 V to 100 V: 2000 h; case Ø D x L = 10 mm x 30 m to 21 mm x 38 mm: U_R = 6.3 V to 100 V: 5000 h	$U_R \leq$ 6.3 V; ΔC/C: +15 % / -30 % U_R > 6.3 V; ΔC/C: ± 15 % tan δ ≤ 1.3 x spec. limit Z ≤ 2 x spec. limit $I_{L5} \leq$ spec. limit
		T_{amb} = 105 °C; U_R applied; case Ø D x L = 10 mm x 30 mm to 21 mm x 38 mm: 2000 h	ΔC/C: ≤ ± 20 % tan δ ≤ 1.6 x spec. limit Z ≤ 2 x spec. limit $I_{L5} \leq$ spec. limit
Useful life	CECC 30301 subclause 1.8.1	T_{amb} = 85 °C; U_R and I_R applied; case Ø D x L = 4.5 mm x 10 mm to 10 mm x 25 mm: 2500 h; case Ø D x L = 10 mm x 30 mm to 21 mm x 38 mm: 8000 h	$U_R \leq$ 6.3 V; ΔC/C: +45 % / -50 % U_R > 6.3 V; ΔC/C: ± 45 % tan δ ≤ 3 x spec. limit Z ≤ 3 x spec. limit $I_{L5} \leq$ spec. limit no short or open circuit total failure percentage: ≤ 1 %
Shelf life (storage at high temperature)	IEC 60384-4 / EN130300 subclause 4.17	T_{amb} = 85 °C; no voltage applied; 500 h After test: U_R to be applied for 30 min, 24 h to 48 h before measurement	ΔC/C, tan δ, Z: for requirements see “Endurance test” above $I_{L5} \leq$ 2 x spec. limit

Statements about product lifetime are based on calculations and internal testing. They should only be interpreted as estimations. Also due to external factors, the lifetime in the field application may deviate from the calculated lifetime. In general, nothing stated herein shall be construed as a guarantee of durability.

For technical questions, contact: aluminumcaps1@vishay.com
THIS DOCUMENT IS SUBJECT TO CHANGE WITHOUT NOTICE. THE PRODUCTS DESCRIBED HEREIN AND THIS DOCUMENT ARE SUBJECT TO SPECIFIC DISCLAIMERS, SET FORTH AT www.vishay.com/doc?91000

chanhvinh.com

Disclaimer

ALL PRODUCT, PRODUCT SPECIFICATIONS AND DATA ARE SUBJECT TO CHANGE WITHOUT NOTICE TO IMPROVE RELIABILITY, FUNCTION OR DESIGN OR OTHERWISE.

Vishay Intertechnology, Inc., its affiliates, agents, and employees, and all persons acting on its or their behalf (collectively, “Vishay”), disclaim any and all liability for any errors, inaccuracies or incompleteness contained in any datasheet or in any other disclosure relating to any product.

Vishay makes no warranty, representation or guarantee regarding the suitability of the products for any particular purpose or the continuing production of any product. To the maximum extent permitted by applicable law, Vishay disclaims (i) any and all liability arising out of the application or use of any product, (ii) any and all liability, including without limitation special, consequential or incidental damages, and (iii) any and all implied warranties, including warranties of fitness for particular purpose, non-infringement and merchantability.

Statements regarding the suitability of products for certain types of applications are based on Vishay's knowledge of typical requirements that are often placed on Vishay products in generic applications. Such statements are not binding statements about the suitability of products for a particular application. It is the customer's responsibility to validate that a particular product with the properties described in the product specification is suitable for use in a particular application. Parameters provided in datasheets and / or specifications may vary in different applications and performance may vary over time. All operating parameters, including typical parameters, must be validated for each customer application by the customer's technical experts. Product specifications do not expand or otherwise modify Vishay's terms and conditions of purchase, including but not limited to the warranty expressed therein.

Hyperlinks included in this datasheet may direct users to third-party websites. These links are provided as a convenience and for informational purposes only. Inclusion of these hyperlinks does not constitute an endorsement or an approval by Vishay of any of the products, services or opinions of the corporation, organization or individual associated with the third-party website. Vishay disclaims any and all liability and bears no responsibility for the accuracy, legality or content of the third-party website or for that of subsequent links.

Except as expressly indicated in writing, Vishay products are not designed for use in medical, life-saving, or life-sustaining applications or for any other application in which the failure of the Vishay product could result in personal injury or death. Customers using or selling Vishay products not expressly indicated for use in such applications do so at their own risk. Please contact authorized Vishay personnel to obtain written terms and conditions regarding products designed for such applications.

No license, express or implied, by estoppel or otherwise, to any intellectual property rights is granted by this document or by any conduct of Vishay. Product names and markings noted herein may be trademarks of their respective owners.

© 2023 VISHAY INTERTECHNOLOGY, INC. ALL RIGHTS RESERVED