chanhvinh.com

Optocoupler, Phototriac Output, High dV/dt, Low Input Current

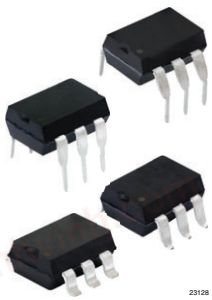

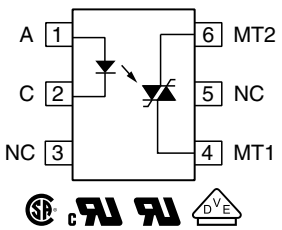

FEATURES

- Low trigger current I_{FT} = 1 mA (typ.)
- I_{TRMS} = 300 mA
- High static dV/dt ≥ 10 000 V/µs
- Load voltage up to 800 V
- Material categorization: for definitions of compliance please see www.vishay.com/doc?99912

Pb-free

e3

RoHS COMPLIANT

LINKS TO ADDITIONAL RESOURCES

3D Models | Design Tools | Related Documents | SPICE Models | Footprints | Schematics

APPLICATIONS

- Solid state relays
- Industrial controls
- Office equipment
- Consumer appliances

AGENCY APPROVALS

- UL / cUL 1577
- CSA
- DIN EN 60747-5-5 (VDE 0884-5), available with option 1
- FIMKO

DESCRIPTION

The IL420 and IL4208 consists of an optically coupled GaAs IRLED to a photosensitive thyristor system with integrated noise suppression and non-zero crossing functionality. The thyristor system enables low trigger currents of 1 mA and features a dV/dt ratio of greater than 10 kV/µs and load voltages up to 800 V.

The IL420 and IL4208 are a perfect microcontroller friendly solution to isolate low-voltage logic from high voltage 120 V_{AC}, 240 V_{AC}, and 380 V_{AC} lines and to control resistive, inductive, or capacitive AC loads like motors, solenoids, high power thyristors, or TRIACs and solid-state relays.

ORDERING INFORMATION

I	L	4	2	0	#	-	X	0	#	#	T
PART NUMBER							PACKAGE OPTION				TAPE AND REEL

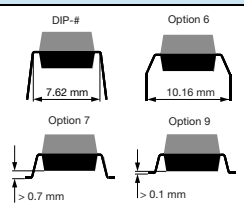

AGENCY CERTIFIED / PACKAGE	PEAK OFF-STATE VOLTAGE V_{DRM} (V)	
UL, cUL, CQC	**600**	**800**
DIP-6	IL420	IL4208
DIP-6, 400 mil, option 6	IL420-X006	-
SMD-6, option 7	IL420-X007T (1)	IL4208-X007T (1)
SMD-6, option 9	IL420-X009T (1)	IL4208-X009T (1)
VDE, UL, cUL, CQC	**600**	**800**
DIP-6	IL420-X001	-
DIP-6, 400 mil, option 6	IL420-X016	-
SMD-6, option 7	IL420-X017T (1)	IL4208-X017T

Note

(1) Also available in tubes, do not put T on the end

- Additional options may be possible, please contact sales office

For technical questions, contact: optocoupleranswers@vishay.com

THIS DOCUMENT IS SUBJECT TO CHANGE WITHOUT NOTICE. THE PRODUCTS DESCRIBED HEREIN AND THIS DOCUMENT ARE SUBJECT TO SPECIFIC DISCLAIMERS, SET FORTH AT www.vishay.com/doc?91000

chanhvinh.com

ABSOLUTE MAXIMUM RATINGS (T_{amb} = 25 °C, unless otherwise specified)					
PARAMETER	**TEST CONDITION**	**PART**	**SYMBOL**	**VALUE**	**UNIT**
INPUT					
Reverse voltage			V_R	6	V
Forward current			I_F	60	mA
Surge current			I_{FSM}	2.5	A
Power dissipation			P_{diss}	100	mW
Derate from 25 °C				1.33	mW/°C
OUTPUT					
Peak off-state voltage		IL420	V_{DRM}	600	V
		IL4208	V_{DRM}	800	V
RMS on-state current			I_{TM}	300	mA
Single cycle surge current			I_{TSM}	3	A
Power dissipation			P_{diss}	500	mW
Derate from 25 °C				6.6	mW/°C
COUPLER					
Storage temperature range			T_{stg}	-55 to +150	°C
Ambient temperature range			T_{amb}	-55 to +100	°C
Soldering temperature	max. ≤ 10 s dip soldering ≥ 0.5 mm from case bottom		T_{sld}	260	°C

Note

- Stresses in excess of the absolute maximum ratings can cause permanent damage to the device. Functional operation of the device is not implied at these or any other conditions in excess of those given in the operational sections of this document. Exposure to absolute maximum ratings for extended periods of the time can adversely affect reliability

ELECTRICAL CHARACTERISTICS (T_{amb} = 25 °C, unless otherwise specified)						
PARAMETER	**TEST CONDITION**	**SYMBOL**	**MIN.**	**TYP.**	**MAX.**	**UNIT**
INPUT						
Forward voltage	I_F = 10 mA	V_F	-	1.16	1.35	V
Reverse current	V_R = 6 V	I_R	-	0.1	10	µA
Input capacitance	V_F = 0 V, f = 1 MHz	C_{IN}	-	40	-	pF
Thermal resistance, junction to ambient		R_{thja}	-	750	-	°C/W
OUTPUT						
Off-state current	$V_D = V_{DRM}$, T_{amb} = 100 °C	I_{DRM}	-	10	100	µA
On-state voltage	I_T = 300 mA	V_{TM}	-	1.7	3	V
Surge (non-repetitive), on-state current	f = 50 Hz	I_{TSM}	-	-	3	A
Holding current		I_H	-	65	500	µA
Latching current	V_T = 2.2 V	I_L	-		500	µA
LED trigger current	V_D = 5 V	I_{FT}	-	1	2	mA
Trigger current temperature gradient		$\Delta I_{FT}/\Delta T_j$	-	7	14	µA/°C
Critical rate of rise off-state voltage	V_D = 0.67 V_{DRM}, T_j = 25 °C	dV/dt_{cr}	10 000	-	-	V/µs
	V_D = 0.67 V_{DRM}, T_j = 80 °C	dV/dt_{cr}	5000	-	-	V/µs
Critical rate of rise of voltage at current commutation	V_D = 230 V_{RMS}, I_D = 300 mA_{RMS}, T_J = 25 °C	dV/dt_{crq}	-	8	-	V/µs
	V_D = 230 V_{RMS}, I_D = 300 mA_{RMS}, T_J = 85 °C	dV/dt_{crq}	-	7	-	V/µs
Critical rate of rise of on-state current commutation		dI/dt_{crq}	-	12	-	A/ms
Thermal resistance, junction to ambient		R_{thja}	-	150	-	°C/W

For technical questions, contact: optocoupleranswers@vishay.com
THIS DOCUMENT IS SUBJECT TO CHANGE WITHOUT NOTICE. THE PRODUCTS DESCRIBED HEREIN AND THIS DOCUMENT ARE SUBJECT TO SPECIFIC DISCLAIMERS, SET FORTH AT www.vishay.com/doc?91000

chanhvinh.com

ELECTRICAL CHARACTERISTICS (T_{amb} = 25 °C, unless otherwise specified)						
PARAMETER	**TEST CONDITION**	**SYMBOL**	**MIN.**	**TYP.**	**MAX.**	**UNIT**
COUPLER						
Critical rate of rise of coupled input / output voltage	I_T = 0 A, $V_{RM} = V_{DM} = V_{DRM}$	dV/dt	-	5000	-	V/µs
Capacitance (input to output)	f = 1 MHz, V_{IO} = 0 V	C_{IO}	-	0.8	-	pF

Note

- Minimum and maximum values are testing requirements. Typical values are characteristics of the device and are the result of engineering evaluation. Typical values are for information only and are not part of the testing requirements

SWITCHING CHARACTERISTICS (T_{amb} = 25 °C, unless otherwise specified)						
PARAMETER	**TEST CONDITION**	**SYMBOL**	**MIN.**	**TYP.**	**MAX.**	**UNIT**
Turn-on time	$V_{RM} = V_{DM} = V_{DRM}$	t_{on}	-	35	-	µs

SAFETY AND INSULATION RATINGS				
PARAMETER	**TEST CONDITION**	**SYMBOL**	**VALUE**	**UNIT**
Climatic classification	According to IEC 68 part 1		55 / 100 / 21	
Comparative tracking index		CTI	175	
Maximum rated withstanding isolation voltage	t = 1 min	V_{ISO}	4420	V_{RMS}
Maximum transient isolation voltage		V_{IOTM}	8000	V_{peak}
Maximum repetitive peak isolation voltage		V_{IORM}	890	V_{peak}
Isolation resistance	V_{IO} = 500 V, T_{amb} = 25 °C	R_{IO}	$\geq 10^{12}$	Ω
	V_{IO} = 500 V, T_{amb} = 100 °C	R_{IO}	$\geq 10^{11}$	Ω
Output safety power		P_{SO}	500	mW
Input safety current		I_{SI}	250	mA
Safety temperature		T_S	175	°C
Creepage distance	DIP-6; SMD-6, option 7; SMD-6 option 9		≥ 7	mm
Clearance distance			≥ 7	mm
Creepage distance	DIP-6, option 6		≥ 8	mm
Clearance distance			≥ 8	mm
Insulation thickness		DTI	≥ 0.4	mm

Note

- As per IEC 60747-5-5, § 7.4.3.8.2, this optocoupler is suitable for “safe electrical insulation” only within the safety ratings. Compliance with the safety ratings shall be ensured by means of protective circuits

TYPICAL CHARACTERISTICS (T_{amb} = 25 °C, unless otherwise specified)

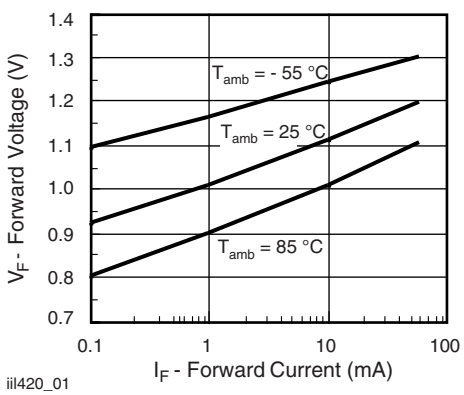

Fig. 1 - Forward Voltage vs. Forward Current

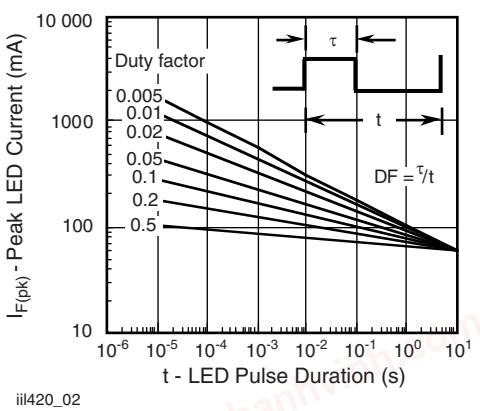

Fig. 2 - Peak LED Current vs. Duty Factor, τ

For technical questions, contact: optocoupleranswers@vishay.com
THIS DOCUMENT IS SUBJECT TO CHANGE WITHOUT NOTICE. THE PRODUCTS DESCRIBED HEREIN AND THIS DOCUMENT ARE SUBJECT TO SPECIFIC DISCLAIMERS, SET FORTH AT www.vishay.com/doc?91000

chanhvinh.com

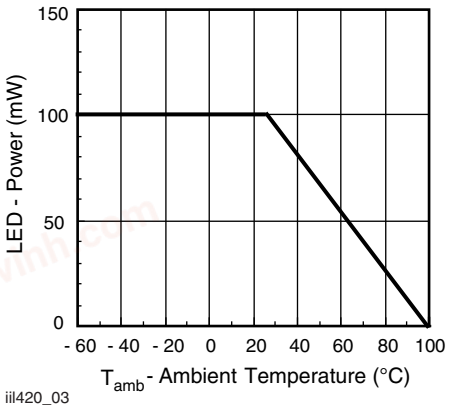

Fig. 3 - Maximum LED Power Dissipation

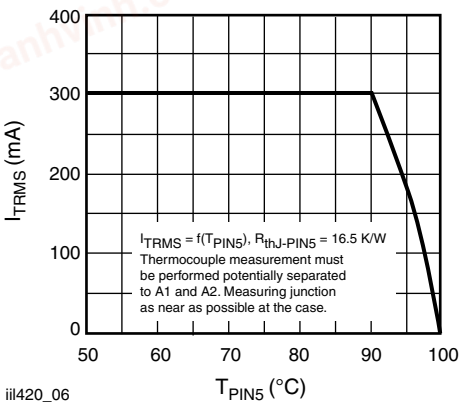

Fig. 6 - Current Reduction

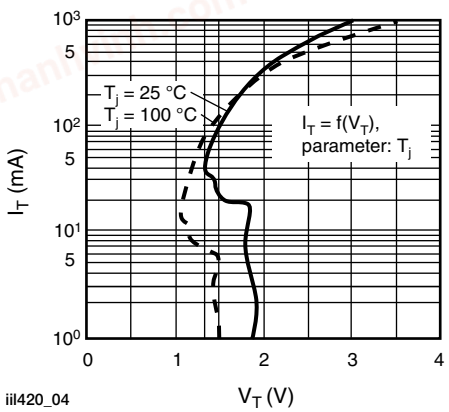

Fig. 4 - Typical Output Characteristics

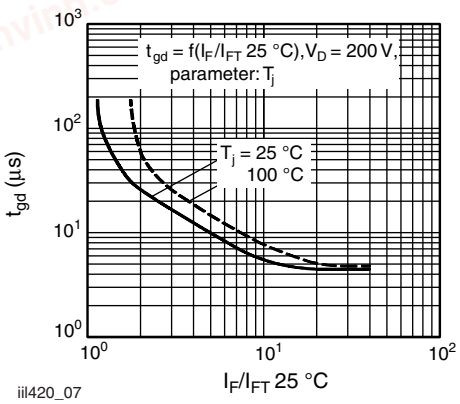

Fig. 7 - Typical Trigger Delay Time

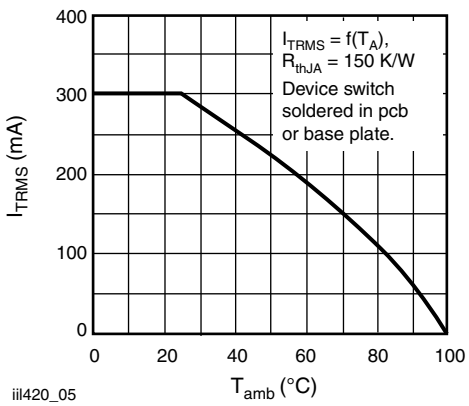

Fig. 5 - Current Reduction

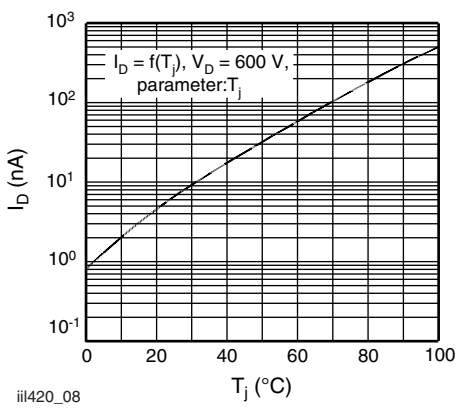

Fig. 8 - Typical Off-State Current

For technical questions, contact: optocoupleranswers@vishay.com
THIS DOCUMENT IS SUBJECT TO CHANGE WITHOUT NOTICE. THE PRODUCTS DESCRIBED HEREIN AND THIS DOCUMENT ARE SUBJECT TO SPECIFIC DISCLAIMERS, SET FORTH AT www.vishay.com/doc?91000

chanhvinh.com

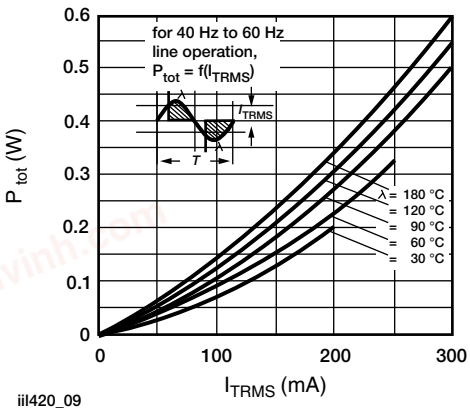

Fig. 9 - Power Dissipation

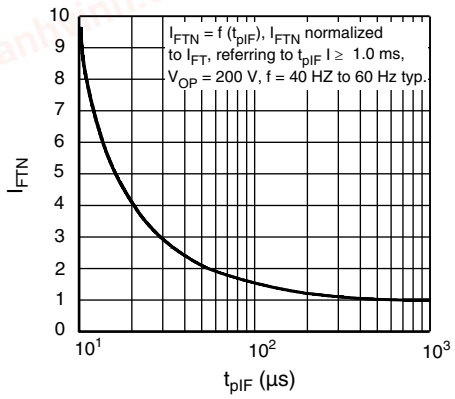

Fig. 10 - Pulse Trigger Current

PACKAGE DIMENSIONS in millimeters

DIP-6

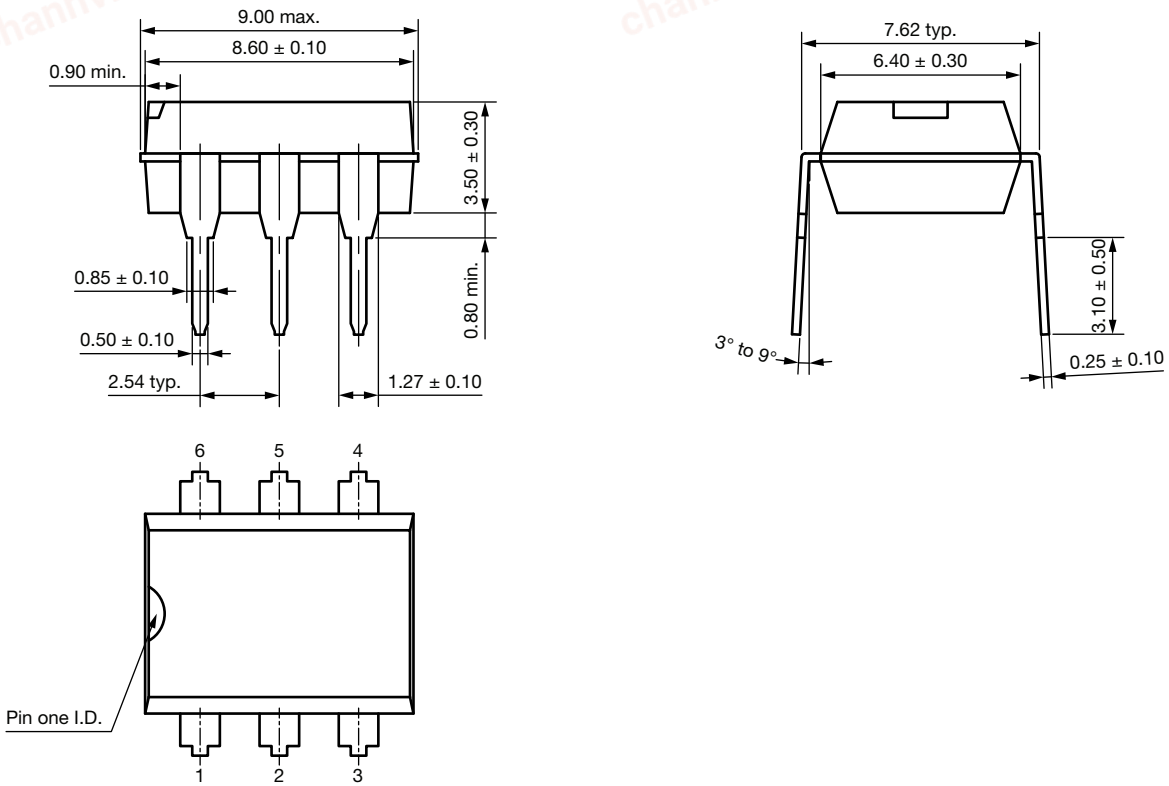

For technical questions, contact: optocoupleranswers@vishay.com
THIS DOCUMENT IS SUBJECT TO CHANGE WITHOUT NOTICE. THE PRODUCTS DESCRIBED HEREIN AND THIS DOCUMENT ARE SUBJECT TO SPECIFIC DISCLAIMERS, SET FORTH AT www.vishay.com/doc?91000

chanhvinh.com

DIP-6, 400 mil (option 6)

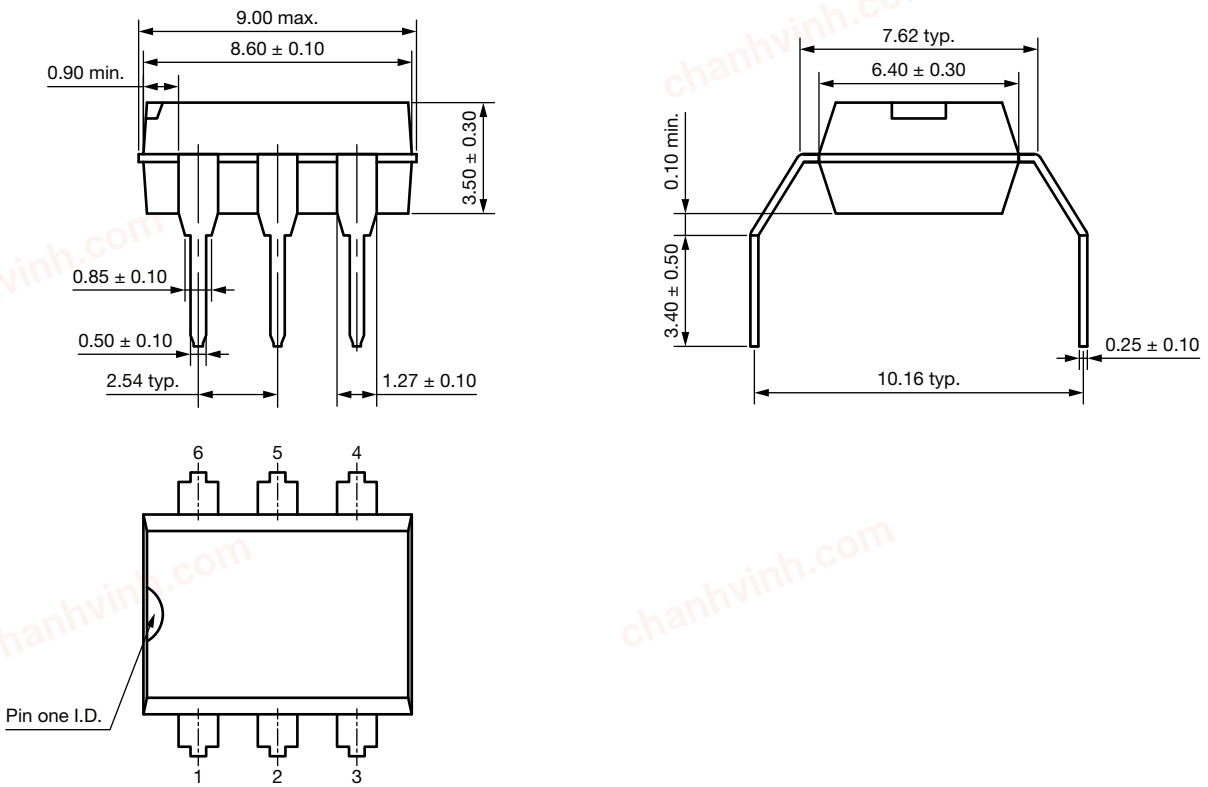

SMD-6 (option 7)

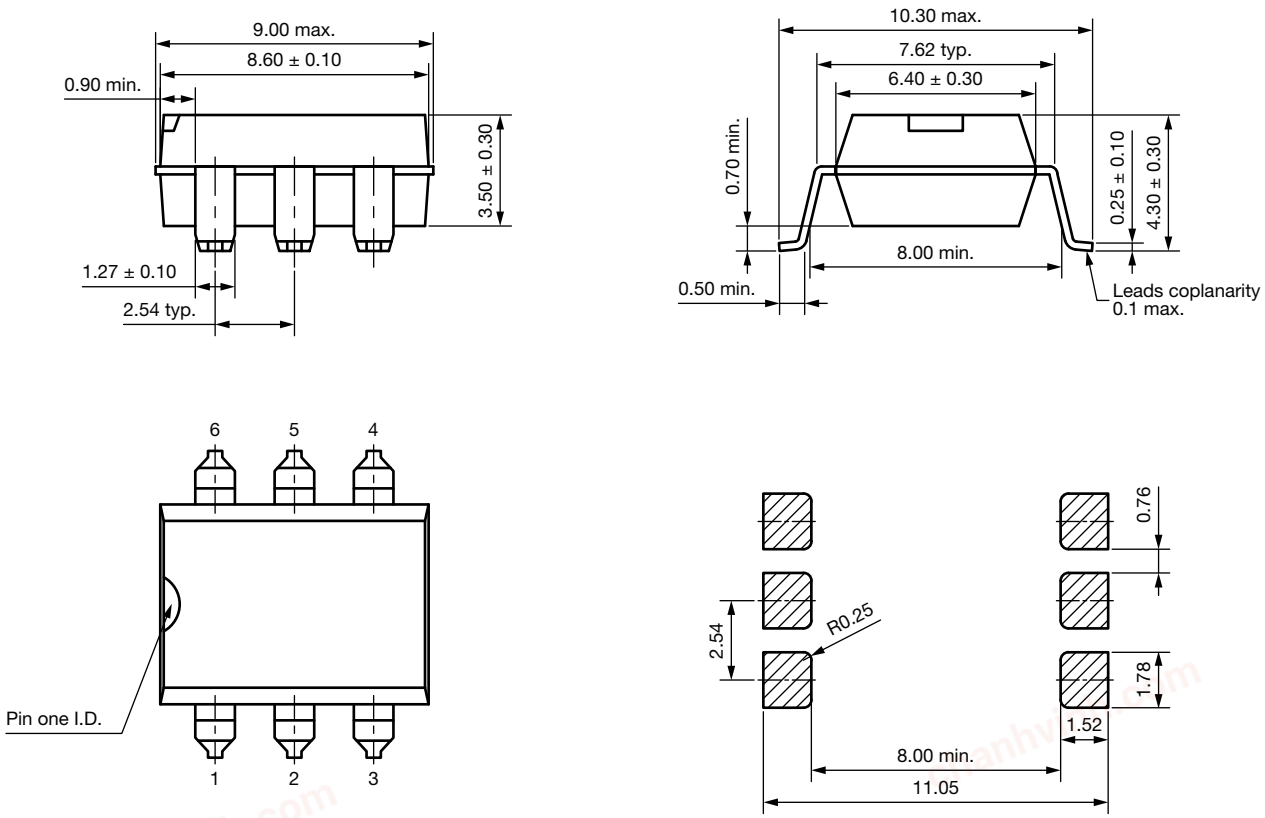

For technical questions, contact: optocoupleranswers@vishay.com
THIS DOCUMENT IS SUBJECT TO CHANGE WITHOUT NOTICE. THE PRODUCTS DESCRIBED HEREIN AND THIS DOCUMENT ARE SUBJECT TO SPECIFIC DISCLAIMERS, SET FORTH AT www.vishay.com/doc?91000

chanhvinh.com

SMD-6 (option 9)

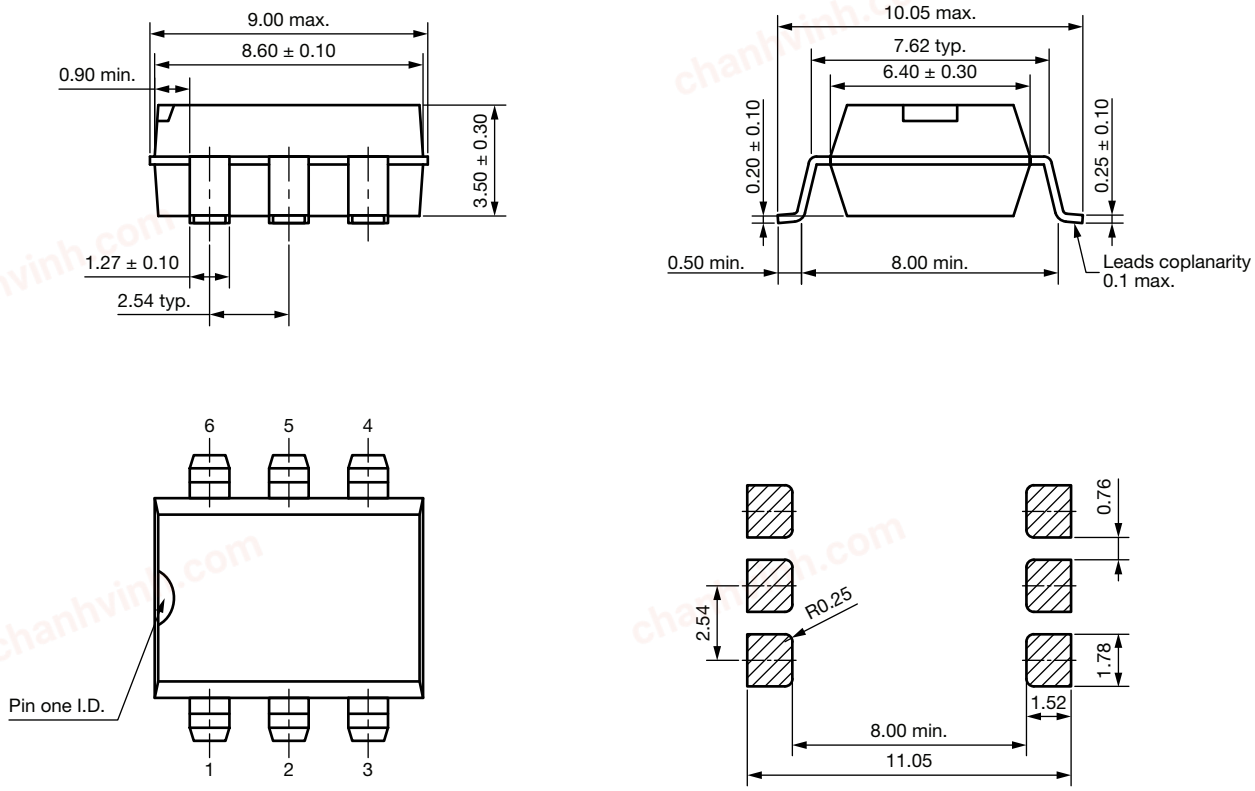

PACKAGE MARKING (example)

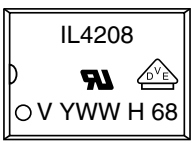

Fig. 11 - Example of IL4208-X017T

Notes

- "YWW" is the date code marking (Y = year code, WW = week code)
- VDE logo is only marked on option 1 parts
- Tape and reel suffix (T) is not part of the package marking

For technical questions, contact: optocoupleranswers@vishay.com

THIS DOCUMENT IS SUBJECT TO CHANGE WITHOUT NOTICE. THE PRODUCTS DESCRIBED HEREIN AND THIS DOCUMENT ARE SUBJECT TO SPECIFIC DISCLAIMERS, SET FORTH AT www.vishay.com/doc?91000

chanhvinh.com

SOLDER PROFILES

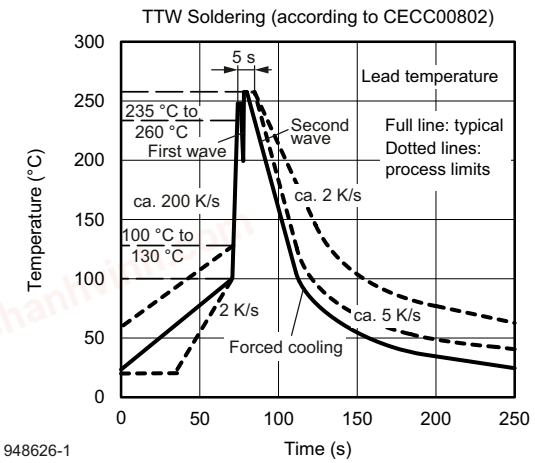

Fig. 12 - Wave Soldering Double Wave Profile
According to J-STD-020 for DIP Devices

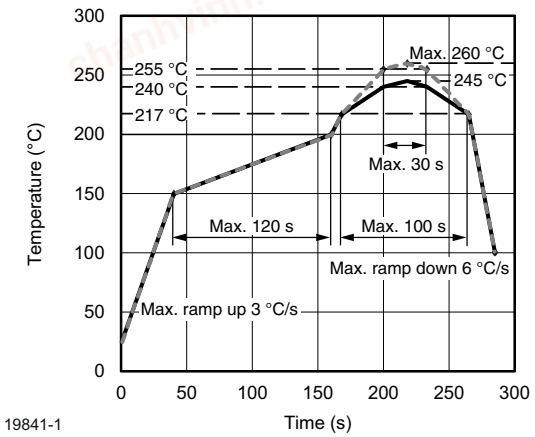

Fig. 13 - Lead (Pb)-free Reflow Solder Profile
According to J-STD-020 for SMD Devices

HANDLING AND STORAGE CONDITIONS

ESD level: HBM class 2

Floor life: unlimited

Conditions: T_{amb} < 30 °C, RH < 85 %

Moisture sensitivity level 1, according to J-STD-020

For technical questions, contact: optocoupleranswers@vishay.com
THIS DOCUMENT IS SUBJECT TO CHANGE WITHOUT NOTICE. THE PRODUCTS DESCRIBED HEREIN AND THIS DOCUMENT ARE SUBJECT TO SPECIFIC DISCLAIMERS, SET FORTH AT www.vishay.com/doc?91000

chanhvinh.com

Disclaimer

ALL PRODUCT, PRODUCT SPECIFICATIONS AND DATA ARE SUBJECT TO CHANGE WITHOUT NOTICE TO IMPROVE RELIABILITY, FUNCTION OR DESIGN OR OTHERWISE.

Vishay Intertechnology, Inc., its affiliates, agents, and employees, and all persons acting on its or their behalf (collectively, “Vishay”), disclaim any and all liability for any errors, inaccuracies or incompleteness contained in any datasheet or in any other disclosure relating to any product.

Vishay makes no warranty, representation or guarantee regarding the suitability of the products for any particular purpose or the continuing production of any product. To the maximum extent permitted by applicable law, Vishay disclaims (i) any and all liability arising out of the application or use of any product, (ii) any and all liability, including without limitation special, consequential or incidental damages, and (iii) any and all implied warranties, including warranties of fitness for particular purpose, non-infringement and merchantability.

Statements regarding the suitability of products for certain types of applications are based on Vishay's knowledge of typical requirements that are often placed on Vishay products in generic applications. Such statements are not binding statements about the suitability of products for a particular application. It is the customer's responsibility to validate that a particular product with the properties described in the product specification is suitable for use in a particular application. Parameters provided in datasheets and / or specifications may vary in different applications and performance may vary over time. All operating parameters, including typical parameters, must be validated for each customer application by the customer's technical experts. Product specifications do not expand or otherwise modify Vishay's terms and conditions of purchase, including but not limited to the warranty expressed therein.

Hyperlinks included in this datasheet may direct users to third-party websites. These links are provided as a convenience and for informational purposes only. Inclusion of these hyperlinks does not constitute an endorsement or an approval by Vishay of any of the products, services or opinions of the corporation, organization or individual associated with the third-party website. Vishay disclaims any and all liability and bears no responsibility for the accuracy, legality or content of the third-party website or for that of subsequent links.

Except as expressly indicated in writing, Vishay products are not designed for use in medical, life-saving, or life-sustaining applications or for any other application in which the failure of the Vishay product could result in personal injury or death. Customers using or selling Vishay products not expressly indicated for use in such applications do so at their own risk. Please contact authorized Vishay personnel to obtain written terms and conditions regarding products designed for such applications.

No license, express or implied, by estoppel or otherwise, to any intellectual property rights is granted by this document or by any conduct of Vishay. Product names and markings noted herein may be trademarks of their respective owners.

© 2021 VISHAY INTERTECHNOLOGY, INC. ALL RIGHTS RESERVED