chanhvinh.com

Optocoupler, Phototransistor Output, with Base Connection

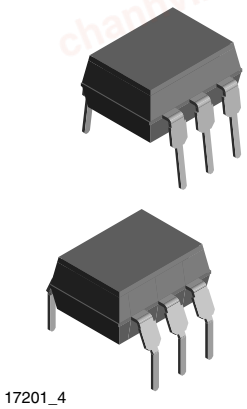

17201_4

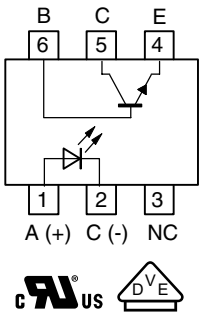

18537_5

FEATURES

- Isolation materials according to UL94-VO
- Pollution degree 2 (DIN/VDE 0110/resp. IEC 60664)
- Special construction: therefore, extra low coupling capacity of typical 0.3 pF, high common mode rejection
- Low temperature coefficient of CTR
- Climatic classification 55/100/21 (IEC 60068 part 1)
- Rated impulse voltage (transient overvoltage) V_{IOTM} = 6 kV peak
- Isolation test voltage (partial discharge test voltage) V_{pd} = 1.6 kV
- Rated isolation voltage (RMS includes DC) V_{IOWM} = 600 V_{RMS}
- Rated recurring peak voltage (repetitive) V_{IORM} = 600 V_{RMS} (848 V peak)
- Creepage current resistance according to VDE 0303/ IEC 60112 comparative tracking index: CTI = 275
- Thickness through insulation ≥ 0.75 mm
- Compliant to RoHS directive 2002/95/EC and in accordance to WEEE 2002/96/EC

Pb-free

e3

RoHS COMPLIANT

DESCRIPTION

The CQY80N(G) series consist of a phototransistor optically coupled to a gallium arsenide infrared-emitting diode in a 6 pin plastic dual inline package.

AGENCY APPROVALS

- UL1577, file no. E52744, double protection
- BSI: BS EN 41003, BS EN 60065, BS EN 60950
- DIN EN 60747-5-5 (VDE 0884)
- FIMKO (SETI): EN 60950, certificate no. FI25155

APPLICATIONS

- Switch-mode power supplies
- Line receiver
- Computer peripheral interface
- Microprocessor system interface
- Circuits for safe protective separation against electrical shock according to safety class II (reinforced isolation):
  - for appl. class I - IV at mains voltage ≤ 300 V
  - for appl. class I - III at mains voltage ≤ 600 V
  according to DIN EN 60747-5-5 (VDE 0884)

ORDER INFORMATION

PART	REMARKS
CQY80N	CTR > 50 %, DIP-6
CQY80NG	CTR > 50 %, DIP-6

Note

G = leadform 10.16 mm; G is not marked on the body.

chanhvinh.com

CQY80N, CQY80NG

Vishay Semiconductors — Optocoupler, Phototransistor Output, with Base Connection

ABSOLUTE MAXIMUM RATINGS (1)				
PARAMETER	**TEST CONDITION**	**SYMBOL**	**VALUE**	**UNIT**
INPUT				
Reverse voltage		V_R	5	V
Forward current		I_F	60	mA
Power dissipation		P_{diss}	70	mW
Junction temperature		T_j	125	°C
Forward surge current	$t_p \leq 10$ µs	I_{FSM}	1.5	A
OUTPUT				
Collector emitter voltage		V_{CEO}	32	V
Emitter collector voltage		V_{ECO}	7	V
Collector current		I_C	50	mA
Collector peak current	$t_p/T = 0.5$, $t_p \leq 10$ ms	I_{CM}	100	mA
Power dissipation		P_{diss}	70	mW
Junction temperature		T_j	125	°C
COUPLER				
Isolation test voltage (RMS)	t = 1 min	V_{ISO}	5000	V_{RMS}
Total power dissipation		P_{tot}	250	mW
Ambient temperature range		T_{amb}	- 55 to + 100	°C
Storage temperature range		T_{stg}	- 55 to + 125	°C
Soldering temperature (2)	2 mm from case, t ≤ 10 s	T_{sld}	260	°C

Notes

(1) T_{amb} = 25 °C, unless otherwise specified.
Stresses in excess of the absolute maximum ratings can cause permanent damage to the device. Functional operation of the device is not implied at these or any other conditions in excess of those given in the operational sections of this document. Exposure to absolute maximum ratings for extended periods of the time can adversely affect reliability.

(2) Refer to wave profile for soldering conditions for through hole devices.

ELECTRICAL CHARACTERISTCS						
PARAMETER	**TEST CONDITION**	**SYMBOL**	**MIN.**	**TYP.**	**MAX.**	**UNIT**
INPUT						
Forward voltage	I_F = 50 mA	V_F		1.25	1.6	V
Junction capacitance	V_R = 0 V, f = 1 MHz	C_j		50		pF
OUTPUT						
Collector emitter voltage	I_C = 1 mA	V_{CEO}	32			V
Emitter collector voltage	I_E = 100 µA	V_{ECO}	7			V
Collector emitter leakage current	V_{CE} = 20 V, I_F = 0 A, E = 0	I_{CEO}		10	200	nA
COUPLER						
Collector emitter saturation voltage	I_F = 10 mA, I_C = 1 mA	V_{CEsat}			0.3	V
Cut-off frequency	V_{CE} = 5 V, I_F = 10 mA, R_L = 100 Ω	f_c		110		kHz
Coupling capacitance	f = 1 MHz	C_k		0.3		pF

Note

T_{amb} = 25 °C, unless otherwise specified.
Minimum and maximum values were tested requierements. Typical values are characteristics of the device and are the result of engineering evaluations. Typical values are for information only and are not part of the testing requirements.

CURRENT TRANSFER RATIO						
PARAMETER	**TEST CONDITION**	**SYMBOL**	**MIN.**	**TYP.**	**MAX.**	**UNIT**
I_C/I_F	V_{CE} = 5 V, I_F = 10 mA	CTR	50	90		%

For technical questions, contact: optocoupleranswers@vishay.com
Document Number: 83533
Rev. 1.9, 13-Oct-09

chanhvinh.com

MAXIMUM SAFETY RATINGS						
PARAMETER	**TEST CONDITION**	**SYMBOL**	**MIN.**	**TYP.**	**MAX.**	**UNIT**
INPUT						
Forward current		I_F			130	mA
OUTPUT						
Power dissipation		P_{diss}			265	mW
COUPLER						
Rated impulse voltage		V_{IOTM}			6	kV
Safety temperature		T_{si}			150	°C

Note

According to DIN EN 60747-5-5 (see figure 2). This optocoupler is suitable for safe electrical isolation only within the safety ratings. Compliance with the safety ratings shall be ensured by means of suitable protective circuits.

INSULATION RATED PARAMETERS						
PARAMETER	**TEST CONDITION**	**SYMBOL**	**MIN.**	**TYP.**	**MAX.**	**UNIT**
Partial discharge test voltage - routine test	100 %, t_{test} = 1 s	V_{pd}	1.6			kV
Partial discharge test voltage - lot test (sample test)	t_{Tr} = 60 s, t_{test} = 10 s, (see figure 2)	V_{IOTM}	6			kV
		V_{pd}	1.3			kV
Insulation resistance	V_{IO} = 500 V	R_{IO}	10^{12}			Ω
	V_{IO} = 500 V, T_{amb} = 100 °C	R_{IO}	10^{11}			Ω
	V_{IO} = 500 V, T_{amb} = 150 °C (construction test only)	R_{IO}	10^{9}			Ω

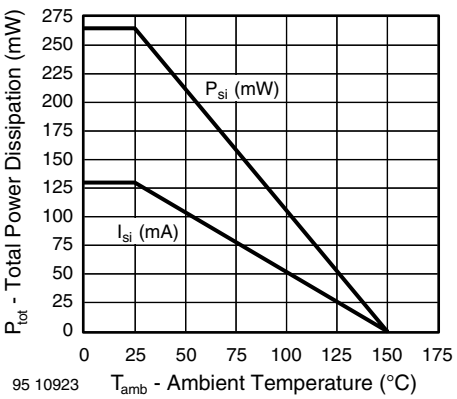

Fig. 1 - Derating Diagram

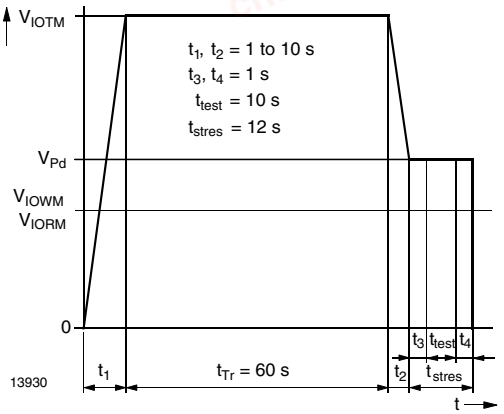

Fig. 2 - Test Pulse Diagram for Sample Test according to DIN EN 60747-5-5 (VDE 0884)/DIN EN 60747-; IEC 60747

chanhvinh.com

SWITCHING CHARACTERISTICS						
PARAMETER	**TEST CONDITION**	**SYMBOL**	**MIN.**	**TYP.**	**MAX.**	**UNIT**
Delay time	V_S = 5 V, I_C = 5 mA, R_L = 100 Ω, (see figure 3)	t_d		4		µs
Rise time	V_S = 5 V, I_C = 5 mA, R_L = 100 Ω, (see figure 3)	t_r		7		µs
Fall time	V_S = 5 V, I_C = 5 mA, R_L = 100 Ω, (see figure 3)	t_f		6.7		µs
Storage time	V_S = 5 V, I_C = 5 mA, R_L = 100 Ω, (see figure 3)	t_s		0.3		µs
Turn-on time	V_S = 5 V, I_C = 5 mA, R_L = 100 Ω, (see figure 3)	t_{on}		11		µs
Turn-off time	V_S = 5 V, I_C = 5 mA, R_L = 100 Ω, (see figure 3)	t_{off}		7		µs
Turn-on time	V_S = 5 V, I_F = 10 mA, R_L = 1 kΩ, (see figure 4)	t_{on}		25		µs
Turn-off time	V_S = 5 V, I_F = 10 mA, R_L = 1 kΩ, (see figure 4)	t_{off}		42.5		µs

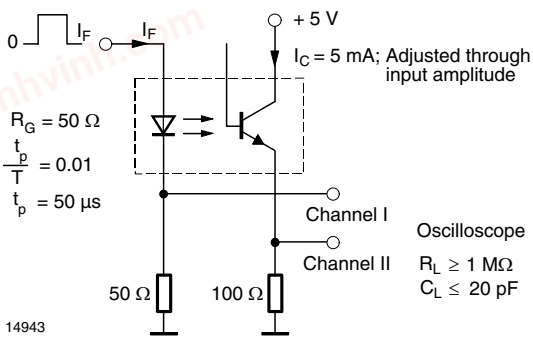

Fig. 3 - Test Circuit, Non-Saturated Operation

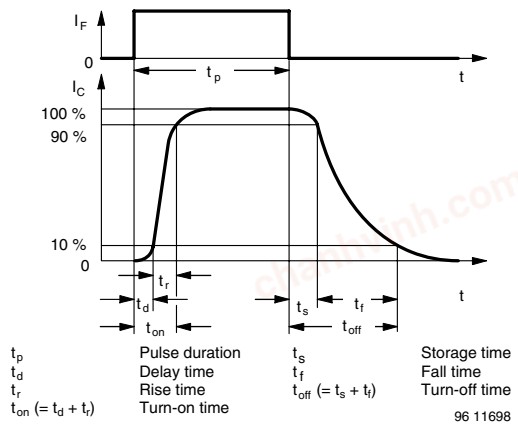

Fig. 5 - Switching Times

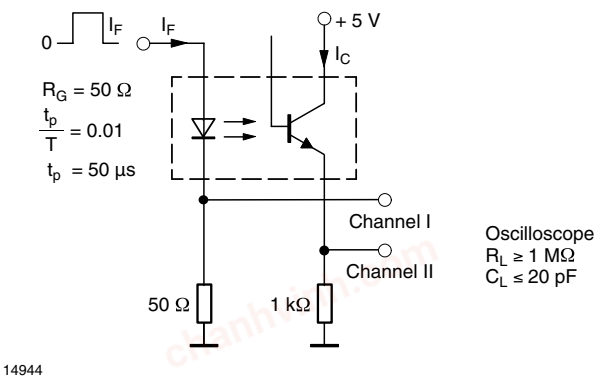

Fig. 4 - Test Circuit, Saturated Operation

chanhvinh.com

TYPICAL CHARACTERISTICS

T_{amb} = 25 °C, unless otherwise specified

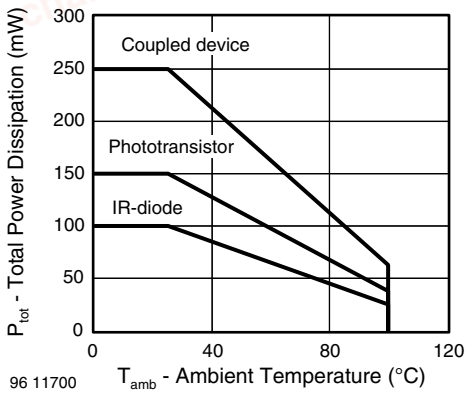

Fig. 6 - Total Power Dissipation vs. Ambient Temperature

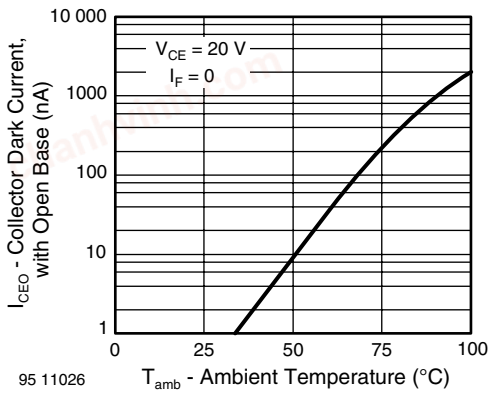

Fig. 9 - Collector Dark Current vs. Ambient Temperature

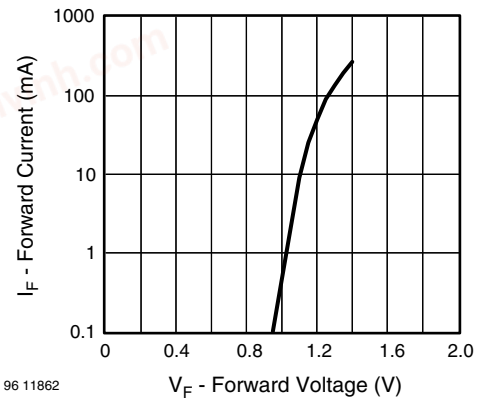

Fig. 7 - Forward Current vs. Forward Voltage

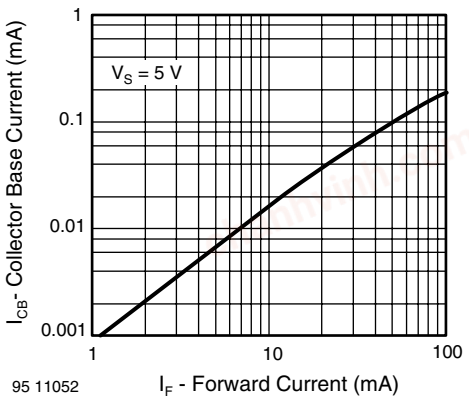

Fig. 10 - Collector Base Current vs. Forward Current

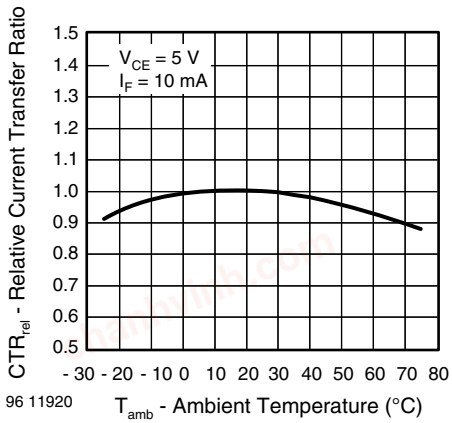

Fig. 8 - Relative Current Transfer Ratio vs. Ambient Temperature

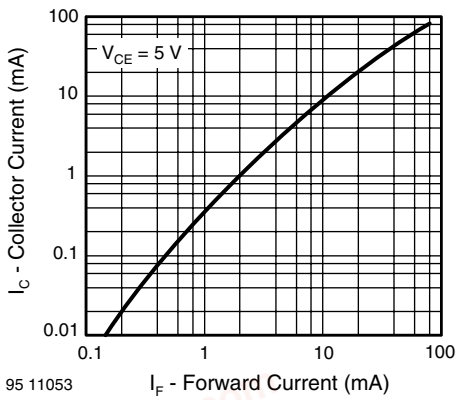

Fig. 11 - Collector Current vs. Forward Current

chanhvinh.com

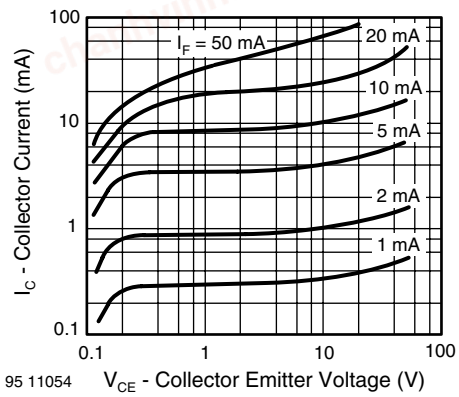

Fig. 12 - Collector Current vs. Collector Emitter Voltage

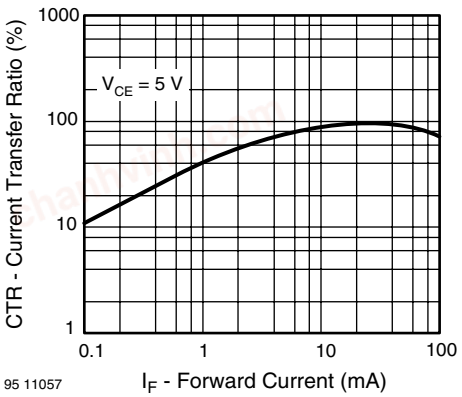

Fig. 15 - Current Transfer Ratio vs. Forward Current

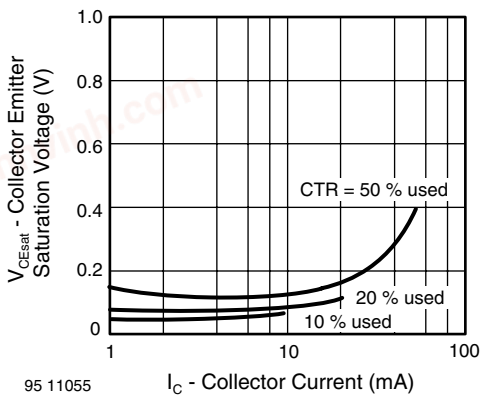

Fig. 13 - Collector Emitter Saturation Voltage vs. Collector Current

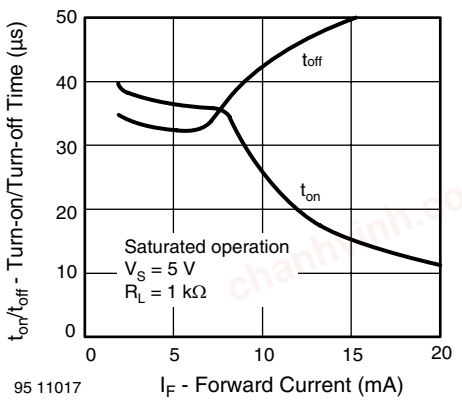

Fig. 16 - Turn-on/off Time vs. Forward Current

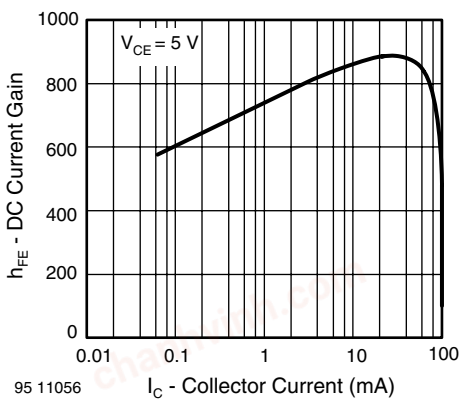

Fig. 14 - DC Current Gain vs. Collector Current

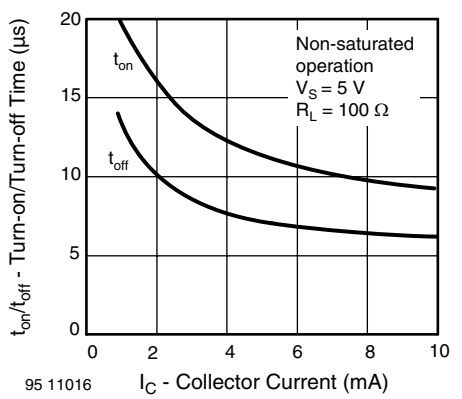

Fig. 17 - Turn-on/off Time vs. Collector Current

chanhvinh.com

PACKAGE DIMENSIONS in millimeters

DIP-6

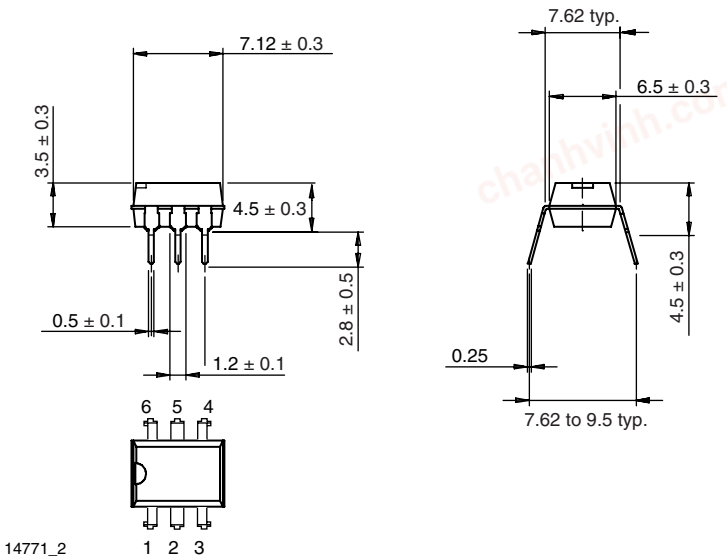

DIP-6, 400 mil

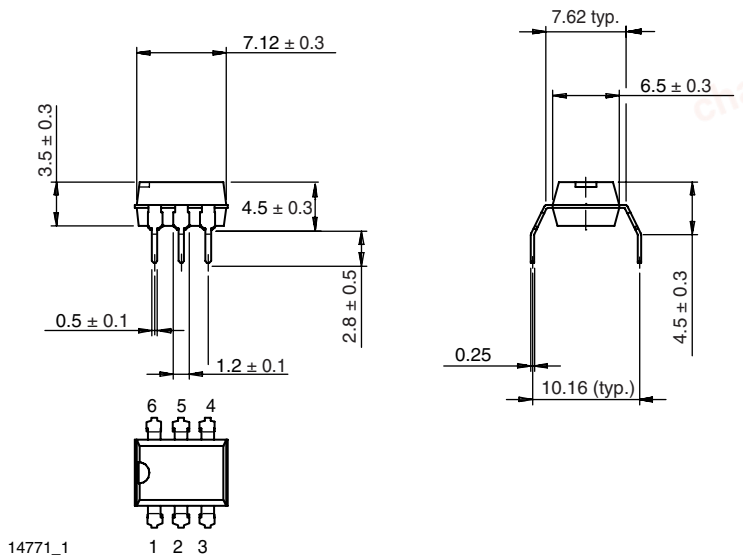

PACKAGE MARKING

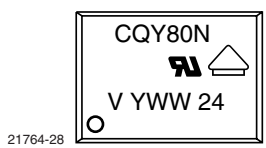

chanhvinh.com

Legal Disclaimer Notice

Vishay

Disclaimer

All product specifications and data are subject to change without notice.

Vishay Intertechnology, Inc., its affiliates, agents, and employees, and all persons acting on its or their behalf (collectively, “Vishay”), disclaim any and all liability for any errors, inaccuracies or incompleteness contained herein or in any other disclosure relating to any product.

Vishay disclaims any and all liability arising out of the use or application of any product described herein or of any information provided herein to the maximum extent permitted by law. The product specifications do not expand or otherwise modify Vishay’s terms and conditions of purchase, including but not limited to the warranty expressed therein, which apply to these products.

No license, express or implied, by estoppel or otherwise, to any intellectual property rights is granted by this document or by any conduct of Vishay.

The products shown herein are not designed for use in medical, life-saving, or life-sustaining applications unless otherwise expressly indicated. Customers using or selling Vishay products not expressly indicated for use in such applications do so entirely at their own risk and agree to fully indemnify Vishay for any damages arising or resulting from such use or sale. Please contact authorized Vishay personnel to obtain written terms and conditions regarding products designed for such applications.

Product names and markings noted herein may be trademarks of their respective owners.