chanhvinh.com

46.02 mm Diameter 15 Turn Dial



FEATURES

- Round vernier scale
- 1 $^{13}/_{16}$" dia.
- $^{1}/_{4}$" or $^{1}/_{8}$" or 6 mm metric bore shaft adapter
- Satin chrome finish with black markings
- Brushed chrome finish with black markings
- Material categorization: for definitions of compliance please see www.vishay.com/doc?99912

RoHS COMPLIANT

QUICK REFERENCE DATA

Sensor type	DIALS
Market appliance	Industrial
Dimensions	46 mm dia.

MECHANICAL SPECIFICATIONS

PARAMETER	
Mounting	Direct to shaft with # 4 to 40 hex socket set screw located adjacent to no. 75 on graduated dial
Numeral size: Counter wheel: Graduated dial:	0.90" H x 0.013" W (2.29 cm x 0.33 cm) 0.109" x 0.018" (2.77 cm x 0.46 cm)
Graduation size: Numeral and every Fifth Intermediate Width	0.55" L (1.40 cm) 0.035" L (0.89 cm) 0.012" (0.30 cm)
Weight	3.0 oz. max. (85.05 g)

OPERATIONAL SPECIFICATIONS

Readout and operation	1499 turns total The number in window (0 thru 14) indicates completed number of turns of the drive sleeve. Graduated circular dial indicates the percent of the partial turn of the drive sleeve
Transfer point	The number in center of window shall change as graduated dial rotates between 94 and 0
Rotation	Readout shall increase with clockwise and decrease with counterclockwise rotation
Accuracy	Zero blacklash between graduated dial and the drive sleeve

DIMENSIONS in inches (millimeters)

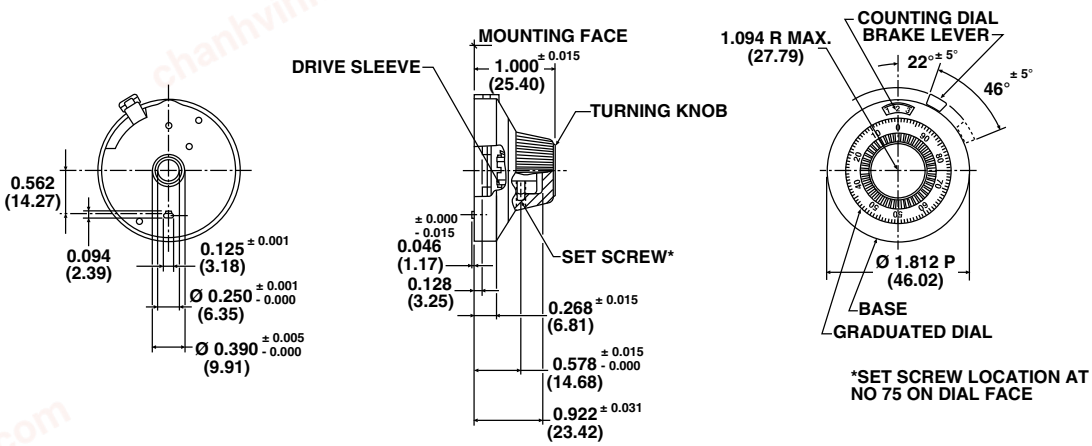

ORDERING INFORMATION / DESCRIPTION

21	A	11	B010	e
MODEL	SHAFT DIAMETER AND ACCOMMODATION	FINISH AND OTHER FEATURES	PACKAGING	LEAD FINISH
	A $^{1}/_{4}$" shaft (standard) **B** 6 mm metric bore shaft adapter **C** $^{1}/_{8}$" shaft adapter	**11.** Satin chrome, black markings **31.** Brushed chrome, black markings		

Example: **21 - A - 11**

SAP PART NUMBERING GUIDELINES

21	A	11	B10
MODEL	SHAFT DIAMETER	FINISH	PACKAGING

For technical questions, contact: sferprecisionpot@vishay.com
THIS DOCUMENT IS SUBJECT TO CHANGE WITHOUT NOTICE. THE PRODUCTS DESCRIBED HEREIN AND THIS DOCUMENT ARE SUBJECT TO SPECIFIC DISCLAIMERS, SET FORTH AT www.vishay.com/doc?91000

chanhvinh.com

Disclaimer

ALL PRODUCT, PRODUCT SPECIFICATIONS AND DATA ARE SUBJECT TO CHANGE WITHOUT NOTICE TO IMPROVE RELIABILITY, FUNCTION OR DESIGN OR OTHERWISE.

Vishay Intertechnology, Inc., its affiliates, agents, and employees, and all persons acting on its or their behalf (collectively, “Vishay”), disclaim any and all liability for any errors, inaccuracies or incompleteness contained in any datasheet or in any other disclosure relating to any product.

Vishay makes no warranty, representation or guarantee regarding the suitability of the products for any particular purpose or the continuing production of any product. To the maximum extent permitted by applicable law, Vishay disclaims (i) any and all liability arising out of the application or use of any product, (ii) any and all liability, including without limitation special, consequential or incidental damages, and (iii) any and all implied warranties, including warranties of fitness for particular purpose, non-infringement and merchantability.

Statements regarding the suitability of products for certain types of applications are based on Vishay's knowledge of typical requirements that are often placed on Vishay products in generic applications. Such statements are not binding statements about the suitability of products for a particular application. It is the customer's responsibility to validate that a particular product with the properties described in the product specification is suitable for use in a particular application. Parameters provided in datasheets and / or specifications may vary in different applications and performance may vary over time. All operating parameters, including typical parameters, must be validated for each customer application by the customer's technical experts. Product specifications do not expand or otherwise modify Vishay's terms and conditions of purchase, including but not limited to the warranty expressed therein.

Hyperlinks included in this datasheet may direct users to third-party websites. These links are provided as a convenience and for informational purposes only. Inclusion of these hyperlinks does not constitute an endorsement or an approval by Vishay of any of the products, services or opinions of the corporation, organization or individual associated with the third-party website. Vishay disclaims any and all liability and bears no responsibility for the accuracy, legality or content of the third-party website or for that of subsequent links.

Except as expressly indicated in writing, Vishay products are not designed for use in medical, life-saving, or life-sustaining applications or for any other application in which the failure of the Vishay product could result in personal injury or death. Customers using or selling Vishay products not expressly indicated for use in such applications do so at their own risk. Please contact authorized Vishay personnel to obtain written terms and conditions regarding products designed for such applications.

No license, express or implied, by estoppel or otherwise, to any intellectual property rights is granted by this document or by any conduct of Vishay. Product names and markings noted herein may be trademarks of their respective owners.

© 2021 VISHAY INTERTECHNOLOGY, INC. ALL RIGHTS RESERVED