chanhvinh.com

Indication and Adjustment

Product Information
VEGADIS 61

Level

Switching

Pressure



chanhvinh.com

VEGA

chanhvinh.com
chanhvinh.com
chanhvinh.com
chanhvinh.com
chanhvinh.com
chanhvinh.com

27870-EN-021202

chanhvinh.com

Contents

1 Product description 4
1.1 Configuration 4
1.2 Principle of operation 4
1.3 Adjustment 4
2 Mounting 5
3 Connecting to the sensor 6
3.1 Prepare connection 6
5.3 Wiring plans 6
4 Set-up with the indicating and adjustment module PLICSCOM 7
4.1 Adjustment system 7
4.2 Set-up procedure 7
Supplement 8
Technical data 8
Dimensions 9

chanhvinh.com

27870-EN-021202

chanhvinh.com

1 Product description

1.1 Configuration

Scope of delivery
The scope of delivery includes:
- VEGADIS 61 indication and adjustment unit
- Documentation
  - operating instructions manual
  - Ex specific safety instructions (for Ex versions) and other certificates, if required

Components
VEGADIS 61 consists of the following components:
- mounting plate
- housing with electronics
- housing cover with indicating and adjustment module PLICSCOM

The components are available in different versions.

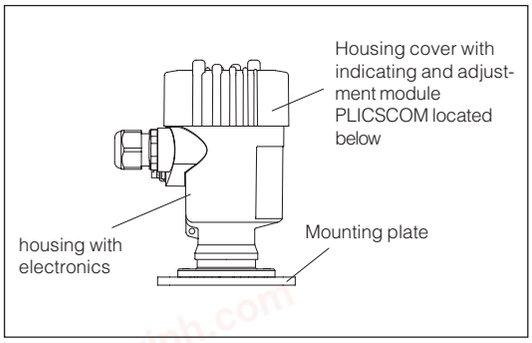

Fig. 1:
Example of VEGADIS 61 with plastic housing and mounting plate for wall mounting

1.2 Principle of operation

Area of application
VEGADIS 61 is an external indication and adjustment unit for the following VEGA sensors:
– Pressure transmitters VEGABAR 52, 53, 61, 64 and 65
- Level sensors VEGAFLEX 61, 62 and 65.



Fig. 2:
Connection of VEGADIS 61 to the sensor

Power supply
VEGADIS 61 is connected to the sensor via a four-wire, screened standard cable with a length of max. 25 m. An extra power supply is not required.

1.3 Adjustment

VEGADIS 61 can be adjusted via two different media:
- indicating and adjustment module PLICSCOM
- adjustment software PACT*ware*™ and PC.

The parameter adjustment is generally saved in the sensor, or optionally in the PC when adjusting with PACT*ware*™ and PC.

27870-EN-021202

chanhvinh.com

2 Mounting

Select installation position

VEGADIS 61 functions in any installation position. It is mounted either on a mounting plate or rail 35 x 7.5 acc. to DIN EN 50 022. The housing can be rotated 330° without using any tools.

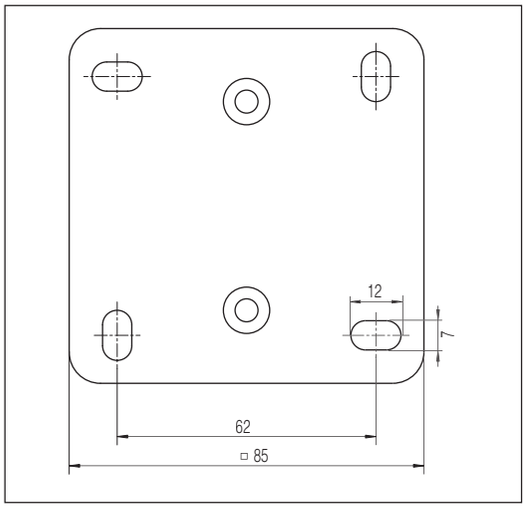

Fig. 3:
Bore pattern for mounting on the mounting plate

Protection against moisture

Protect VEGADIS against moisture.

–> lead the connection cable located in front of the cable entry downwards.

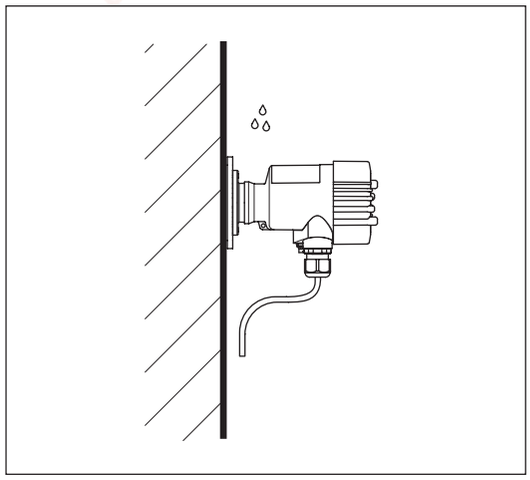

Fig. 4:
Measures against moisture ingress

Rain and condensed water can thus drain off, especially in outdoor installations, in rooms where humidity is expected (e.g. caused by cleaning processes) or on cooled or heated vessels.

27870-EN-021202

chanhvinh.com

3 Connecting to the sensor

3.1 Prepare connection

Note safety instructions
Always observe the following safety instructions:

- Connect only in the complete absence of line voltage

Note safety instructions of Ex applications
In hazardous areas, always observe the appropriate guidelines and type approval certificates of the sensors and VEGADIS 61.

Select connection cable
VEGADIS 61 is connected with standard four-wire cable to the sensor. An outer diameter of 5 … 9 mm ensures the seal effect of the cable entry.

We recommend screened cable.

Select connection cable for Ex applications
In Ex applications, please observe the appropriate installation guidelines.

5.3 Wiring plans

Top view of the electronics and connection compartment

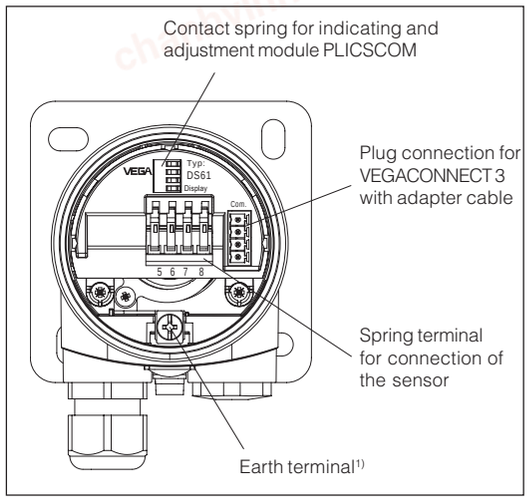

Fig. 7:
Top view of the combined electronics and connection compartment

Wiring plan

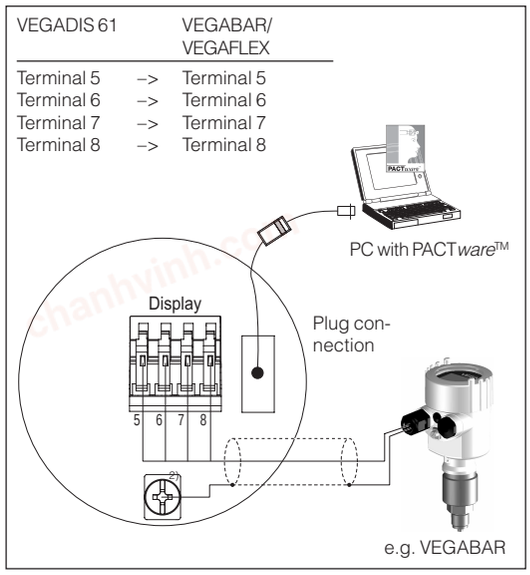

Fig. 8:
Wiring plan

1) Connect cable screen here, connect ground terminal on the housing exterior to ground as prescribed. The two terminals are galvanically connected.
2) Earthing at both ends in case of non-Ex. For Ex we recommend earthing at one side acc. to EN 60079-14.

27870-EN-021202

chanhvinh.com

4 Set-up with the indicating and adjustment module PLICSCOM

4.1 Adjustment system

Indicating and adjustment elements

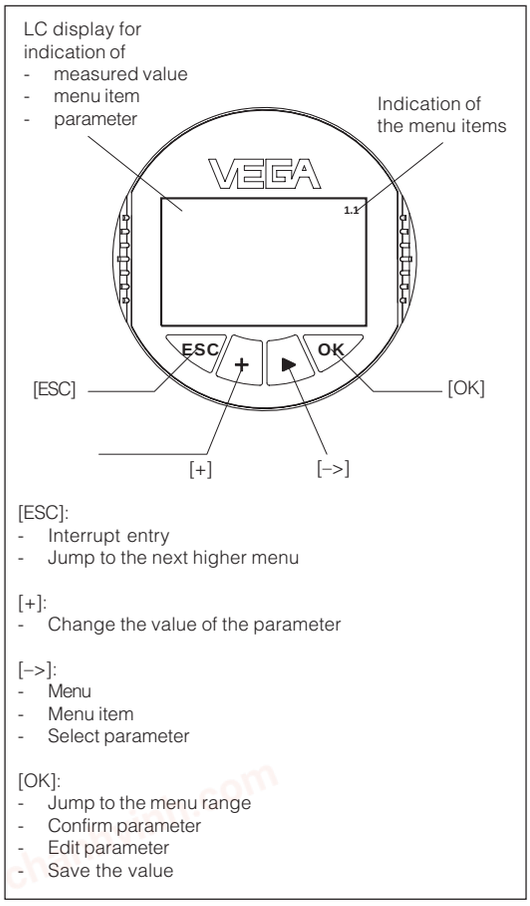

[ESC]:
- Interrupt entry
- Jump to the next higher menu

[+]:
- Change the value of the parameter

[–>]:
- Menu
- Menu item
- Select parameter

[OK]:
- Jump to the menu range
- Confirm parameter
- Edit parameter
- Save the value

Adjustment system
You adjust the sensor via the four keys and the display of the A/B module. The functions are shown in the above illustration. 15. minutes after you have pushed a key for the last time, an automatic reset to the measured value will be triggered.

4.2 Set-up procedure

The set-up and adjustment of the sensors must be carried out according to the operating instructions of the sensor and the indicating and adjustment module PLICSCOM.

chanhvinh.com

Supplement

Technical data

General data

Instrument name	VEGADIS 61
Materials	
– housing	plastic PBT (polybutylenterephtalat), stainless steel 1.4435 (316L)
– inspection window in the housing cover	plastic PC (polycarbonat)
– earth terminal	stainless steel 1.4305
Weight	0.35 kg

Ambient conditions

Ambient temperature	-20 … +70°C
Storage and transport temperature	-40 … +85°C

Adjustment module PLICSCOM

Supply and data transfer	with VEGADIS 61 via sliding contacts (I^2C-Bus)
Display	LC-Display in Full-Dot-Matrix
Adjustment elements	IP 20
Materials	
– housing	ABS
– inspection window	Polyester foil

Electromechanical data

Cable entry	1 x M20 x 1.5 (cable-ø 5 … 9 mm)
spring-loaded terminal	for conductor cross-section up to 2.5 mm^2

Adjustment circuit

Connection to	VEGABAR 52, 53, 61, 64, 65 VEGAFLEX 61, 62, 65
Data transmission	digital (I^2C-Bus)
Connection line	4-wire, screened
Cable length	max. 25 m

Electrical protective measures

Protection	IP 66/IP 67
Protection class	II
Overvoltage category	III

Approvals

ATEX II 1G, 2G EEx ia IIC T6

27870-EN-021202

chanhvinh.com

Dimensions

VEGADIS 61

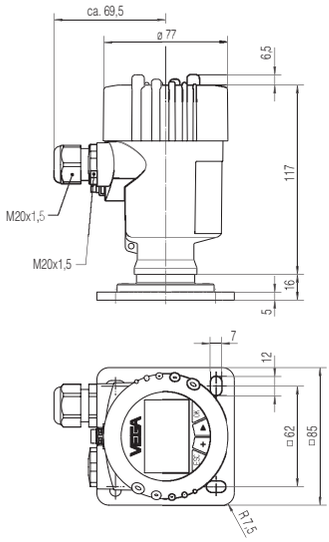

chanhvinh.com

chanhvinh.com

chanhvinh.com

27870-EN-021202

chanhvinh.com

chanhvinh.com

chanhvinh.com

VEGA Grieshaber KG
Am Hohenstein 113
77761 Schiltach
Germany
Phone +49 7836 50-0
Fax +49 7836 50-201
E-mail info@de.vega.com
www.vega.com

You will have on our homepage
www.vega.com
under VEGA online
Downloads
of the following

- operating instructions manuals
- menu schematics
- software
- certificates
- approvals

and many of other things.

UMWELT-MANAGEMENT
Wir sind zertifiziert
Regelmäßige freiwillige Überwachung nach ISO 14001

27870-EN-021202