chanhvinh.com

VCC | OPTOELECTRONICS
lighting:theway

0603 SMD TYPE LED

VAOL-S6SB4

Features

- Fit automatic placement equipment.
- Fit Compatible with infrared and vapor phase reflow solder process.
- Pb-free.
- RoHS compliant.

Descriptions

- For higher packing density .
- For minature applications .
- Water clear lens .
- Chip material : InGaN .
- Emitting color : Blue.

Package Outline Dimensions

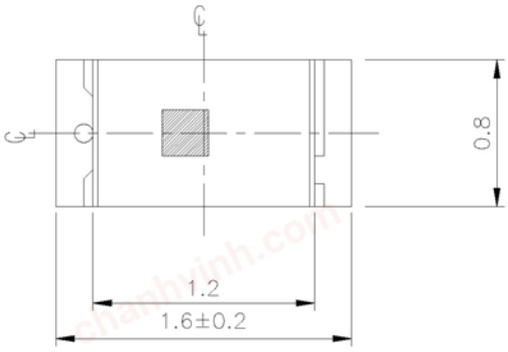

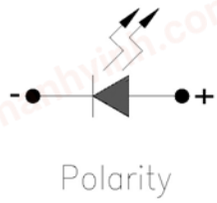

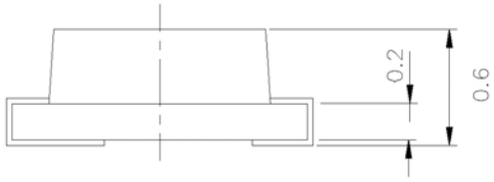

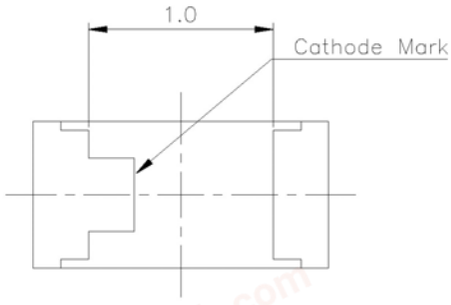

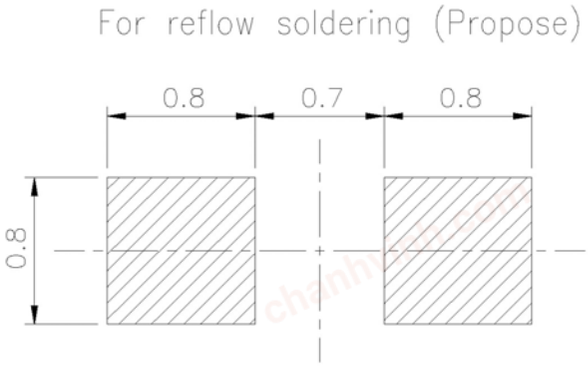

Note: The tolerances unless mentioned is ±0.1mm ,Unit = mm

www.vcclite.com
190 bosstick blvd, ste 101
san marcos, ca 92069
phone 760.560.1300
fax 760.560.1301
RoHS
ISO 9001 Registered

chanhvinh.com

VCC | OPTOELECTRONICS
lighting:theway

Absolute Maximum Ratings (Ta=25℃)

Parameter	Symbol	Rating	Unit
Reverse Voltage	V_R	5	V
Forward Current	I_F	25	mA
Operating Temperature	Topr	-40 ~ +85	℃
Storage Temperature	Tstg	-40 ~ +90	℃
Soldering Temperature	Tsol	260 (for 5 second)	℃
Electrostatic Discharge (HBM)	ESD	150	V
Power Dissipation	Pd	110	mW
Peak Forward Current (Duty 1/10 @1KHz)	I_{FP}	100	mA
Soldering Temperature	Tsol	Reflow Soldering : 260 ℃ for 5 sec. Hand Soldering : 350 ℃ for 3 sec.	

Electro-Optical Characteristics (Ta=25℃)

Parameter	Symbol	Min.	Typ.	Max.	Unit	Condition
Luminous Intensity	Iv	11.5	---	28.5	mcd	I_F=5mA
Viewing Angle	2θ 1/2	---	120	---	deg	I_F=20mA
Peak Wavelength	λ p	---	468	---	nm	I_F=20mA
Dominant Wavelength	λ d	470	---	475	nm	I_F=5mA
Spectrum Radiation Bandwidth	△ λ	---	35	---	nm	I_F=20mA
Forward Voltage	V_F	2.5	---	3.0	V	I_F=2mA
Reverse Current	I_R	---	---	50	μA	V_R=5V

Notes:

1.Tolerance of Luminous Intensity ±10%

2.Tolerance of Dominant Wavelength ± 1nm

3.Tolerance of Forward Voltage ±0.05V

www.vcclite.com
190 bosstick blvd, ste 101
san marcos, ca 92069
phone 760.560.1300
fax 760.560.1301

RoHS
ISO 9001 Registered

chanhvinh.com

VCC | OPTOELECTRONICS
lighting:theway

Bin Range Of Luminous Intensity

Bin code	Min	Max	Unit	Condition
1-1	11.50	14.50	mcd	IF=5mA
1-2	14.50	18.00		
2-1	18.00	22.50		
2-2	22.50	28.50		

Bin Range Of Dom. Wavelength

Bin code	Min	Max	Unit	Condition
1	470	475	nm	IF=5mA

Bin Range Of Forward Voltage

Bin code	Min	Max	Unit	Condition
1-1	2.50	2.55	V	IF=2mA
1-2	2.55	2.60		
2-1	2.60	2.65		
2-2	2.65	2.70		
3-1	2.70	2.75		
3-2	2.75	2.80		
4-1	2.80	2.85		
4-2	2.85	2.90		
5-1	2.90	2.95		
5-2	2.95	3.00		

Specific binning requirements- please contact our home office

Notes:

1.Tolerance of Luminous Intensity ±10%
2.Tolerance of Dominant Wavelength ± 1nm
3.Tolerance of Forward Voltage ±0.05V

www.vcclite.com
190 bosstick blvd, ste 101
san marcos, ca 92069
phone 760.560.1300
fax 760.560.1301

RoHS
ISO 9001 Registered

chanhvinh.com

VCC | OPTOELECTRONICS
lighting:theway

Typical Electro-Optical Characteristics Curves

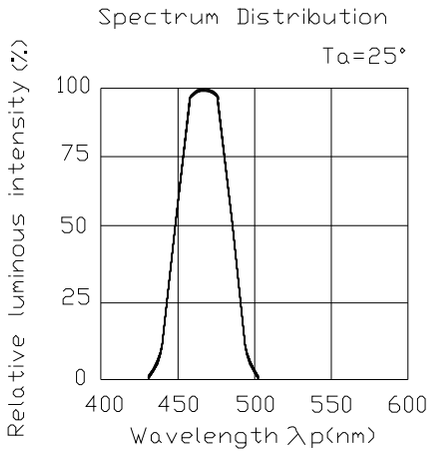

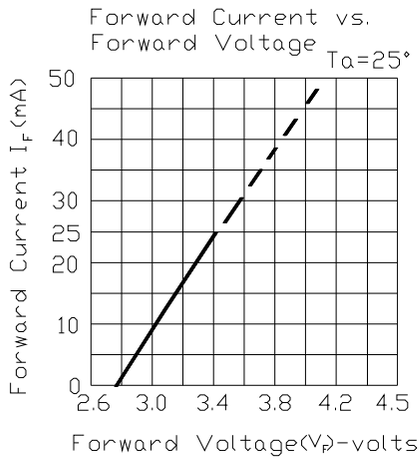

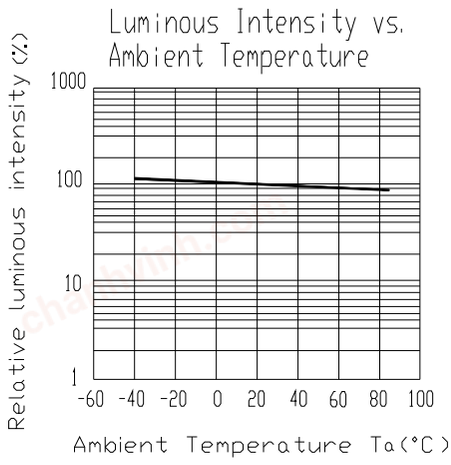

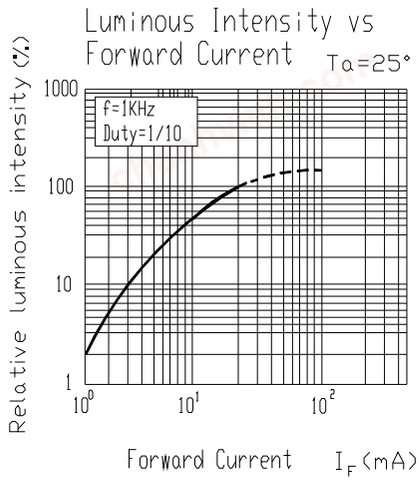

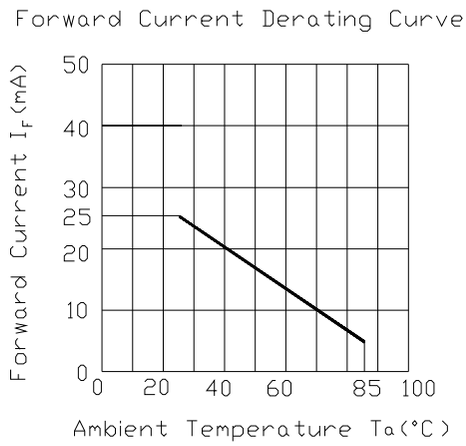

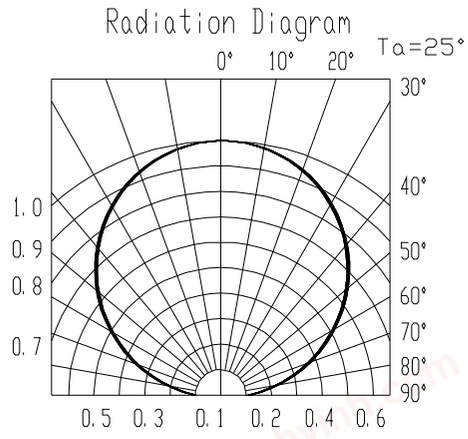

www.vcclite.com
190 bosstick blvd, ste 101
san marcos, ca 92069
phone 760.560.1300
fax 760.560.1301
RoHS
ISO 9001
Registered

chanhvinh.com

VCC | OPTOELECTRONICS
lighting:theway

Reel Dimensions

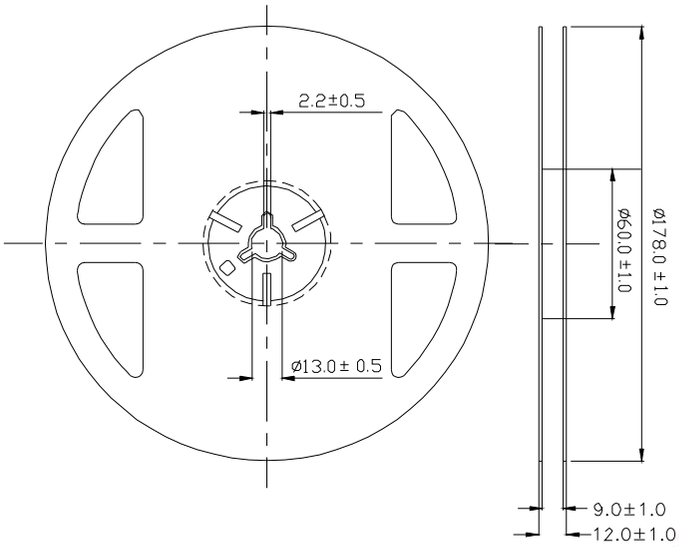

Note: The tolerances unless mentioned is ±0.1mm ,Unit = mm

chanhvinh.com

www.vcclite.com
190 bosstick blvd, ste 101
san marcos, ca 92069
phone 760.560.1300
fax 760.560.1301

RoHS
ISO 9001 Registered

chanhvinh.com

VCC | OPTOELECTRONICS
lighting:theway

Carrier Tape Dimensions: Loaded quantity 3000 PCS per reel

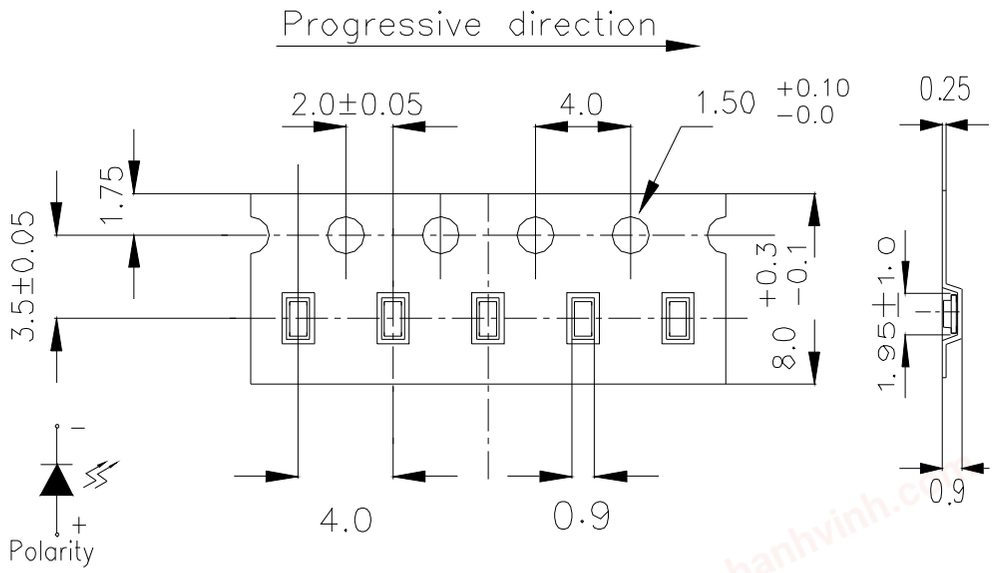

Note: The tolerances unless mentioned is ±0.1mm ,Unit = mm

Moisture Resistant Packaging

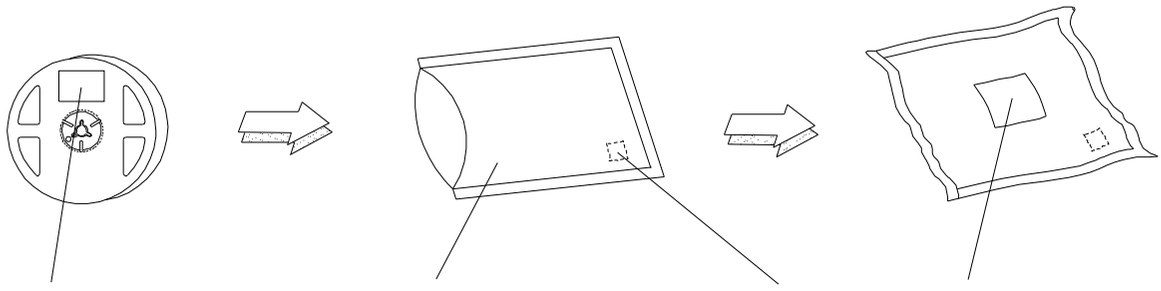

Label Aluminum moisture-proof bag Desiccant Label

www.vcclite.com
190 bosstick blvd, ste 101
san marcos, ca 92069
phone 760.560.1300
fax 760.560.1301
RoHS
ISO 9001 Registered

chanhvinh.com

VCC | OPTOELECTRONICS
lighting:theway

Soldering Condition

1.Pb-free solder temperature profile

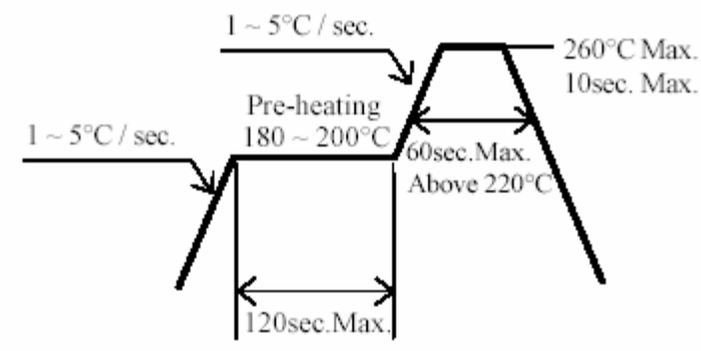

2.Reflow soldering should not be done more than two times.

3 When soldering, do not put stress on the LEDs during heating.

4 After soldering, do not warp the circuit board.

Soldering Iron

Each terminal is to go to the tip of soldering iron temperature less than 350℃ for 3 seconds within once in less than the soldering iron capacity 25W. Leave two seconds and more intervals, and do soldering of each terminal. Be careful because the damage of the product is often started at the time of the hand solder.

www.vcclite.com
190 bosstick blvd, ste 101
san marcos, ca 92069
phone 760.560.1300
fax 760.560.1301
RoHS
ISO 9001 Registered