chanhvinh.com

RTN125 Retainer for LFC Series 5mm Light Pipe



Retainer for LFC Series litepipe™
for use in high vibration environments

Key features

- fits the LFC 5mm Light Pipe
- secure and uniform placement of the light pipe to the panel
- provides a reliable solution for high-vibration environments
- field-proven design

Product Specifications

Material	
RTN125	Black Elastocon 8068

Installation Specifications	
outer dimension	Ø 0.240" ± 0.010 (6.10mm ± 0.25)
length	0.150" (3.81mm)

Dimensions

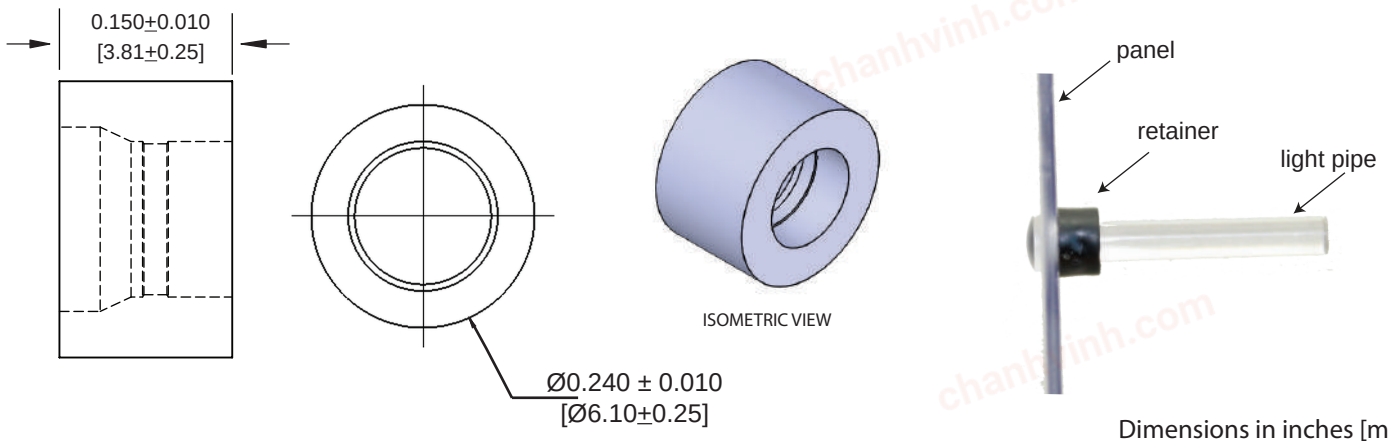

Dimensions in inches [mm]

Ordering data

RTN125

Compliance & approvals

REACH COMPLIANCE

RoHS COMPLIANT