chanhvinh.com

NOTES:

1. FINISH: Parts should have a smooth appearance, min.600 surface finish, with no gates and all flash removed.
2. Draft 1˚ on .095 dimension.
3. U.S. & Foreign Pat. Issued & Pend.

REVISIONS				
ECN #	REV	DESCRIPTION	DATE	INITIALS
	N/A	INITIAL RELEASE	3/21/07	SK
	001	REVISED PER ECR1110AZ01	1/29/10	KH
145	002	CHANGE IN MATERIAL	7/12/10	KH

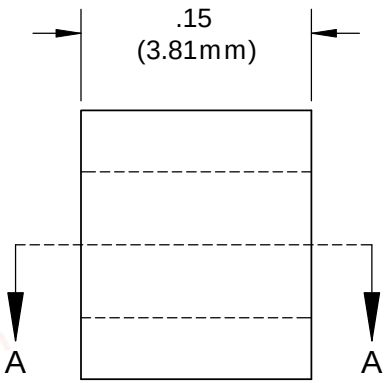

SECTION A-A

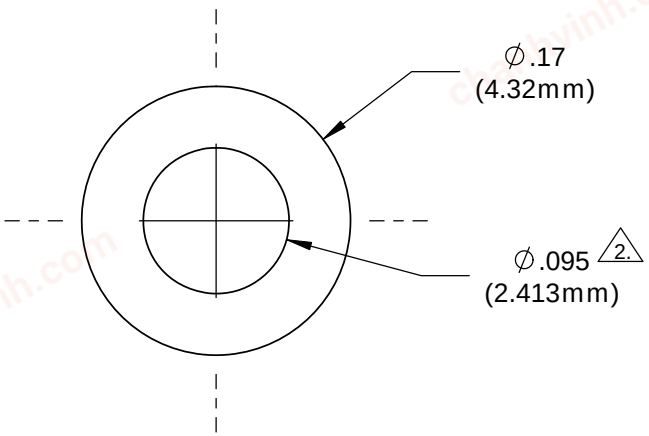

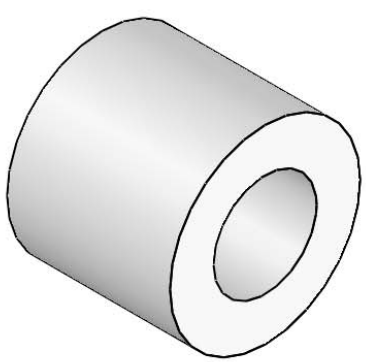

ISOMETRIC VIEW

UNLESS OTHERWISE SPECIFIED DIMENSIONS ARE IN INCHES:
ANGLES ± 1' DECIMALS .X ±.020 .XX ±.010 .XXX ±.005
FINISH
BREAK ALL CORNERS AND SHARP EDGES .030 MAX

THIRD ANGLE PROJECTION

PROPRIETARY AND CONFIDENTIAL
THE INFORMATION CONTAINED IN THIS DRAWING IS THE SOLE PROPERTY OF VISUAL COMMUNICATIONS COMPANY, INC. ANY REPRODUCTION IN PART OR AS A WHOLE WITHOUT THE WRITTEN PERMISSION OF VISUAL COMMUNICATIONS COMPANY, INC IS PROHIBITED.

MATERIAL: TPE, BLACK

FINISH: SEE NOTES

APPROVALS		DATE
DRAWN	K.HOWARD	1/29/10
CHECKED	DPZ	2/22/10

DO NOT SCALE DRAWING

VISUAL COMMUNICATIONS COMPANY
190 Bosstick Boulevard, Suite 101 San Marcos, CA 92069 USA
Phone (760) 560-1300 Fax (760) 560-1301 email vccsales@vcclite.com

TITLE: CLIPLITE RTN 100

SIZE	DWG. NO.	REV
A	RTN 100	002

SCALE: 8:1 SHEET 1 OF 1

5 4 3 2 1