chanhvinh.com

PML50 Series
0.688" (17.5mm) Harsh Environment LED FlexVolt™ Panel Mount Indicator



PML50 Series with built-in LED FlexVolt™ technology

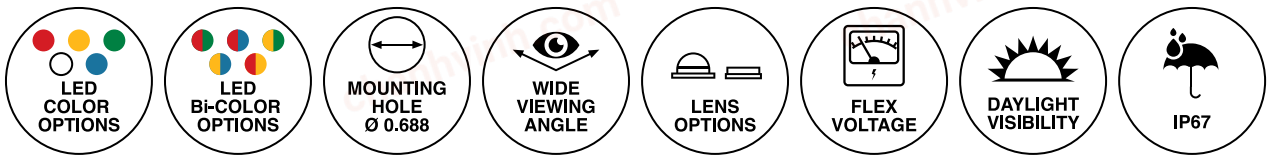

Application

- Industrial
- Transportation
- High Humidity, Sunlight and/or rain-expose conditions
- Maritime, Oil and Gas Industry
- Automation and Control
- High Vibration
- Safety and Emergency
- Pilot Instrumentation
- Outdoor Applications

Key Features

- For panel hole diameter: 0.688" (17.5mm)
- Low profile flat and semi dome lens options for uniform illumination
- Flat lens with a clear diffused lens for increased contrast visibility between on and off
- Semi dome lens with a white diffused lens for optimal side distance viewing
- Increase productivity w/color coded wiring
- Single colors options: Red, Green, White, Blue and Yellow
- Bi-color options: Red/Green, Red/Blue, Yellow/Green, Yellow/Blue and Red//Yellow
- Offered with two lens options: Low Profile Flat and Semi Dome
- Resistant to shock and vibration
- Flex voltage (5 VDC to 28 VDC) designed for application flexibility: one solution for several required input voltages
- Wide viewing angle
- Mounting hardware provided: lock washer and hex nut
- "Double D" mounting hole prevents any rotation of the indicator while the nut is being installed
- IP67 specification rating protects front panels against entry of dust, rain and moisture
- InGaN and AlInGaP Technology
- Visible LED in direct sunlight with UV resistance lens
- Long lifetime, up to 100k hours
- Does not require an external resistor to work
- For custom cable length, connectors or colors contact VCC
- RoHS and REACH Compliant

Ordering Data

PML50



Example:

PML50RFVW

PML50 Series, Red Color,
5 VDC to 28 VDC

PML50 - Semi Dome



Example:

PML50SWFVW

PML50 Series, White Color, 5 VDC to
28 VDC, Semi Dome Lens

Part Number	Color	Lens	Terminal	Voltage	Luminance (mcd)
PML50RFVW	Red	Flat	24 AWG 5.5" color-coded wire leads	5 VDC to 28 VDC	950
PML50WFVW	White	Flat	24 AWG 5.5" color-coded wire leads	5 VDC to 28 VDC	2980
PML50GFVW	Green	Flat	24 AWG 5.5" color-coded wire leads	5 VDC to 28 VDC	3640
PML50BFVW	Blue	Flat	24 AWG 5.5" color-coded wire leads	5 VDC to 28 VDC	270
PML50YFVW	Yellow	Flat	24 AWG 5.5" color-coded wire leads	5 VDC to 28 VDC	2020
PML50SRFVW	Red	Semi Dome	24 AWG 5.5" color-coded wire leads	5 VDC to 28 VDC	780
PML50SWFVW	White	Semi Dome	24 AWG 5.5" color-coded wire leads	5 VDC to 28 VDC	1090
PML50SGFVW	Green	Semi Dome	24 AWG 5.5" color-coded wire leads	5 VDC to 28 VDC	1770
PML50SBFVW	Blue	Semi Dome	24 AWG 5.5" color-coded wire leads	5 VDC to 28 VDC	200
PML50SYFVW	Yellow	Semi Dome	24 AWG 5.5" color-coded wire leads	5 VDC to 28 VDC	970

PML50 - Bi-Color



Example:

PML50YGFVW

PML50 Series, Yellow/Green Bi-Color,
5 VDC to 28 VDC

Part Number	Color	Lens	Terminal	Voltage	Luminance (mcd)
PML50RGFVW	Red/Green	Flat	24 AWG 5.5" color-coded wire leads	5 VDC to 28 VDC	1130/2380
PML50RBFVW	Red/Blue	Flat	24 AWG 5.5" color-coded wire leads	5 VDC to 28 VDC	870/2373
PML50YGFVW	Yellow/Green	Flat	24 AWG 5.5" color-coded wire leads	5 VDC to 28 VDC	1087/762
PML50YBFVW	Yellow/Blue	Flat	24 AWG 5.5" color-coded wire leads	5 VDC to 28 VDC	762/2373
PML50RYFVW	Red/Yellow	Flat	24 AWG 5.5" color-coded wire leads	5 VDC to 28 VDC	870/394
PML50SRGFVW	Red/Green	Semi Dome	24 AWG 5.5" color-coded wire leads	5 VDC to 28 VDC	520/1370

Notes: Test Parameters: Voltage at 24VDC and Temperature at 25 or 77

chanhvinh.com

Product Dimensions

Semi Dome Lens

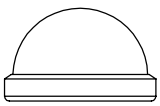

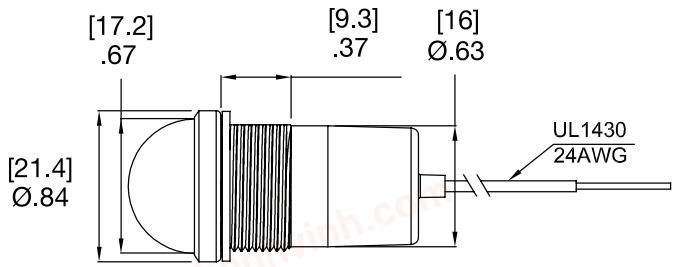

Flat Lens

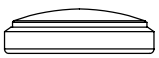

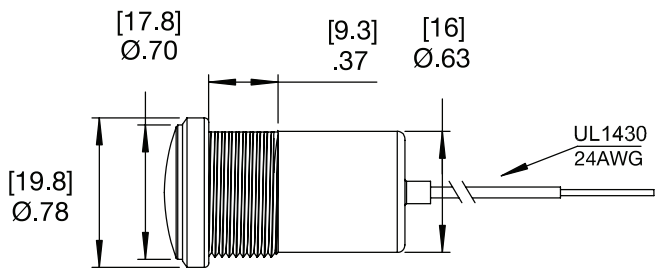

Recommended Mounting Hole

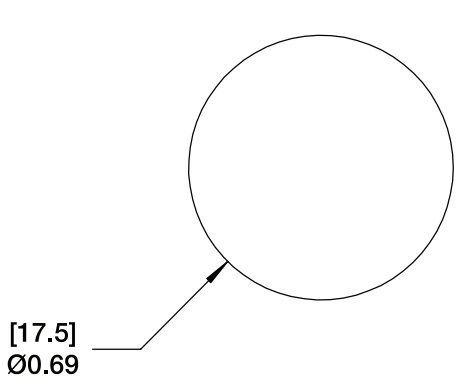

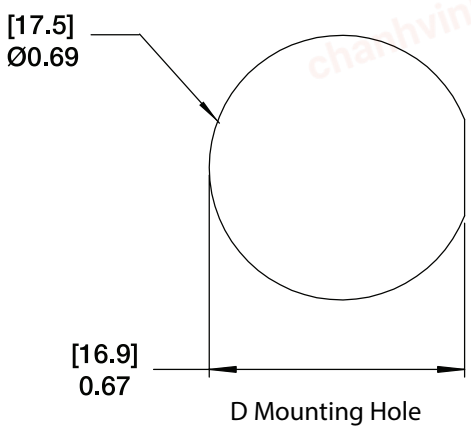

D Mounting Hole

Notes:
1. All dimensions are in inches [millimeters]
2. Tolerance is ±[0.25] 0.01 unless otherwise noted.
3. The specifications, characteristics and technical data described in the datasheet are subject to change without prior notice.

chanhvinh.com

Product Dimensions

Semi Dome Lens

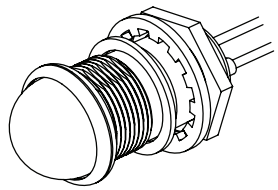

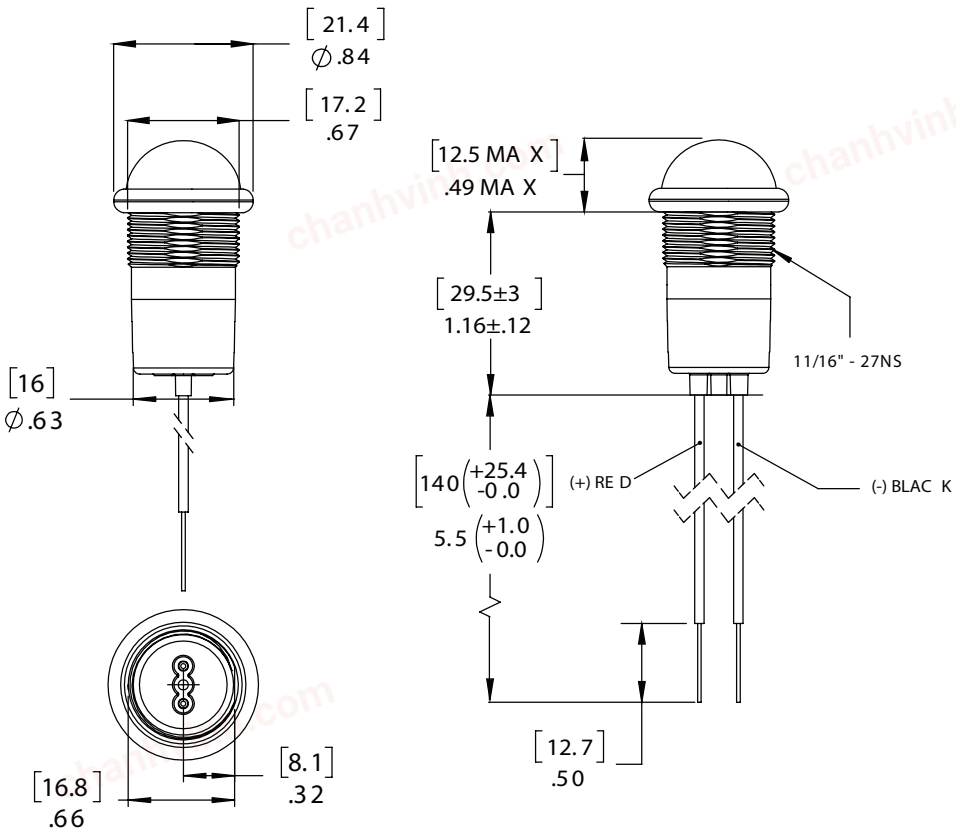

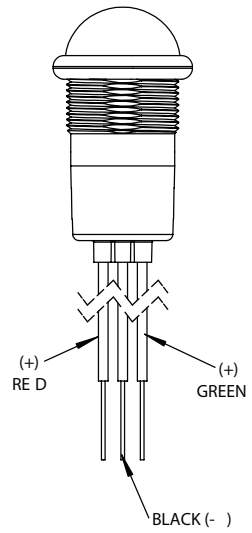

BI-COLOR
(3-LEAD WIRE)

Notes:
1. All dimensions are in inches [millimeters]
2. Tolerance is ±[0.25] 0.01 unless otherwise noted.
3. The specifications, characteristics and technical data described in the datasheet are subject to change without prior notice.

chanhvinh.com

Product Dimensions

Flat Lens

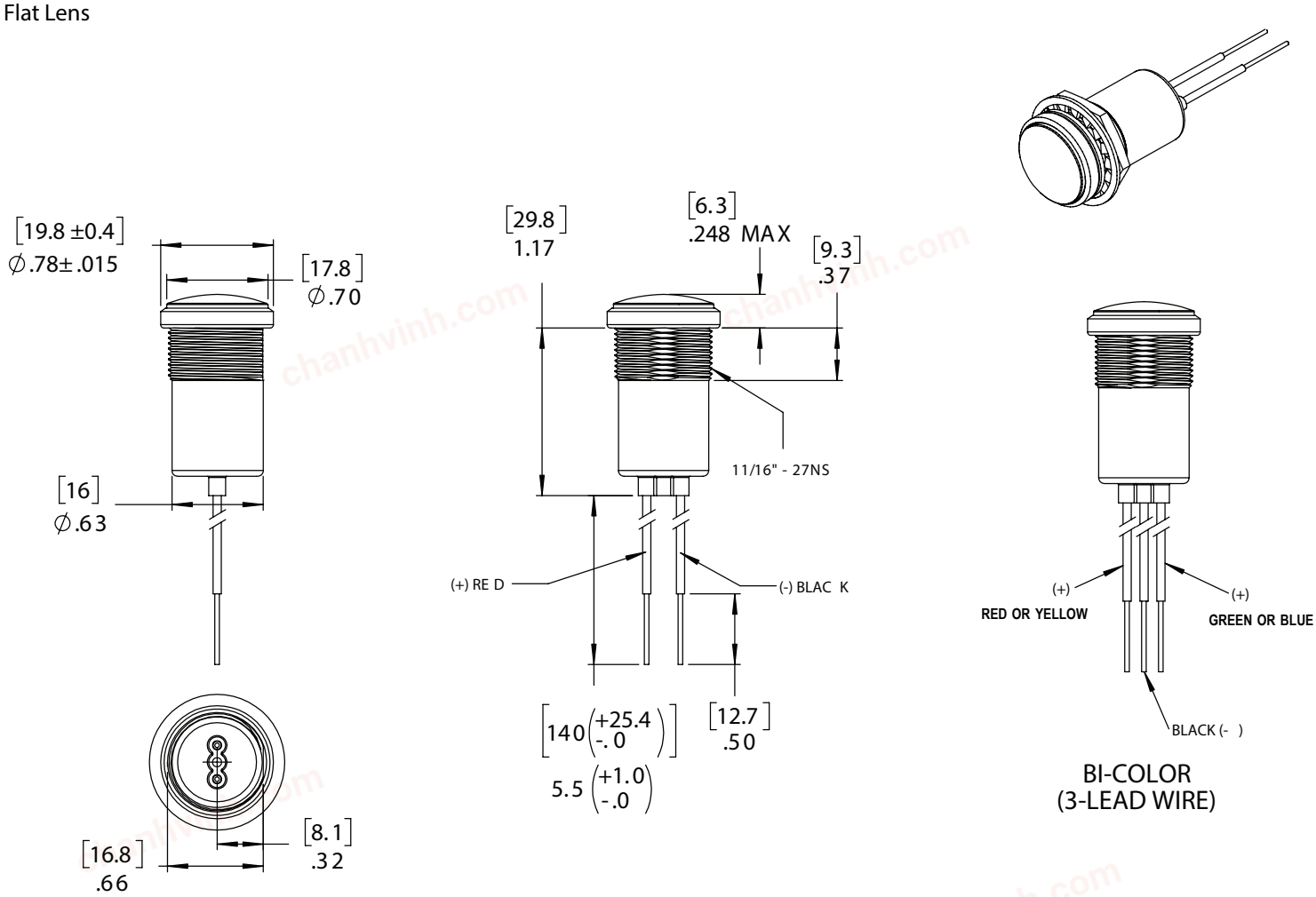

BI-COLOR
(3-LEAD WIRE)

Mounting Hardware (Included for flat and semi dome lenses)

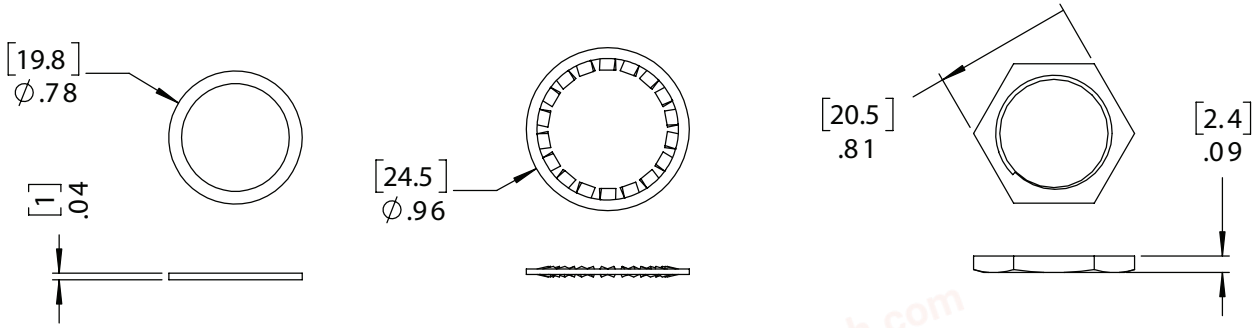

Washer: EPDM

Lock Washer: SPCC Nickel Plated

Hex Nut: Brass Nickel Plated

Notes:
1. All dimensions are in inches [millimeters]
2. Tolerance is ±[0.25] 0.01 unless otherwise noted.
3. The specifications, characteristics and technical data described in the datasheet are subject to change without prior notice.

chanhvinh.com

Product Specifications

Materials	
Housing	White Polycarbonate UL 94-V-0
Lens	White Polycarbonate UL 94-V-0
	UV Material Polycarbonate Resin (Semi Dome Lens Only)
Bezel	Plated, Black Color Finish
Wire Leads	Tinned Copper Conductor PVC Insulation
Washer (Installed)	EPDM Rubber
Lock Washer	SPCC, Nickel Plated
Hex Nut	Brass, Nickel Plated

Installation Specifications	
Mounting Hole ("D" Shape)	11/16" or 0.688" (17.46 mm)
Panel Thickness (max.)	0.156" (3.96 mm)
Wire Leads	24 AWG - UL1430 Rated, 5.5" (140 mm) long. Stripped .5" Single Color Anode (+): Red lead Bi-Color Anodes Options (+): Green, Red, Blue or Yellow leads (Wire color matches LED color)
Mounting Torque	15 in-lbs (17.28 kg-cm)

Electrical Specifications	
Operating Voltage	5 VDC to 28 VDC (flex voltage)
Operating Current	20mA (max.)

Temperature Specifications	
Operating Temperature	25°C to +80°C -13°F to +176°C
Storage Temperature	25°C to +80°C -13°F to +176°C

Compliances and Approvals

REACH COMPLIANCE · RoHS COMPLIANT · IP67