chanhvinh.com

LPC Series
0.171” (4.34mm) Round Rigid Fresnel Light Pipe

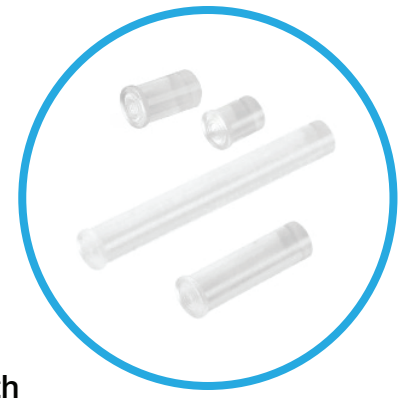

Features 4mm round fresnel light pipe mount securely to display panel with wide viewing angle at 160 degrees

Applications

- Audio/Video
- Communication
- Darkroom Equipment
- Industrial
- Medical
- IoT
- Security
- Studio control
- Transportation

Key Features

- Panel mounting hole .171” (4.34mm) Diameter
- Light pipe from .110” to .500” use grommet retainer RTN 150
- Light pipe .500” to 2.00” the spring retainer RTN 250 is recommended for rigidity
- Standoff used to adjust the height of a standard LED above the PCB to maintain a maximum - .050” clearance between Light pipe and LED
- Acrylic (Clear Optical Grade) UL 94-HB for maximum light transmission
- Wide viewing angle at 160˚
- Operating Temperature: 80˚C Max

chanhvinh.com

Ordering Data

Series		Length Code (Min 011=.110” / Max 200=2.000”)		Color
LPC	_	120	_	CTP

011	036	056	074	092	112	135	157	180
020	038	058	076	094	115	137	160	182
022	040	060	078	096	117	140	162	187
024	042	062	080	098	120	142	165	190
026	044	064	082	100	122	145	167	197
028	046	066	084	102	125	147	170	200
030	048	068	086	105	127	150	172	
032	050	070	088	107	130	152	175	
034	054	072	090	110	132	155	177	

Color	
CTP	Clear

Special lengths upon request

Example:
LPC_120_CTP
LPC Series 1.200” Length Light Pipe

Recommended Retainer for LPC Series (order separately)

Light pipe from .110” to .500” use grommet retainer RTN 150
Light pipe .500” to 2.00” the spring retainer RTN 250 is recommended for rigidity



RTN 150



RTN 250

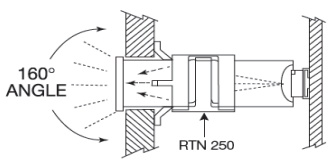

chanhvinh.com

Product Specifications

Materials
One piece Acrylic (Clear Optical Grade) UL 94-HB

Installation Specifications	
Mounting Hole	0.171” (4.34mm)
Panel Thickness (min.)	-

Product Dimensions

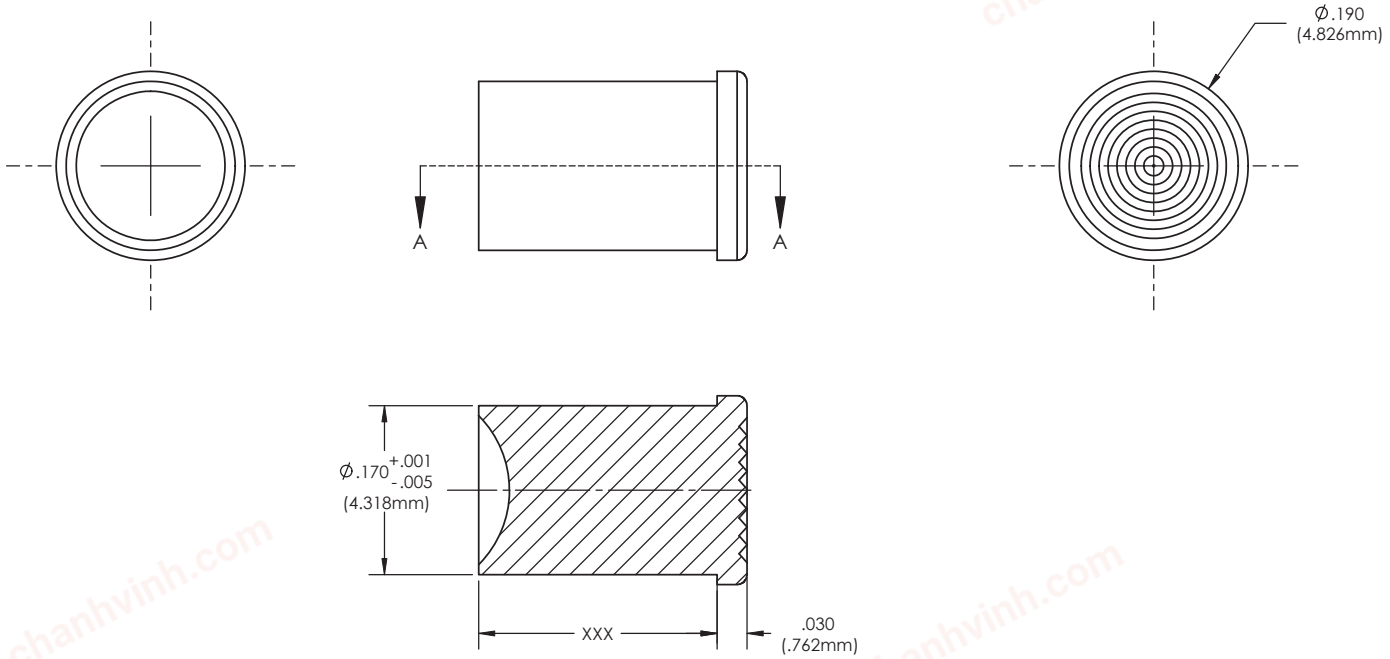

Recommended Mounting Hole

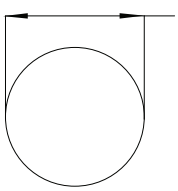

Ø 0.171in +0.005in/-0.000in
[Ø 4.34mm] +0.127mm/-0.000mm

Notes:
1. All dimensions are in inches [millimeters]
2. The specifications, characteristics and technical data described in the datasheet are subject to change without prior notice.

Compliances and Approvals

REACH COMPLIANCE

RoHS COMPLIANT