chanhvinh.com

LCS Series
0.313” (7.95mm)
Moisture Sealed Rigid Light Pipe



Key features

1. **Mounting:** Mounts in a Ø 0.313"~0.337"(7.95mm~8.55mm) panel hole on .500” (12.7mm) centers. Panel thickness .031” (.8mm) to .125” (3.18mm).
2. **Assembly:** Insert lightpipe through the panel hole, slide lock washer onto lens barrel on lightpipe and twist on retaining ring. Slide PCB into position aligning LED with the end of the lightpipe unit.
3. **Material:** Lightpipe - Acrylic (Clear optical grade) UL 94-HB
   Lens - Polycarbonate UL 94-V2
   Seal - EPDM
   Retaining Nut - Thermoplastic (white) UL 94-HB
   Lock Washer - CR Steel, Nickel Plate
4. Meets NEMA 6P/IP 67 standards
5. Viewing Angle: 60˚
6. Max torque nut should be tightened to is 1.8lb-in. (Product begins to fail at 3.2lb-in)
7. Operating Temperature range: -40C to 102C
   - Light pipe: -40C ~ 102C
   - Lens: -40C ~ 126C
   - Seal(EPDM 70A): -53.8C ~ 148.8C
   - Nut: -60C ~ 120C
   - Washer(CR steel)

chanhvinh.com

Product Dimensions

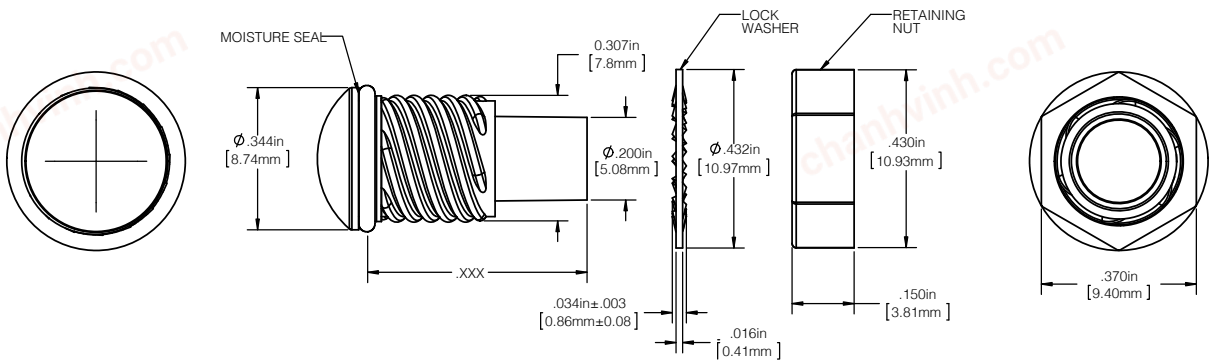

Ordering Code: LCS_□□□_□□□

Lightpipe	
	Length
032	.320”
052	.520”
072	.720”
092	.920”
112	1.12”
132	1.32”
177	1.77”

Lens	
	Color
RTP	Red Transparent
ATP	Amber Transparent
GTP	Green Transparent
BTP	Blue Transparent
YTP	Yellow Transparent
CTP	Clear Transparent

Note: LCS_032_BTP not available

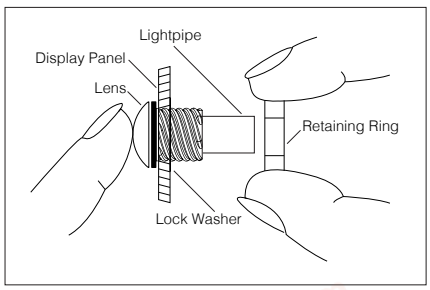

Dimensions Style Inches [MM] General Tolerances Unless Otherwise Specified		
	Inches	Length
.X	± .020	± .508
.XX	± .015	± .381
.XXX	± .005	± .127
Angle ± 1'		
Break All Corners And Sharp Edges .030 Max		

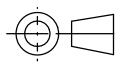

Product Specifications

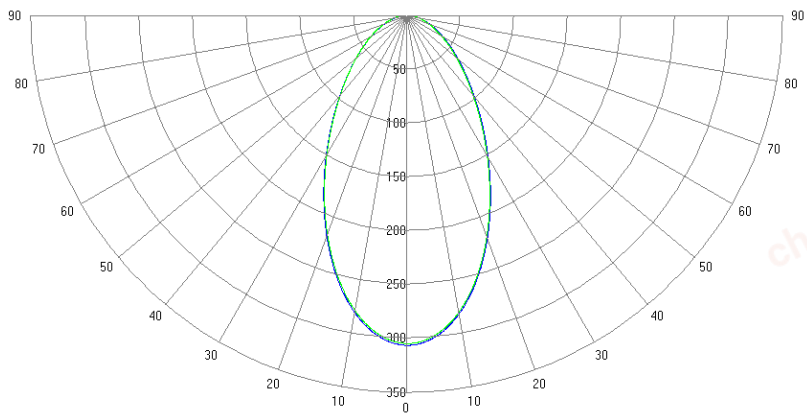

Viewing Angle: 60˚