chanhvinh.com

7513 Series
Clear Rigid Right Angle UL 94-V0 Board Mount Light Pipe



7513D2-S and 7513D2-L Board Mount Right Angle Light Pipes

Key Features

- Made of optical grade polycarbonate clear material
- UL94 V-0 Rating
- Viewing surface to have a matte finish for wide angle viewing
- Precision engineered with ray tracing for bright, optically precise even indication and attractive appearance
- ESD protection from circuitry for exceptional reliability
- Optimized for use with Bright Chips SMT LEDs
- Parts inserted after reflow to permit LED pad inspection before assembly
- Low profile for height constrained applications
- Operating temp: -40°C to 105°C
- RoHS and REACH Compliant

Product Dimensions

7513D2-S

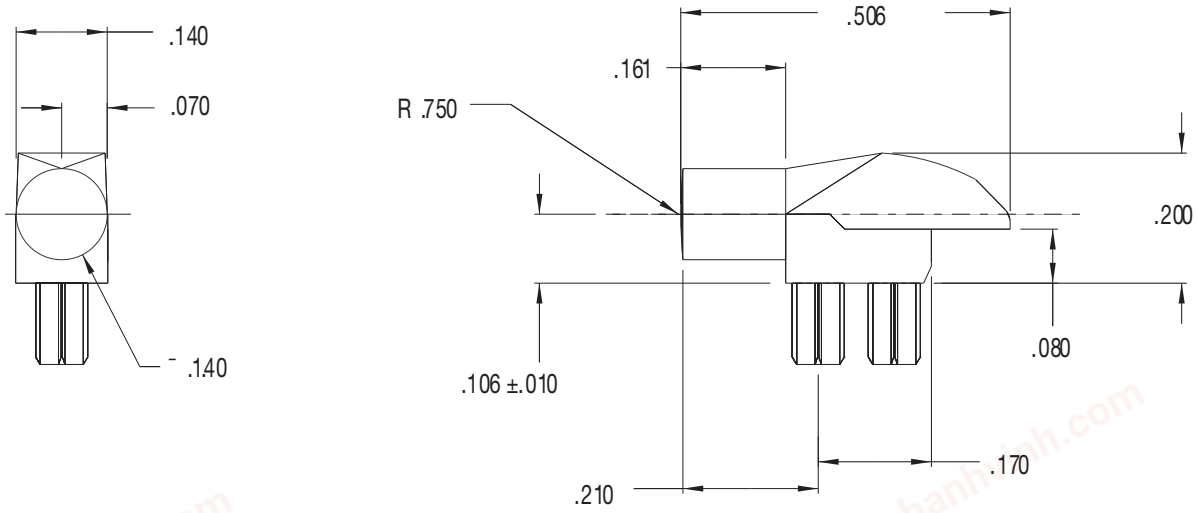

Notes:
1. All dimensions are in inches

chanhvinh.com

Product Dimensions

7513D2-L

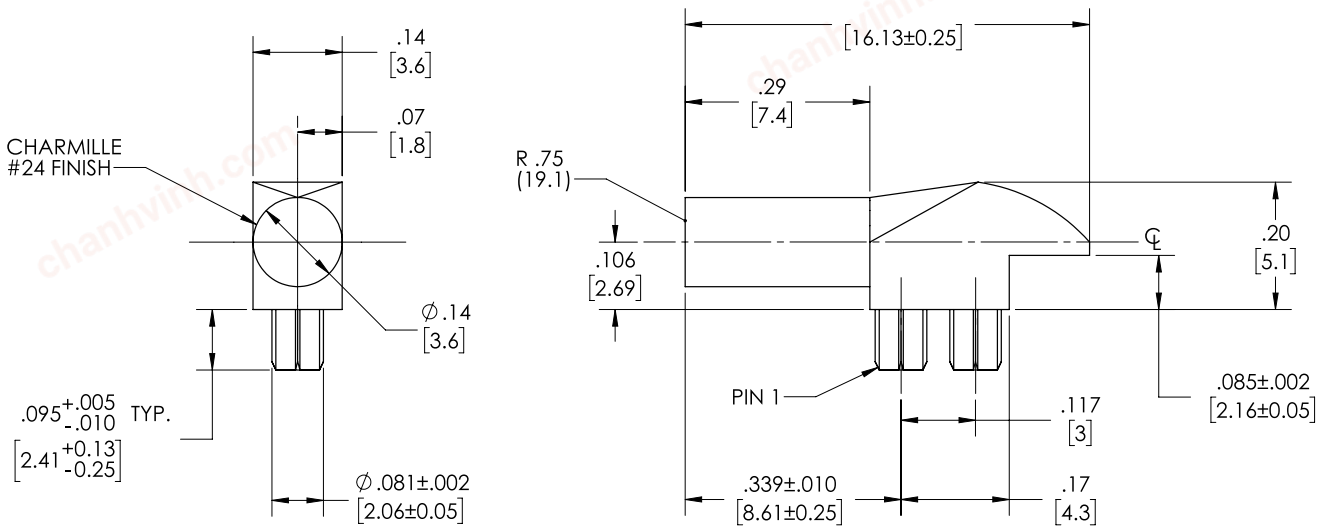

Recommended Mounting Hole and LED Configuration

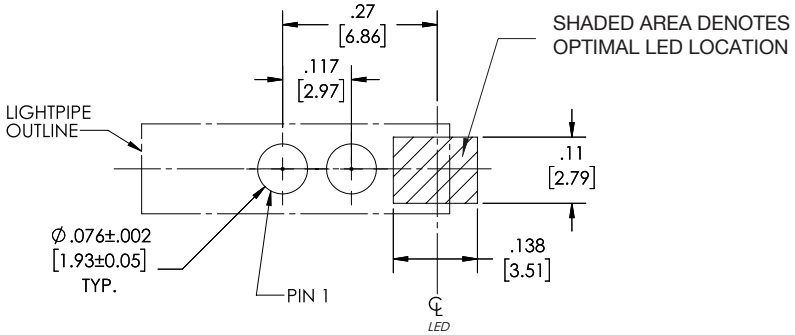

Notes:
1. All dimensions are in inches [millimeter]
2. LED Configuration: Shaded area denotes recommended led location

Compliances and Approvals