chanhvinh.com

CML
A VCC PRODUCT FAMILY

engineered to light up your design
www.vcclite.com
1.800.522.5546

2191QL Series Non-Relampable LED Solid-State Indicator Lights

Description and Features

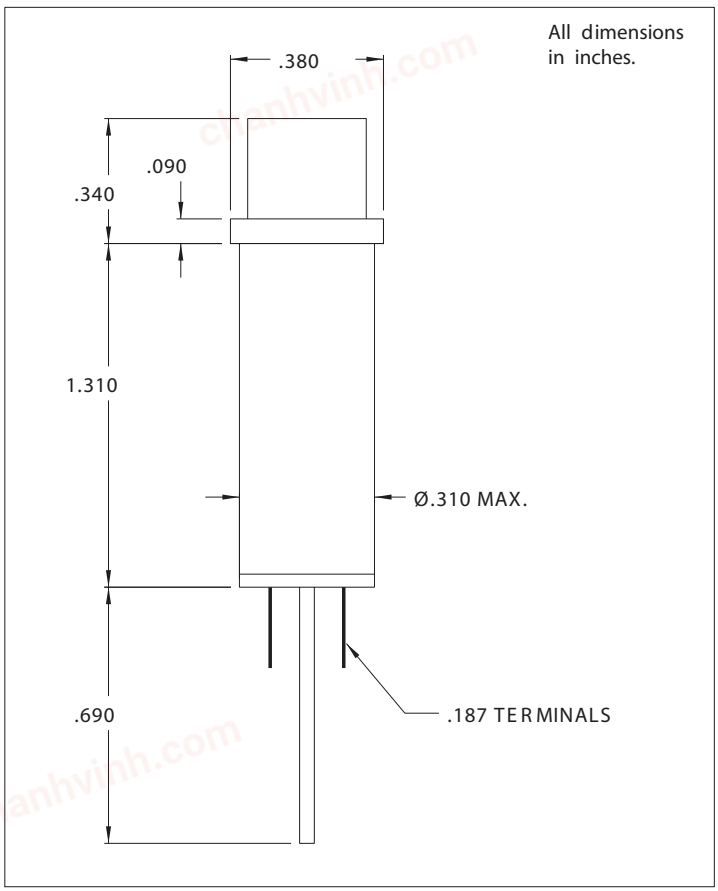

Solid-state indicator lights complete with built-in current-limiting resistor and rectifier diode.

Mounting: Ø.310 MIN., supplied with push-on speednut SN1287.

Terminals: Quick-connect, tinned brass .187 x .020

Lens: Polycarbonate

Anode(+): Marked above terminal

Bezel: Polished stainless steel.

Housing: White Nylon

Lens Color	LED Solid State Indicator	
	Model No. (12V)	Model No. (24V)
Red	2191QL1-12V	2191QL1-24V
Green	2191QL5-12V	2191QL5-24V
Yellow	2191QL7-12V	2191QL7-24V
Internal Resistor (ohms)	390	1000

Lens Color	Incorporates LED*
Red	4304H1
Green	4304H5
Yellow	4304H7

* Also incorporates 1N4004 (400 P.I.V.) rectifier diode.

Voltage Table		
Nominal	VAC	VDC
12V	10 to 20	6 to 13.5
24V	22 to 32	12 to 24

To use 24V model: Beyond 32VAC add 30 ohms per volt; beyond 24 VDC add 50 ohms per volt. Use 1/2W resistor up to 50V; 1W resistor for 50V to 70V; 2W resistor for 75V to 125V. Do not use beyond 125V.

CML and Chicago Miniature Lamp are registered trademarks of Visual Communications Company, LLC.