chanhvinh.com

TRACO POWER

DC/DC Railway Converter

TMR 6WIR Series, 6 Watt

- **Compact SIP-8 metal case**
- **EN 50155 railway approval**
- **Ultra wide 4:1 Input: 9–36, 18–75 and 43–160 VDC**
- **I/O-isolation 3‘000 VDC**
- **Fully regulated outputs**
- **Operating temperature range –40°C to +80°C**
- **Short circuit protection and current limitation**
- **Remote On/Off**
- **3-year product warranty**



UL 62368-1 IEC 62368-1

The TMR 6WIR series is a set of 6 Watt DC/DC converters in a SIP-8 metal case. They operate up to 60°C environment temperature at full load and up to 80°C with a 50% load derating. With EN 50155 and UL 60950-1 certification, 3’000 VDC I/O-isolation voltage, external On/Off, current limitation and short circuit protection they cover a wide range of application when space is limited. The input of the converters is designed for a wide voltage range (4:1) and minimum load is not required.

Models

Order Code	Input Voltage Range	Output 1		Output 2		Efficiency
		Vnom	Imax	Vnom	Imax	typ.
TMR 6-2410WIR	9 - 36 VDC (24 VDC nom.)	3.3 VDC	1'500 mA			81 %
TMR 6-2411WIR		5 VDC	1'200 mA			84 %
TMR 6-2419WIR		9 VDC	666 mA			86 %
TMR 6-2412WIR		12 VDC	500 mA			87 %
TMR 6-2413WIR		15 VDC	400 mA			88 %
TMR 6-2415WIR		24 VDC	250 mA			87 %
TMR 6-2421WIR		+5 VDC	600 mA	–5 VDC	600 mA	84 %
TMR 6-2422WIR		+12 VDC	250 mA	–12 VDC	250 mA	87 %
TMR 6-2423WIR		+15 VDC	200 mA	–15 VDC	200 mA	87 %
TMR 6-4810WIR	18 - 75 VDC (48 VDC nom.)	3.3 VDC	1'500 mA			81 %
TMR 6-4811WIR		5 VDC	1'200 mA			84 %
TMR 6-4819WIR		9 VDC	666 mA			85 %
TMR 6-4812WIR		12 VDC	500 mA			87 %
TMR 6-4813WIR		15 VDC	400 mA			87 %
TMR 6-4815WIR		24 VDC	250 mA			87 %
TMR 6-4821WIR		+5 VDC	600 mA	–5 VDC	600 mA	84 %
TMR 6-4822WIR		+12 VDC	250 mA	–12 VDC	250 mA	87 %
TMR 6-4823WIR		+15 VDC	200 mA	–15 VDC	200 mA	87 %
TMR 6-7210WIR	43 - 160 VDC (110 VDC nom.)	3.3 VDC	1'500 mA			80 %
TMR 6-7211WIR		5 VDC	1'200 mA			83 %
TMR 6-7219WIR		9 VDC	666 mA			85 %
TMR 6-7212WIR		12 VDC	500 mA			86 %
TMR 6-7213WIR		15 VDC	400 mA			86 %
TMR 6-7215WIR		24 VDC	250 mA			86 %
TMR 6-7221WIR		+5 VDC	600 mA	–5 VDC	600 mA	83 %
TMR 6-7222WIR		+12 VDC	250 mA	–12 VDC	250 mA	86 %
TMR 6-7223WIR		+15 VDC	200 mA	–15 VDC	200 mA	86 %

chanhvinh.com

Input Specifications

Input Current	- At no load	24 Vin models:	6 mA typ.
		48 Vin models:	6 mA typ.
		110 Vin models:	2 mA typ.
Surge Voltage		24 Vin models:	50 VDC max. (1 s max.)
		48 Vin models:	100 VDC max. (1 s max.)
		110 Vin models:	185 VDC max. (1 s max.)
Recommended Input Fuse		24 Vin models:	1'250 mA (slow blow)
		48 Vin models:	630 mA (slow blow)
		110 Vin models:	315 mA (slow blow)
			(The need of an external fuse has to be assessed in the final application.)
Input Filter			Internal Capacitor

Output Specifications

Voltage Set Accuracy			±1% max.
Regulation	- Input Variation (Vmin - Vmax)	single output models:	0.2% max.
		dual output models:	0.2% max.
	- Load Variation (0 - 100%)	single output models:	0.5% max.
		dual output models:	1% max. (Output 1)
			1% max. (Output 2)
	- Cross Regulation (25% / 100% asym. load)	dual output models:	5% max.
Ripple and Noise	- 20 MHz Bandwidth		75 mVp-p max.
			50 mVp-p typ.
Capacitive Load	- single output	3.3 Vout models:	2'200 µF max.
		5 Vout models:	1'100 µF max.
		9 Vout models:	680 µF max.
		12 Vout models:	470 µF max.
		15 Vout models:	470 µF max.
		24 Vout models:	180 µF max.
	- dual output	5 / -5 Vout models:	680 / 680 µF max.
		12 / -12 Vout models:	330 / 330 µF max.
		15 / -15 Vout models:	180 / 180 µF max.
Minimum Load			Not required
Temperature Coefficient			±0.02 %/K max.
Hold-up Time			10 ms min. (acc. to EN 50155 Class S2, see application note for ext. capacitor calculation: www.tracopower.com/info/holdup_en50155.pdf)
Start-up Time			50 ms typ. / 75 ms max.
Short Circuit Protection			Continuous, Automatic recovery
Output Current Limitation			180% typ. of Iout max.
Transient Response	- Response Time		250 µs typ. (25% Load Step)

Safety Specifications

Standards	- IT / Multimedia Equipment	EN 62368-1
		IEC 62368-1
		UL 62368-1
	- Railway Applications	EN 50155
	- Certification Documents	www.tracopower.com/overview/tmr6wir
Pollution Degree		PD 2

All specifications valid at nominal voltage, resistive full load and +25°C after warm-up time, unless otherwise stated.

chanhvinh.com

EMC Specifications

EMI Emissions			EN 50121-3-2 (EMC for Rolling Stock)
	- Conducted Emissions		EN 55011 class A (with external filter)
			EN 55011 class B (with external filter)
			EN 55032 class A (with external filter)
			EN 55032 class B (with external filter)
	- Radiated Emissions		EN 55011 class A (with external filter)
			EN 55011 class B (with external filter)
			EN 55032 class A (with external filter)
			EN 55032 class B (with external filter)
		External filter proposal:	www.tracopower.com/overview/tmr6wir
EMS Immunity			EN 50121-3-2 (EMC for Rolling Stock)
	- Electrostatic Discharge	Air:	EN 61000-4-2, ±8 kV, perf. criteria A
		Contact:	EN 61000-4-2, ±6 kV, perf. criteria A
	- RF Electromagnetic Field		EN 61000-4-3, 20 V/m, perf. criteria A
	- EFT (Burst) / Surge		EN 61000-4-4, ±2 kV, perf. criteria A
			EN 61000-4-5, ±2 kV, perf. criteria A
		Ext. input component:	24 Vin models: KY 220 µF ‖TVS (SMDJ70A)
			48 Vin models: KY 220 µF ‖ TVS (SMDJ120A)
			110 Vin models: KY 150 µF ‖ TVS (SMB250A)
	- Conducted RF Disturbances		EN 61000-4-6, 10 Vrms, perf. criteria A
	- PF Magnetic Field	Continuous:	EN 61000-4-8, 100 A/m, perf. criteria A

General Specifications

Relative Humidity			95% max. (non condensing)
Temperature Ranges	- Operating Temperature		–40°C to +80°C
	- Case Temperature		+100°C max.
	- Storage Temperature		–55°C to +125°C
Power Derating	- High Temperature		2.5 %/K above 60°C
		See application note:	www.tracopower.com/overview/tmr6wir
Cooling System			Natural convection (20 LFM)
Remote Control	- Voltage Controlled Remote (passive = on)		On: 0 to 0.5 VDC or open circuit
			Off: 3 to 12 VDC
			Refers to 'Remote' and '-Vin' Pin
	- Off Idle Input Current		2.5 mA typ.
Altitude During Operation			5'000 m max.
Regulator Topology			Flyback Converter
Switching Frequency			270 - 330 kHz (PWM) (110 Vin model)
			520 - 640 kHz (PWM) (other input models)
Insulation System			Functional Insulation
Isolation Test Voltage	- Input to Output, 60 s		3'000 VDC
	- Input to Case, 60 s		1'500 VDC
Isolation Resistance	- Input to Output, 500 VDC		1'000 MΩ min.
Isolation Capacitance	- Input to Output, 100 kHz, 1 V		100 pF max.
Reliability	- Calculated MTBF		2'950'000 h (MIL-HDBK-217F, ground benign)
Washing Process			According to Cleaning Guideline
			www.tracopower.com/info/cleaning.pdf
Environment	- Vibration		MIL-STD-810F
			EN 61373
	- Mechanical Shock		MIL-STD-810F
			EN 61373
	- Thermal Shock		MIL-STD-810F
	- Flammability		EN 45545-2
			www.tracopower.com/info/en45545-declaration.pdf
Housing Material			Copper
Potting Material			Silicone (UL 94 V-0 rated)

All specifications valid at nominal voltage, resistive full load and +25°C after warm-up time, unless otherwise stated.

chanhvinh.com

Pin Material		Copper
Pin Foundation Plating		Nickel (1 - 2 µm)
Pin Surface Plating		Tin (3 - 5 µm), matte
Housing Type		Metal Case
Mounting Type		PCB Mount
Connection Type		THD (Through-Hole Device)
Footprint Type		SIP8
Soldering Profile		Lead-Free Wave Soldering 265°C / 10 s max.
Weight		5.9 g
Environmental Compliance	- REACH Declaration	www.tracopower.com/info/reach-declaration.pdf REACH SVHC list compliant REACH Annex XVII compliant
	- RoHS Declaration	www.tracopower.com/info/rohs-declaration.pdf Exemptions: 7a, 7c-I (RoHS exemptions refer to the component concentration only, not to the overall concentration in the product (O5A rule).)
	- SCIP Reference Number	3a804e11-6b21-4fc8-b610-94217363ca4a

Supporting Documents

Overview Link (for additional Documents)	www.tracopower.com/overview/tmr6wir

Outline Dimensions

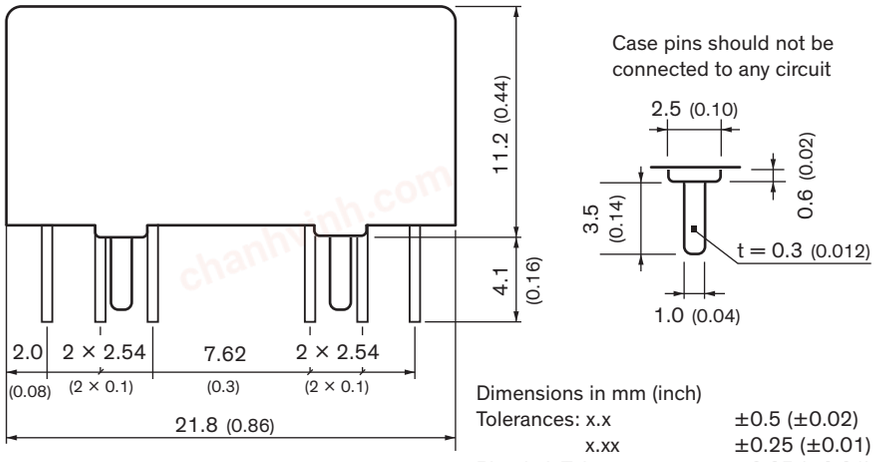

Dimensions in mm (inch)

Tolerances: x.x	±0.5 (±0.02)
x.xx	±0.25 (±0.01)
Pin pitch Tolerance	±0.25 (±0.01)
Pin dimension tolerance	±0.1 (±0.004)

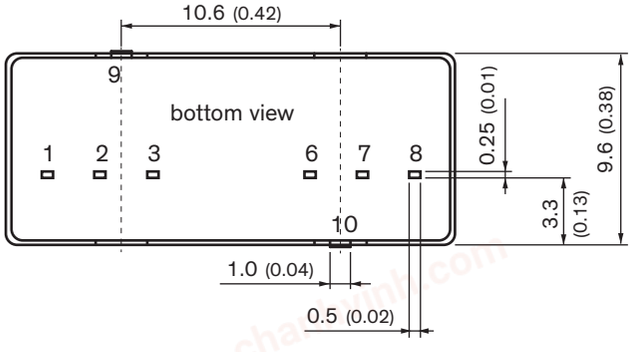

Pinout

Pin	Single Output	Dual Output
1	–Vin (GND)	–Vin (GND)
2	+Vin (Vcc)	+Vin (Vcc)
3	Remote	Remote
6	+Vout	+Vout
7	–Vout	Common
8	NC	–Vout
9, 10	Case	Case

NC: Not connected

© Copyright 2024 Traco Electronic AG