chanhvinh.com

TOSHIBA CMOS Digital Integrated Circuit Silicon Monolithic

TC7WH240FU,TC7WH240FK

Dual Bus Buffer Inverted, 3-State Outputs

The TC7WH240 is an advanced high speed CMOS DUAL BUS BUFFERS fabricated with silicon gate CMOS technology.

They schieve the high speed operation similar to equivalent Bipolar Schottky TTL while maintaining the CMOS low power dissipation. The 7WH240 is an inverting 3-state buffer having two active-low output enables.

This device is designed to be used with 3-state memory address drivers, etc.

An input protection circuit ensures that 0 to 7 V can be applied to the input pins without regard to the supply voltage.

This device can be used to interface 5 V to 3 V systems and two supply systems such as battery back up. This circuit prevents device destruction due to mismatched supply and input voltages.

TC7WH240FU

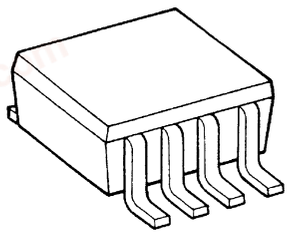

SSOP8-P-0.65

TC7WH240FK

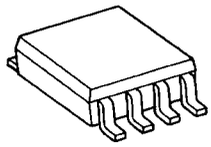

SSOP8-P-0.50A

Weight
SSOP8-P-0.65: 0.02 g (typ.)
SSOP8-P-0.50A: 0.01 g (typ.)

Features

- High speed: t_{pd} = 3.6 ns (typ.) at V_{CC} = 5 V
- Low power dissipation: I_{CC} = 2 μA (max) at Ta = 25°C
- High noise immunity: $V_{NIH} = V_{NIL}$ = 28% V_{CC} (min)
- 5.5V Tolerant inputs.
- Balanced propagation delays: $t_{pLH} \simeq t_{pHL}$
- Wide operating voltage range: V_{CC} (opr) = 2~5.5 V
- Low Noise : V_{OLP} = 0.8 V (max.)

Marking

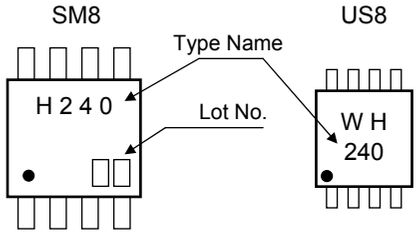

Pin Assignment (top view)

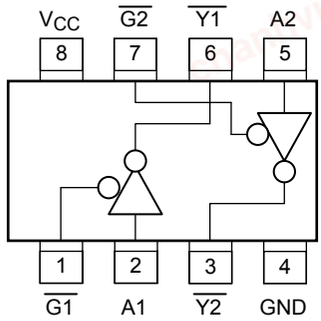

chanhvinh.com

Absolute Maximum Ratings (Ta = 25°C)

Characteristics	Symbol	Rating	Unit
Supply voltage range	V_{CC}	−0.5~7.0	V
DC input voltage	V_{IN}	−0.5~7.0	V
DC output voltage	V_{OUT}	−0.5~V_{CC} + 0.5	V
Input diode current	I_{IK}	−20	mA
Output diode current	I_{OK}	±20	mA
DC output current	I_{OUT}	±25	mA
DC V_{CC}/ground current	I_{CC}	±50	mA
Power dissipation	P_D	300 (SM8)	mW
		200 (US8)	
Storage temperature	T_{stg}	−65~150	°C
Lead temperature (10 s)	T_L	260	°C

Note: Using continuously under heavy loads (e.g. the application of high temperature/current/voltage and the significant change in temperature, etc.) may cause this product to decrease in the reliability significantly even if the operating conditions (i.e. operating temperature/current/voltage, etc.) are within the absolute maximum ratings and the operating ranges.
Please design the appropriate reliability upon reviewing the Toshiba Semiconductor Reliability Handbook (“Handling Precautions”/“Derating Concept and Methods”) and individual reliability data (i.e. reliability test report and estimated failure rate, etc).

Logic Diagram

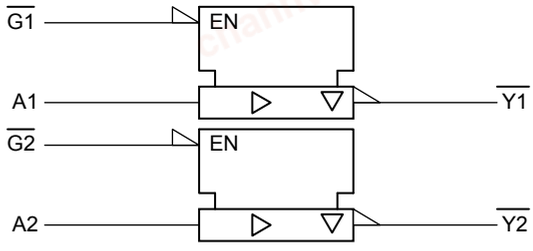

Truth Table

INPUTS		OUTPUTS
$\overline{G}$	A	$\overline{Y}$
L	L	H
L	H	L
H	X	Z

X : Don’t Care
Z : High Impedance

Operating Ranges

Characteristics	Symbol	Rating	Unit
Supply voltage	V_{CC}	2.0~5.5	V
Input voltage	V_{IN}	0~5.5	V
Output voltage	V_{OUT}	0~V_{CC}	V
Operating temperature	T_{opr}	−40~85	°C
Input rise and fall time	dt/dv	0~100 (V_{CC} = 3.3 ± 0.3 V)	ns/V
		0~20 (V_{CC} = 5 ± 0.5 V)	

chanhvinh.com

Electrical Characteristics

DC Characteristics

Characteristics	Symbol	Test Condition		V_{CC} (V)	Ta = 25°C Min	Ta = 25°C Typ.	Ta = 25°C Max	Ta = −40~85°C Min	Ta = −40~85°C Max	Unit
High-level input voltage	V_{IH}	—		2.0	1.50	—	—	1.50	—	V
				3.0~5.5	V_{CC} × 0.7	—	—	V_{CC} × 0.7	—	
Low-level input voltage	V_{IL}	—		2.0	—	—	0.50	—	0.50	V
				3.0~5.5	—	—	V_{CC} × 0.3	—	V_{CC} × 0.3	
High-level output voltage	V_{OH}	V_{IN} = V_{IH} or V_{IL}	I_{OH} = −50 μA	2.0	1.9	2.0	—	1.9	—	V
				3.0	2.9	3.0	—	2.9	—	
				4.5	4.4	4.5	—	4.4	—	
			I_{OH} = −4 mA	3.0	2.58	—	—	2.48	—	
			I_{OH} = −8 mA	4.5	3.94	—	—	3.80	—	
Low-level output voltage	V_{OL}	V_{IN} = V_{IH} or V_{IL}	I_{OL} = 50 μA	2.0	—	0.0	0.1	—	0.1	V
				3.0	—	0.0	0.1	—	0.1	
				4.5	—	0.0	0.1	—	0.1	
			I_{OL} = 4 mA	3.0	—	—	0.36	—	0.44	
			I_{OL} = 8 mA	4.5	—	—	0.36	—	0.44	
3-State Output Off-State Current	I_{OZ}	V_{IN} = V_{IH} or V_{IL} V_{OUT} = V_{CC} or GND		5.5	—	—	±0.1	—	±1.0	μA
Input leakage current	I_{IN}	V_{IN} = 5.5 V or GND		0~5.5	—	—	±0.1	—	±1.0	μA
Quiescent supply current	I_{CC}	V_{IN} = V_{CC} or GND		5.5	—	—	2.0	—	20.0	μA

chanhvinh.com

AC Characteristics (Input: $t_r = t_f = 3$ ns)

Characteristics	Symbol	Test Condition			Ta = 25°C			Ta = −40~85°C		Unit
			V_{CC} (V)	C_L (pF)	Min.	Typ.	Max.	Min.	Max.	
Propagation Delay Time	t_{pLH} t_{pHL}		3.3 ± 0.3	15	—	5.3	7.5	1.0	9.0	ns
				50	—	7.8	11.0	1.0	12.5	
			5.0 ± 0.5	15	—	3.6	5.5	1.0	6.5	
				50	—	5.1	7.5	1.0	8.5	
3-State Output Enable Time	t_{pZL} t_{pZH}	R_L = 1kΩ	3.3 ± 0.3	15	—	6.6	10.6	1.0	12.5	ns
				50	—	9.1	14.1	1.0	16.0	
			5.0 ± 0.5	15	—	4.7	7.3	1.0	8.5	
				50	—	6.2	9.3	1.0	10.5	
3-State Output Disable Time	t_{pLZ} t_{pHZ}	R_L = 1kΩ	3.3 ± 0.3	50	—	10.3	14.0	1.0	16.0	ns
			5.0 ± 0.5	50	—	6.7	9.2	1.0	10.5	
Output to Output Skew	tos_{LH} tos_{HL}	(Note 1)	3.3 ± 0.3	50	—	—	1.5	—	1.5	ns
			5.0 ± 0.5	50	—	—	1.0	—	1.0	
Input Capacitance	C_{IN}				—	4	10	—	10	pF
Output Capacitance	$C_{I/O}$				—	6	—	—	—	pF
Power Dissipation Capacitance (Note 2)	C_{PD}				—	17	—	—	—	pF

Note 1 : Parameter guaranteed by design.
tosLH = |tpLHm − tpLHn|, tosHL = |tpHLm − tpHLn|

Note 2: C_{PD} is defined as the value of the internal equivalent capacitance which is calculated from the operating current consumption without load.
Average operating current can be obtained by the equation :
$I_{CC\ (opr)} = C_{PD} \cdot V_{CC} \cdot f_{IN} + I_{CC}/2$

Noise Characteristics (Ta = 25°C, input: $t_r = t_f = 3$ ns)

Characteristics	Symbol	Test Condition		Typ.	Limit	Unit
			V_{CC} (V)			
Quiet output maximum dynamic V_{OL}	V_{OLP}	C_L = 50 pF	5.0	0.3	0.8	V
Quiet output minimum dynamic V_{OL}	V_{OLV}	C_L = 50 pF	5.0	−0.3	−0.8	V
Minimum high level dynamic input voltage	V_{IHD}	C_L = 50 pF	5.0	—	3.5	V
Maximum low level dynamic input voltage	V_{ILD}	C_L = 50 pF	5.0	—	1.5	V

Input Equivalent Circuit

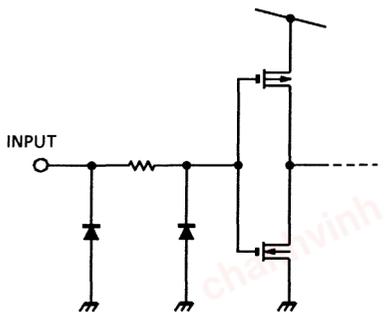

chanhvinh.com

Package Dimensions

SSOP8-P-0.65 Unit : mm

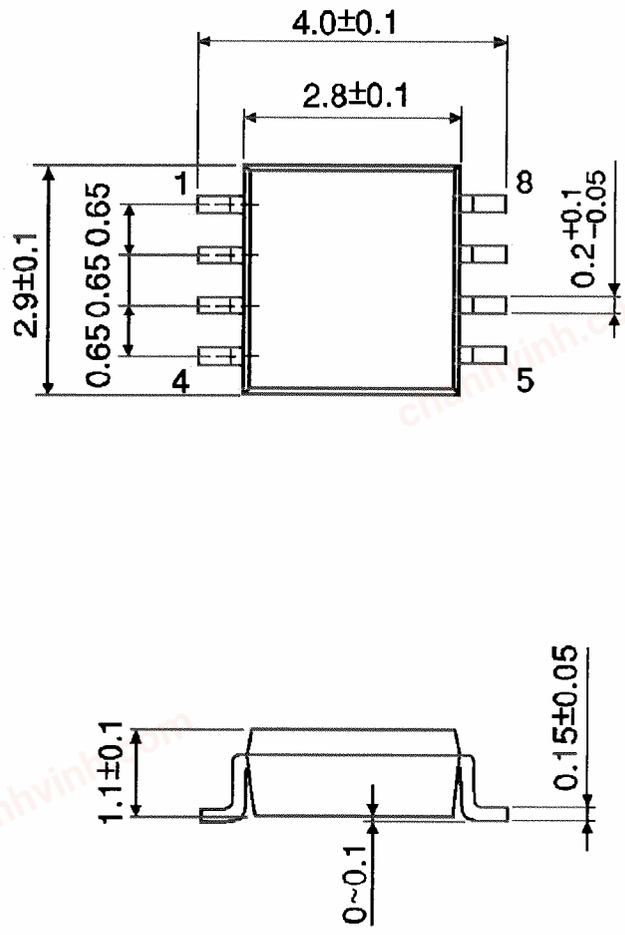

Weight: 0.02 g (typ.)

chanhvinh.com

Package Dimensions

SSOP8-P-0.50A Unit : mm

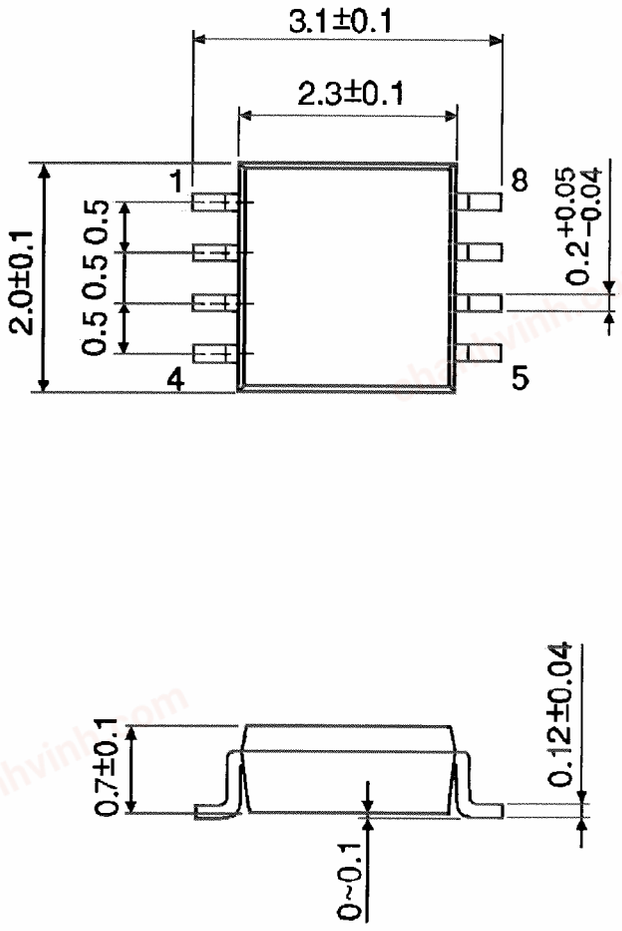

Weight: 0.01 g (typ.)

chanhvinh.com

RESTRICTIONS ON PRODUCT USE

20070701-EN GENERAL

- The information contained herein is subject to change without notice.
- TOSHIBA is continually working to improve the quality and reliability of its products. Nevertheless, semiconductor devices in general can malfunction or fail due to their inherent electrical sensitivity and vulnerability to physical stress. It is the responsibility of the buyer, when utilizing TOSHIBA products, to comply with the standards of safety in making a safe design for the entire system, and to avoid situations in which a malfunction or failure of such TOSHIBA products could cause loss of human life, bodily injury or damage to property.
  In developing your designs, please ensure that TOSHIBA products are used within specified operating ranges as set forth in the most recent TOSHIBA products specifications. Also, please keep in mind the precautions and conditions set forth in the “Handling Guide for Semiconductor Devices,” or “TOSHIBA Semiconductor Reliability Handbook” etc.
- The TOSHIBA products listed in this document are intended for usage in general electronics applications (computer, personal equipment, office equipment, measuring equipment, industrial robotics, domestic appliances, etc.).These TOSHIBA products are neither intended nor warranted for usage in equipment that requires extraordinarily high quality and/or reliability or a malfunction or failure of which may cause loss of human life or bodily injury (“Unintended Usage”). Unintended Usage include atomic energy control instruments, airplane or spaceship instruments, transportation instruments, traffic signal instruments, combustion control instruments, medical instruments, all types of safety devices, etc.. Unintended Usage of TOSHIBA products listed in his document shall be made at the customer’s own risk.
- The products described in this document shall not be used or embedded to any downstream products of which manufacture, use and/or sale are prohibited under any applicable laws and regulations.
- The information contained herein is presented only as a guide for the applications of our products. No responsibility is assumed by TOSHIBA for any infringements of patents or other rights of the third parties which may result from its use. No license is granted by implication or otherwise under any patents or other rights of TOSHIBA or the third parties.
- Please contact your sales representative for product-by-product details in this document regarding RoHS compatibility. Please use these products in this document in compliance with all applicable laws and regulations that regulate the inclusion or use of controlled substances. Toshiba assumes no liability for damage or losses occurring as a result of noncompliance with applicable laws and regulations.