chanhvinh.com

SN74LVC3G34 Triple Buffer Gate

1 Features

- Available in the Texas Instruments NanoFree™ Package
- Supports 5.5-V V_{CC} Operation
- Inputs Accept Voltages to 5.5 V
- Max t_{pd} of 4.1 ns at 3.3 V
- Low Power Consumption, 10-µA Maximum I_{CC}
- ±24-mA Output Drive at 3.3 V
- Typical V_{OLP} (Output Ground Bounce) <0.8 V at V_{CC} = 3.3 V, T_A = 25°C
- Typical V_{OHV} (Output V_{OH} Undershoot) >2 V at V_{CC} = 3.3 V, T_A = 25°C
- I_{off} Supports Live Insertion, Partial-Power-Down Mode, and Back-Drive Protection
- Can Be Used as a Down Translator to Translate Inputs From a Maximum of 5.5 V Down to the V_{CC} Level
- Latch-Up Performance Exceeds 100 mA Per JESD 78, Class II
- ESD Protection Exceeds JESD 22
  - 2000-V Human Body Model (A114-A)
  - 200-V Machine Model (A115-A)
  - 1000-V Charged-Device Model (C101)

2 Applications

- AV Receivers
- Audio Docks: Portable
- Blu-ray Players and Home Theaters
- DVD Recorders and Players
- Embedded PCs
- MP3 Players and Recorders (Portable Audio)
- Personal Digital Assistant (PDA)
- Power: Telecom/Server AC/DC Supply: Single Controller: Analog and Digital
- Solid-State Drive (SSD): Client and Enterprise
- TV: LCD/Digital and High-Definition (HDTV)
- Tablets: Enterprise
- Video Analytics: Servers
- Wireless Headsets, Keyboards, and Mice

3 Description

The SN74LVC3G34 device is a triple buffer gate designed for 1.65-V to 5.5-V V_{CC} operation. The SN74LVC3G34 device performs the Boolean function Y = A in positive logic.

NanoFree package technology is a major breakthrough in IC packaging concepts, using the die as the package.

This device is fully specified for partial-power-down applications using I_{off}. The I_{off} circuitry disables the outputs, preventing damaging current backflow through the device when it is powered down.

Device Information(1)

PART NUMBER	PACKAGE	BODY SIZE (NOM)
SN74LVC3G34DCT	SM8 (8)	2.95 mm × 2.80 mm
SN74LVC3G34DCU	VSSOP (8)	2.30 mm × 2.00 mm
SN74LVC3G34YZP	DSBGA (8)	1.91 mm × 0.91 mm

(1) For all available packages, see the orderable addendum at the end of the data sheet.

Simplified Schematic

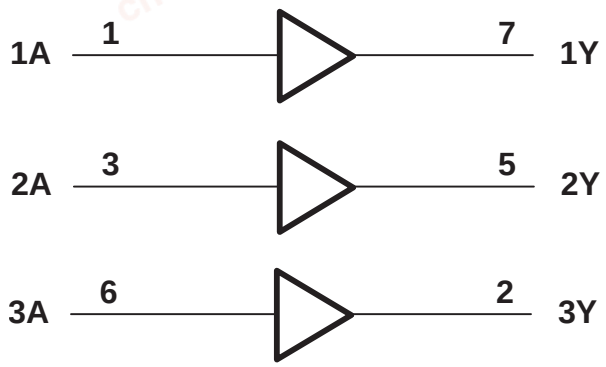

An IMPORTANT NOTICE at the end of this data sheet addresses availability, warranty, changes, use in safety-critical applications, intellectual property matters and other important disclaimers. PRODUCTION DATA.

chanhvinh.com

Table of Contents

1 Features ... 1
2 Applications ... 1
3 Description ... 1
4 Revision History ... 2
5 Pin Configuration and Functions ... 3
6 Specifications ... 3
6.1 Absolute Maximum Ratings ... 3
6.2 ESD Ratings ... 4
6.3 Recommended Operating Conditions ... 4
6.4 Thermal Information ... 4
6.5 Electrical Characteristics ... 5
6.6 Switching Characteristics ... 5
6.7 Operating Characteristics ... 5
6.8 Typical Characteristics ... 6
7 Parameter Measurement Information ... 7
8 Detailed Description ... 8
8.1 Overview ... 8
8.2 Functional Block Diagram ... 8
8.3 Feature Description ... 8
8.4 Device Functional Modes ... 8
9 Application and Implementation ... 9
9.1 Application Information ... 9
9.2 Typical Application ... 9
10 Power Supply Recommendations ... 10
11 Layout ... 10
11.1 Layout Guidelines ... 10
11.2 Layout Example ... 10
12 Device and Documentation Support ... 11
12.1 Documentation Support ... 11
12.2 Community Resources ... 11
12.3 Trademarks ... 11
12.4 Electrostatic Discharge Caution ... 11
12.5 Glossary ... 11
13 Mechanical, Packaging, and Orderable Information ... 11

4 Revision History

NOTE: Page numbers for previous revisions may differ from page numbers in the current version.

Changes from Revision J (Feburary 2007) to Revision K — **Page**

- Updated document to new TI data sheet format. ... 1
- Removed *Ordering Information* table. ... 1
- Updated *Features* section ... 1
- Updated operating temperature range. ... 4

Changes from Revision K (November 2013) to Revision L — **Page**

- Added *Applications*, *Device Information* table, *Pin Configuration and Functions* section, *ESD Ratings* table, *Thermal Information* table, *Typical Characteristics* section, *Feature Description* section, *Device Functional Modes*, *Application and Implementation* section, *Power Supply Recommendations* section, *Layout* section, *Device and Documentation Support* section, and *Mechanical, Packaging, and Orderable Information* section ... 1
- Deleted part number from *Switching Characteristics* table headers. ... 5

Copyright © 2001–2015, Texas Instruments Incorporated

chanhvinh.com

5 Pin Configuration and Functions

DCT Package
8-Pin SM8
Top View

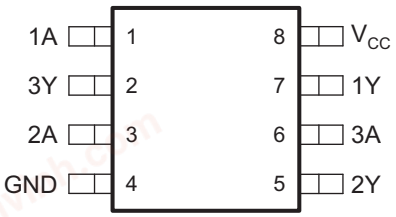

DCU Package
8-Pin VSSOP
Top View

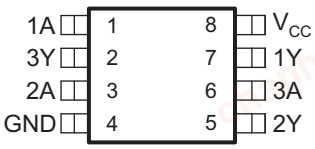

YZP Package
8-Pin DSBGA
Bottom View

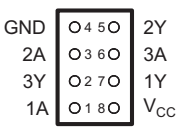

Pin Functions(1)

PIN		I/O	DESCRIPTION
NAME	NO.		
1A	1	I	Buffer Input 1
1Y	7	O	Buffer Output 1
2A	3	I	Buffer Input 2
2Y	5	O	Buffer Output 2
3A	6	I	Buffer Input 3
3Y	2	O	Buffer Output 3
GND	4	—	Ground pin
V_{CC}	8	—	Power pin

(1) See mechanical drawings for dimensions

6 Specifications

6.1 Absolute Maximum Ratings

over operating free-air temperature range (unless otherwise noted)(1)

			MIN	MAX	UNIT
V_{CC}	Supply voltage		–0.5	6.5	V
V_I	Input voltage(2)		–0.5	6.5	V
V_O	Voltage applied to any output in the high-impedance or power-off state(2)		–0.5	6.5	V
V_O	Voltage applied to any output in the high or low state(2)(3)		–0.5	V_{CC} + 0.5	V
I_{IK}	Input clamp current	V_I < 0		–50	mA
I_{OK}	Output clamp current	V_O < 0		–50	mA
I_O	Continuous output current			±50	mA
	Continuous current through V_{CC} or GND			±100	mA
T_J	Junction temperature			150	°C
T_{stg}	Storage temperature		-65	150	°C

(1) Stresses beyond those listed under *Absolute Maximum Ratings* may cause permanent damage to the device. These are stress ratings only, and functional operation of the device at these or any other conditions beyond those indicated under *Recommended Operating Conditions* is not implied. Exposure to absolute-maximum-rated conditions for extended periods may affect device reliability.
(2) The input negative-voltage and output voltage ratings may be exceeded if the input and output clamp-current ratings are observed.
(3) The value of V_{CC} is provided in the *Recommended Operating Conditions* table.

Copyright © 2001–2015, Texas Instruments Incorporated

chanhvinh.com

6.2 ESD Ratings

			VALUE	UNIT
$V_{(ESD)}$	Electrostatic discharge	Human body model (HBM), per ANSI/ESDA/JEDEC JS-001, all pins(1)	2500	V
		Charged-device model (CDM), per JEDEC specification JESD22-C101, all pins(2)	1500	

(1) JEDEC document JEP155 states that 500-V HBM allows safe manufacturing with a standard ESD control process.
(2) JEDEC document JEP157 states that 250-V CDM allows safe manufacturing with a standard ESD control process.

6.3 Recommended Operating Conditions(1)

			MIN	MAX	UNIT
V_{CC}	Supply voltage	Operating	1.65	5.5	V
		Data retention only	1.5		
V_{IH}	High-level input voltage	V_{CC} = 1.65 V to 1.95 V	0.65 × V_{CC}		V
		V_{CC} = 2.3 V to 2.7 V	1.7		
		V_{CC} = 3 V to 3.6 V	2		
		V_{CC} = 4.5 V to 5.5 V	0.7 × V_{CC}		
V_{IL}	Low-level input voltage	V_{CC} = 1.65 V to 1.95 V		0.35 × V_{CC}	V
		V_{CC} = 2.3 V to 2.7 V		0.7	
		V_{CC} = 3 V to 3.6 V		0.8	
		V_{CC} = 4.5 V to 5.5 V		0.3 × V_{CC}	
V_I	Input voltage		0	5.5	V
V_O	Output voltage		0	V_{CC}	V
I_{OH}	High-level output current	V_{CC} = 1.65 V		–4	mA
		V_{CC} = 2.3 V		–8	
		V_{CC} = 3 V		–16	
				–24	
		V_{CC} = 4.5 V		–32	
I_{OL}	Low-level output current	V_{CC} = 1.65 V		4	mA
		V_{CC} = 2.3 V		8	
		V_{CC} = 3 V		16	
				24	
		V_{CC} = 4.5 V		32	
Δt/Δv	Input transition rise or fall rate	V_{CC} = 1.8 V ± 0.15 V, 2.5 V ± 0.2 V		20	ns/V
		V_{CC} = 3.3 V ± 0.3 V		10	
		V_{CC} = 5 V ± 0.5 V		5	
T_A	Operating free-air temperature	DCT, DCU Package	–40	125	°C
		YZP Package	-40	85	

(1) All unused inputs of the device must be held at V_{CC} or GND to ensure proper device operation. Refer to the TI application report, *Implications of Slow or Floating CMOS Inputs*, SCBA004.

6.4 Thermal Information

THERMAL METRIC(1)		SN74LVC3G34			UNIT
		DCT (SM8)	DCU (VSSOP)	YZP (DSBGA)	
		8 PINS	8 PINS	8 PINS	
$R_{\theta JA}$	Junction-to-ambient thermal resistance	220	227	140	°C/W

(1) For more information about traditional and new thermal metrics, see the *Semiconductor and IC Package Thermal Metrics* application report, SPRA953.

Copyright © 2001–2015, Texas Instruments Incorporated

chanhvinh.com

6.5 Electrical Characteristics

over recommended operating free-air temperature range (unless otherwise noted)

PARAMETER		TEST CONDITIONS		V_{CC}	MIN	TYP(1)	MAX	UNIT
V_{OH}		I_{OH} = –100 µA		1.65 V to 5.5 V	V_{CC} – 0.1			V
		I_{OH} = –4 mA		1.65 V	1.2			
		I_{OH} = –8 mA		2.3 V	1.9			
		I_{OH} = –16 mA		3 V	2.4			
		I_{OH} = –24 mA			2.3			
		I_{OH} = –32 mA		4.5 V	3.8			
V_{OL}		I_{OL} = 100 µA		1.65 V to 5.5 V			0.1	V
		I_{OL} = 4 mA		1.65 V			0.45	
		I_{OL} = 8 mA		2.3 V			0.3	
		I_{OL} = 16 mA		3 V			0.4	
		I_{OL} = 24 mA	T_A = –40°C to 85°C	3 V			0.55	
			T_A = –40°C to 125°C				0.75	
		I_{OL} = 32 mA	T_A = –40°C to 85°C	4.5 V			0.55	
			T_A = –40°C to 125°C				0.75	
I_I	A inputs	V_I = 5.5 V or GND		0 to 5.5 V			±5	µA
I_{off}		V_I or V_O = 5.5 V		0			±10	µA
I_{CC}		V_I = 5.5 V or GND,	I_O = 0	1.65 V to 5.5 V			10	µA
ΔI_{CC}		One input at V_{CC} – 0.6 V, Other inputs at V_{CC} or GND		3 V to 5.5 V			500	µA
C_I		V_I = V_{CC} or GND	T_A = –40°C to 85°C	3.3 V		3.5		pF

(1) All typical values are at V_{CC} = 3.3 V, T_A = 25°C.

6.6 Switching Characteristics

over recommended operating free-air temperature range (unless otherwise noted) (see Figure 2)

PARAMETER	FROM (INPUT)	TO (OUTPUT)	OPERATING FREE-AIR TEMPERATURE (T_A)	V_{CC}	MIN	MAX	UNIT
t_{pd}	A	Y	–40°C to 85°C	V_{CC} = 1.8 V ± 0.15 V	3.2	7.9	ns
				V_{CC} = 2.5 V ± 0.2 V	1.5	4.4	
				V_{CC} = 3.3 V ± 0.3 V	1.4	4.1	
				V_{CC} = 5 V ± 0.5 V	1.1	3.2	
t_{pd}	A	Y	–40°C to 125°C	V_{CC} = 1.8 V ± 0.15 V	3.2	8.9	ns
				V_{CC} = 2.5 V ± 0.2 V	1.5	5.4	
				V_{CC} = 3.3 V ± 0.3 V	1.4	5.1	
				V_{CC} = 5 V ± 0.5 V	1.1	3.8	

6.7 Operating Characteristics

T_A = 25°C

PARAMETER		TEST CONDITIONS	V_{CC}	TYP	UNIT
C_{pd}	Power dissipation capacitance	f = 10 MHz	V_{CC} = 1.8 V	19	pF
			V_{CC} = 2.5 V	19	
			V_{CC} = 3.3 V	19	
			V_{CC} = 5 V	21	

Copyright © 2001–2015, Texas Instruments Incorporated

chanhvinh.com

6.8 Typical Characteristics

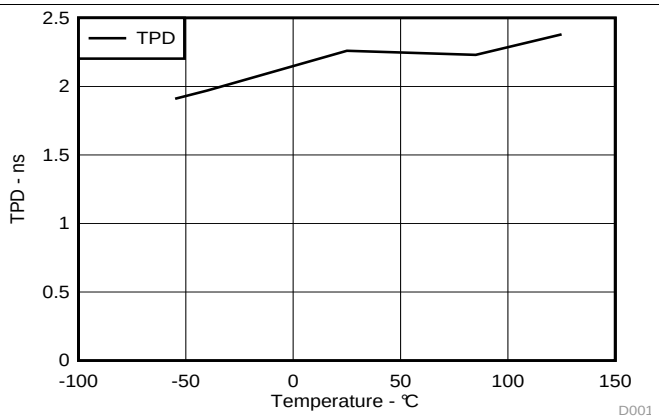

Figure 1. TPD Across Temperature at 3.3-V V_{CC}

Copyright © 2001–2015, Texas Instruments Incorporated

chanhvinh.com

7 Parameter Measurement Information

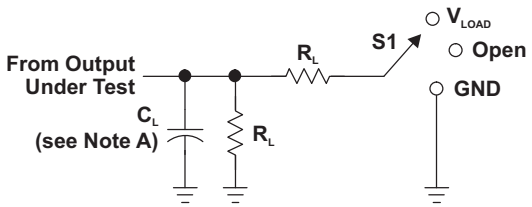

LOAD CIRCUIT

TEST	S1
t_{PLH}/t_{PHL}	Open
t_{PLZ}/t_{PZL}	V_{LOAD}
t_{PHZ}/t_{PZH}	GND

V_{CC}	INPUTS		V_M	V_{LOAD}	C_L	R_L	V_Δ
	V_I	t_r/t_f					
1.8 V ± 0.15 V	V_{CC}	≤2 ns	$V_{CC}/2$	2 × V_{CC}	30 pF	1 kΩ	0.15 V
2.5 V ± 0.2 V	V_{CC}	≤2 ns	$V_{CC}/2$	2 × V_{CC}	30 pF	500 Ω	0.15 V
3.3 V ± 0.3 V	3 V	≤2.5 ns	1.5 V	6 V	50 pF	500 Ω	0.3 V
5 V ± 0.5 V	V_{CC}	≤2.5 ns	$V_{CC}/2$	2 × V_{CC}	50 pF	500 Ω	0.3 V

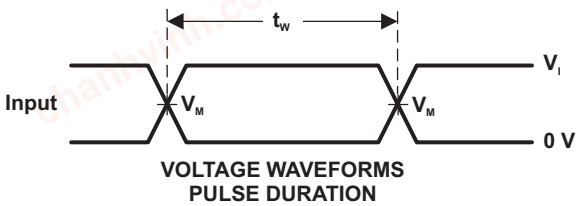

VOLTAGE WAVEFORMS
PULSE DURATION

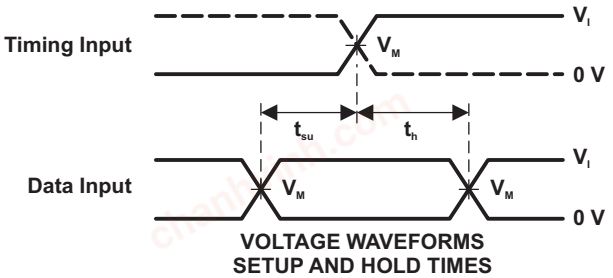

VOLTAGE WAVEFORMS
SETUP AND HOLD TIMES

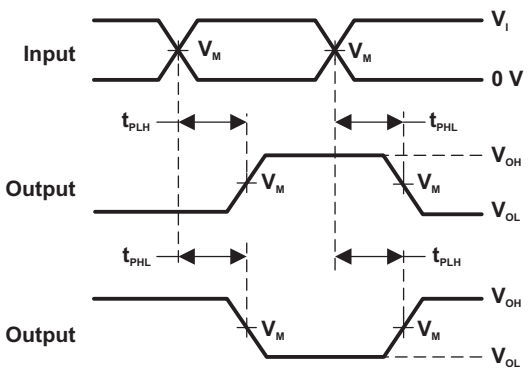

VOLTAGE WAVEFORMS
PROPAGATION DELAY TIMES
INVERTING AND NONINVERTING OUTPUTS

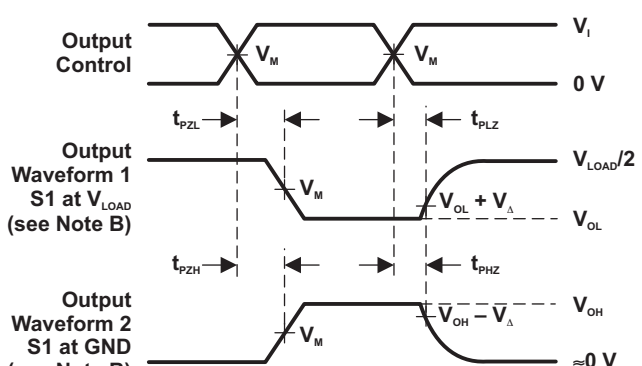

VOLTAGE WAVEFORMS
ENABLE AND DISABLE TIMES
LOW- AND HIGH-LEVEL ENABLING

NOTES: A. C_L includes probe and jig capacitance.
B. Waveform 1 is for an output with internal conditions such that the output is low, except when disabled by the output control. Waveform 2 is for an output with internal conditions such that the output is high, except when disabled by the output control.
C. All input pulses are supplied by generators having the following characteristics: PRR ≤ 10 MHz, Z_O = 50 Ω.
D. The outputs are measured one at a time, with one transition per measurement.
E. t_{PLZ} and t_{PHZ} are the same as t_{dis}.
F. t_{PZL} and t_{PZH} are the same as t_{en}.
G. t_{PLH} and t_{PHL} are the same as t_{pd}.
H. All parameters and waveforms are not applicable to all devices.

Figure 2. Load Circuit and Voltage Waveforms

Copyright © 2001–2015, Texas Instruments Incorporated

chanhvinh.com

8 Detailed Description

8.1 Overview

The SN74LVC3G34 device contains three buffer gates that each perform the Boolean function Y = A. This device is fully specified for partial-power-down applications using I_{off}. The I_{off} circuitry disables the outputs, preventing damaging current backflow through the device when it is powered down.

8.2 Functional Block Diagram

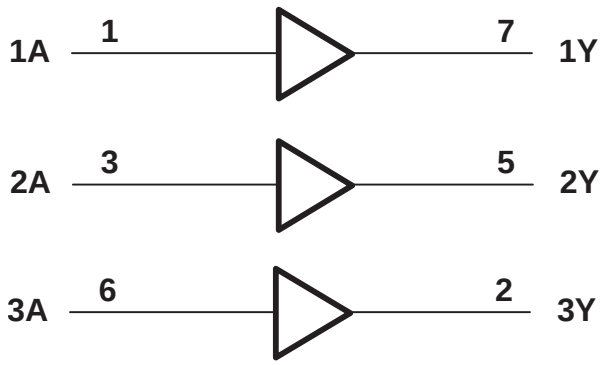

8.3 Feature Description

The SN74LVC3G34 device has a wider operating voltage range, operating from 1.65 V to 5.5 V, and allows down voltage translation. The SN74LVC3G34 I_{off} feature allows voltages on the inputs and outputs when V_{CC} is 0 V.

8.4 Device Functional Modes

Table 1 lists the functional modes of the SN74LVC3G34.

Table 1. Function Table

INPUT A	OUTPUT Y
H	H
L	L

Copyright © 2001–2015, Texas Instruments Incorporated

chanhvinh.com

9 Application and Implementation

9.1 Application Information

The SN74LVC3G34 is a high-drive CMOS device that can be used as a buffer with a high output drive, such as an LED application. It can produce 24 mA of drive current at 3.3 V, making it ideal for driving multiple outputs and good for high-speed applications up to 100 MHz. The inputs are 5.5-V tolerant, allowing it to translate down to V_{CC}.

9.2 Typical Application

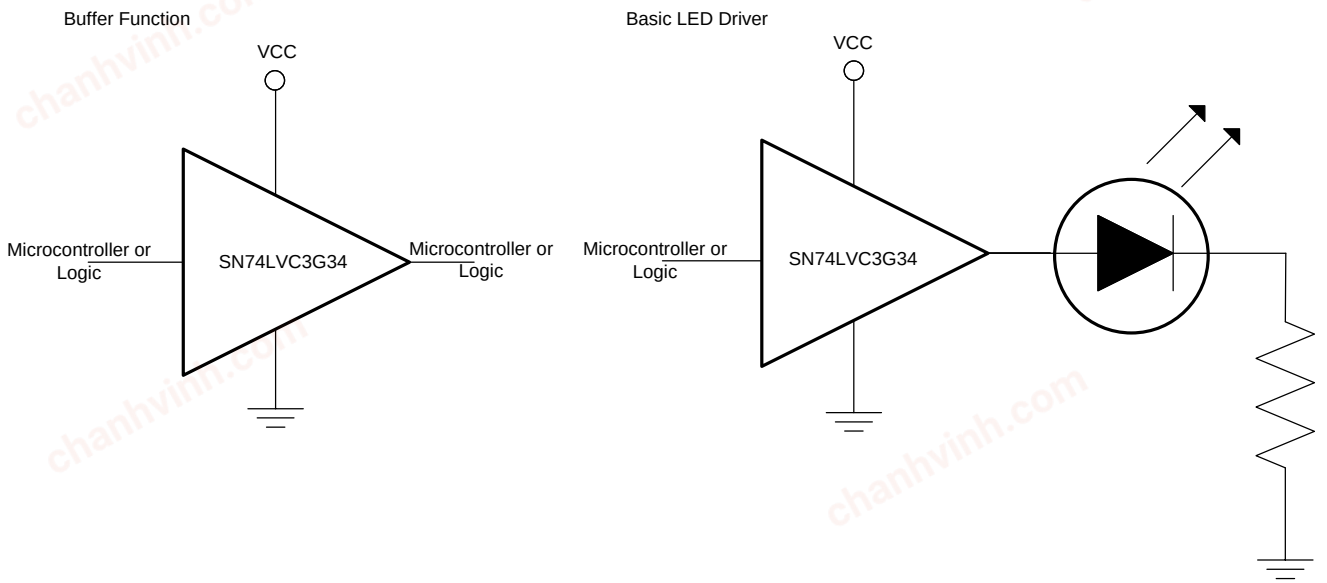

9.2.1 Design Requirements

This device uses CMOS technology and has balanced output drive. Take care to avoid bus contention because it can drive currents that would exceed maximum limits. The high drive will also create fast edges into light loads so routing and load conditions must be considered to prevent ringing.

9.2.2 Detailed Design Procedure

1. Recommended Input Conditions
   - Rise time and fall time specs. See (Δt/ΔV) in the *Recommended Operating Conditions* table.
   - Specified high and low levels. See (V_{IH} and V_{IL}) in the *Recommended Operating Conditions* table.
   - Inputs are overvoltage tolerant allowing them to go as high as (VI max) in the *Recommended Operating Conditions* table at any valid V_{CC}.
2. Recommended Output Conditions
   - Load currents must not exceed (I_O max) per output and must not exceed (Continuous current through V_{CC} or GND) total current for the part. These limits are located in the *Recommended Operating Conditions* table.
   - Outputs must not be pulled above V_{CC} under normal operating conditions.

Copyright © 2001–2015, Texas Instruments Incorporated

chanhvinh.com

Typical Application (continued)

9.2.3 Application Curve

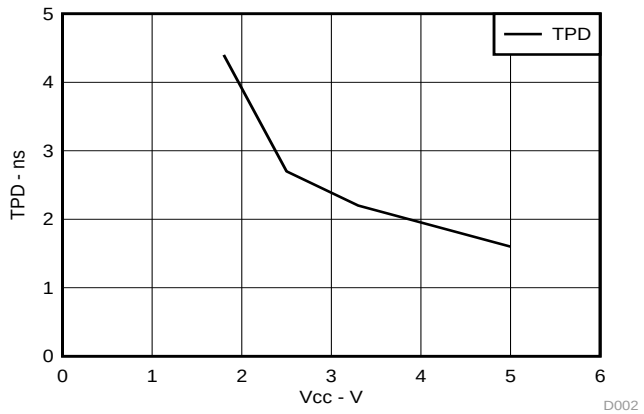

Figure 3. TPD Across V_{CC} at 25°C

10 Power Supply Recommendations

The power supply can be any voltage between the minimum and maximum supply voltage rating located in the *Recommended Operating Conditions* table.

Each V_{CC} pin must have a good bypass capacitor to prevent power disturbance. For devices with a single supply, a 0.1-µF capacitor is recommended and if there are multiple V_{CC} pins then a 0.01-µF or 0.022-µF capacitor is recommended for each power pin. It is ok to parallel multiple bypass caps to reject different frequencies of noise. 0.1-µF and 1-µF capacitors are commonly used in parallel. The bypass capacitor must be installed as close to the power pin as possible for best results.

11 Layout

11.1 Layout Guidelines

When using multiple bit logic devices inputs must not ever float. In many cases, functions or parts of functions of digital logic devices are unused; for example, when only two inputs of a triple-input AND gate are used or only 3 of the 4 buffer gates are used. Such input pins must not be left unconnected because the undefined voltages at the outside connections result in undefined operational states. Specified below are the rules that must be observed under all circumstances. All unused inputs of digital logic devices must be connected to a high or low bias to prevent them from floating. The logic level that must be applied to any particular unused input depends on the function of the device. Generally they will be tied to GND or V_{CC} whichever make more sense or is more convenient.

11.2 Layout Example

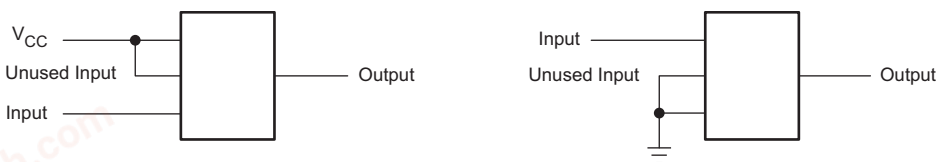

Copyright © 2001–2015, Texas Instruments Incorporated

chanhvinh.com

12 Device and Documentation Support

12.1 Documentation Support

12.1.1 Documentation Support

For related documentation, see the following:

Implications of Slow or Floating CMOS Inputs, SCBA004

12.2 Community Resources

The following links connect to TI community resources. Linked contents are provided "AS IS" by the respective contributors. They do not constitute TI specifications and do not necessarily reflect TI's views; see TI's Terms of Use.

TI E2E™ Online Community ***TI's Engineer-to-Engineer (E2E) Community.*** Created to foster collaboration among engineers. At e2e.ti.com, you can ask questions, share knowledge, explore ideas and help solve problems with fellow engineers.

Design Support ***TI's Design Support*** Quickly find helpful E2E forums along with design support tools and contact information for technical support.

12.3 Trademarks

NanoFree, E2E are trademarks of Texas Instruments.
All other trademarks are the property of their respective owners.

12.4 Electrostatic Discharge Caution



These devices have limited built-in ESD protection. The leads should be shorted together or the device placed in conductive foam during storage or handling to prevent electrostatic damage to the MOS gates.

12.5 Glossary

SLYZ022 — *TI Glossary*.

This glossary lists and explains terms, acronyms, and definitions.

13 Mechanical, Packaging, and Orderable Information

The following pages include mechanical packaging and orderable information. This information is the most current data available for the designated devices. This data is subject to change without notice and revision of this document. For browser based versions of this data sheet, refer to the left hand navigation.

Copyright © 2001–2015, Texas Instruments Incorporated

chanhvinh.com

PACKAGING INFORMATION

Orderable part number	Status (1)	Material type (2)	Package | Pins	Package qty | Carrier	RoHS (3)	Lead finish/ Ball material (4)	MSL rating/ Peak reflow (5)	Op temp (°C)	Part marking (6)
SN74LVC3G34DCTR	Active	Production	SSOP (DCT) | 8	3000 | LARGE T&R	Yes	NIPDAU | SN	Level-1-260C-UNLIM	-40 to 125	(2X35, C34) (R, Z)
SN74LVC3G34DCTR.B	Active	Production	SSOP (DCT) | 8	3000 | LARGE T&R	Yes	SN	Level-1-260C-UNLIM	-40 to 125	(2X35, C34) (R, Z)
SN74LVC3G34DCTRG4	Active	Production	SSOP (DCT) | 8	3000 | LARGE T&R	Yes	NIPDAU	Level-1-260C-UNLIM	-40 to 125	C34 (R, Z)
SN74LVC3G34DCTRG4.B	Active	Production	SSOP (DCT) | 8	3000 | LARGE T&R	Yes	NIPDAU	Level-1-260C-UNLIM	-40 to 125	C34 (R, Z)
SN74LVC3G34DCUR	Active	Production	VSSOP (DCU) | 8	3000 | LARGE T&R	Yes	NIPDAU | SN	Level-1-260C-UNLIM	-40 to 125	(34, C34J, C34Q, C 34R) (CR, CZ)
SN74LVC3G34DCUR.B	Active	Production	VSSOP (DCU) | 8	3000 | LARGE T&R	Yes	SN	Level-1-260C-UNLIM	-40 to 125	(34, C34J, C34Q, C 34R) (CR, CZ)
SN74LVC3G34DCURG4	Active	Production	VSSOP (DCU) | 8	3000 | LARGE T&R	Yes	NIPDAU	Level-1-260C-UNLIM	-40 to 125	C34R
SN74LVC3G34DCURG4.B	Active	Production	VSSOP (DCU) | 8	3000 | LARGE T&R	Yes	NIPDAU	Level-1-260C-UNLIM	-40 to 125	C34R
SN74LVC3G34DCUT	Active	Production	VSSOP (DCU) | 8	250 | SMALL T&R	Yes	NIPDAU | SN	Level-1-260C-UNLIM	-40 to 125	(C34J, C34Q, C34R) CR
SN74LVC3G34DCUT.B	Active	Production	VSSOP (DCU) | 8	250 | SMALL T&R	Yes	SN	Level-1-260C-UNLIM	-40 to 125	(C34J, C34Q, C34R) CR
SN74LVC3G34DCUTG4	Active	Production	VSSOP (DCU) | 8	250 | SMALL T&R	Yes	NIPDAU	Level-1-260C-UNLIM	-40 to 125	C34R
SN74LVC3G34DCUTG4.B	Active	Production	VSSOP (DCU) | 8	250 | SMALL T&R	Yes	NIPDAU	Level-1-260C-UNLIM	-40 to 125	C34R
SN74LVC3G34YZPR	Active	Production	DSBGA (YZP) | 8	3000 | LARGE T&R	Yes	SNAGCU	Level-1-260C-UNLIM	-40 to 85	C9N
SN74LVC3G34YZPR.B	Active	Production	DSBGA (YZP) | 8	3000 | LARGE T&R	Yes	SNAGCU	Level-1-260C-UNLIM	-40 to 85	C9N

(1) **Status:** For more details on status, see our product life cycle.

(2) **Material type:** When designated, preproduction parts are prototypes/experimental devices, and are not yet approved or released for full production. Testing and final process, including without limitation quality assurance, reliability performance testing, and/or process qualification, may not yet be complete, and this item is subject to further changes or possible discontinuation. If available for ordering, purchases will be subject to an additional waiver at checkout, and are intended for early internal evaluation purposes only. These items are sold without warranties of any kind.

chanhvinh.com

(3) RoHS values: Yes, No, RoHS Exempt. See the TI RoHS Statement for additional information and value definition.

(4) Lead finish/Ball material: Parts may have multiple material finish options. Finish options are separated by a vertical ruled line. Lead finish/Ball material values may wrap to two lines if the finish value exceeds the maximum column width.

(5) MSL rating/Peak reflow: The moisture sensitivity level ratings and peak solder (reflow) temperatures. In the event that a part has multiple moisture sensitivity ratings, only the lowest level per JEDEC standards is shown. Refer to the shipping label for the actual reflow temperature that will be used to mount the part to the printed circuit board.

(6) Part marking: There may be an additional marking, which relates to the logo, the lot trace code information, or the environmental category of the part.

Multiple part markings will be inside parentheses. Only one part marking contained in parentheses and separated by a "~" will appear on a part. If a line is indented then it is a continuation of the previous line and the two combined represent the entire part marking for that device.

Important Information and Disclaimer: The information provided on this page represents TI's knowledge and belief as of the date that it is provided. TI bases its knowledge and belief on information provided by third parties, and makes no representation or warranty as to the accuracy of such information. Efforts are underway to better integrate information from third parties. TI has taken and continues to take reasonable steps to provide representative and accurate information but may not have conducted destructive testing or chemical analysis on incoming materials and chemicals. TI and TI suppliers consider certain information to be proprietary, and thus CAS numbers and other limited information may not be available for release.

In no event shall TI's liability arising out of such information exceed the total purchase price of the TI part(s) at issue in this document sold by TI to Customer on an annual basis.

chanhvinh.com

PACKAGE MATERIALS INFORMATION

TAPE AND REEL INFORMATION

REEL DIMENSIONS

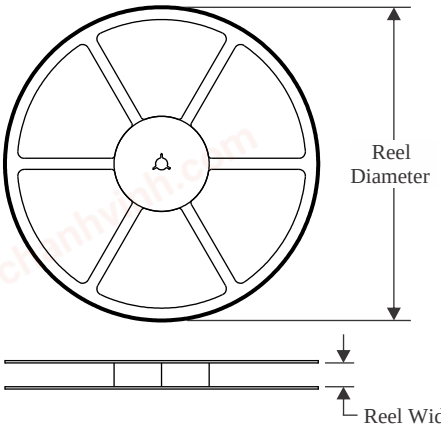

TAPE DIMENSIONS

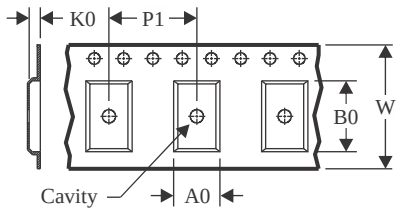

A0	Dimension designed to accommodate the component width
B0	Dimension designed to accommodate the component length
K0	Dimension designed to accommodate the component thickness
W	Overall width of the carrier tape
P1	Pitch between successive cavity centers

QUADRANT ASSIGNMENTS FOR PIN 1 ORIENTATION IN TAPE

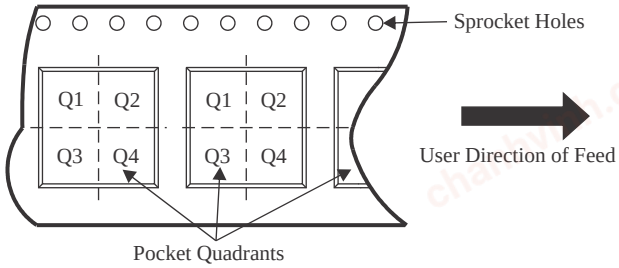

*All dimensions are nominal

Device	Package Type	Package Drawing	Pins	SPQ	Reel Diameter (mm)	Reel Width W1 (mm)	A0 (mm)	B0 (mm)	K0 (mm)	P1 (mm)	W (mm)	Pin1 Quadrant
SN74LVC3G34DCTR	SSOP	DCT	8	3000	180.0	12.4	3.15	4.35	1.55	4.0	12.0	Q3
SN74LVC3G34DCTR	SSOP	DCT	8	3000	177.8	12.4	3.45	4.4	1.45	4.0	12.0	Q3
SN74LVC3G34DCTRG4	SSOP	DCT	8	3000	177.8	12.4	3.45	4.4	1.45	4.0	12.0	Q3
SN74LVC3G34DCUR	VSSOP	DCU	8	3000	178.0	9.0	2.25	3.35	1.05	4.0	8.0	Q3
SN74LVC3G34DCUR	VSSOP	DCU	8	3000	180.0	8.4	2.25	3.35	1.05	4.0	8.0	Q3
SN74LVC3G34DCURG4	VSSOP	DCU	8	3000	180.0	8.4	2.25	3.35	1.05	4.0	8.0	Q3
SN74LVC3G34DCUT	VSSOP	DCU	8	250	178.0	9.0	2.25	3.35	1.05	4.0	8.0	Q3
SN74LVC3G34DCUT	VSSOP	DCU	8	250	178.0	9.5	2.25	3.35	1.05	4.0	8.0	Q3
SN74LVC3G34DCUTG4	VSSOP	DCU	8	250	180.0	8.4	2.25	3.35	1.05	4.0	8.0	Q3
SN74LVC3G34YZPR	DSBGA	YZP	8	3000	178.0	9.2	1.02	2.02	0.63	4.0	8.0	Q1

chanhvinh.com

PACKAGE MATERIALS INFORMATION

TAPE AND REEL BOX DIMENSIONS

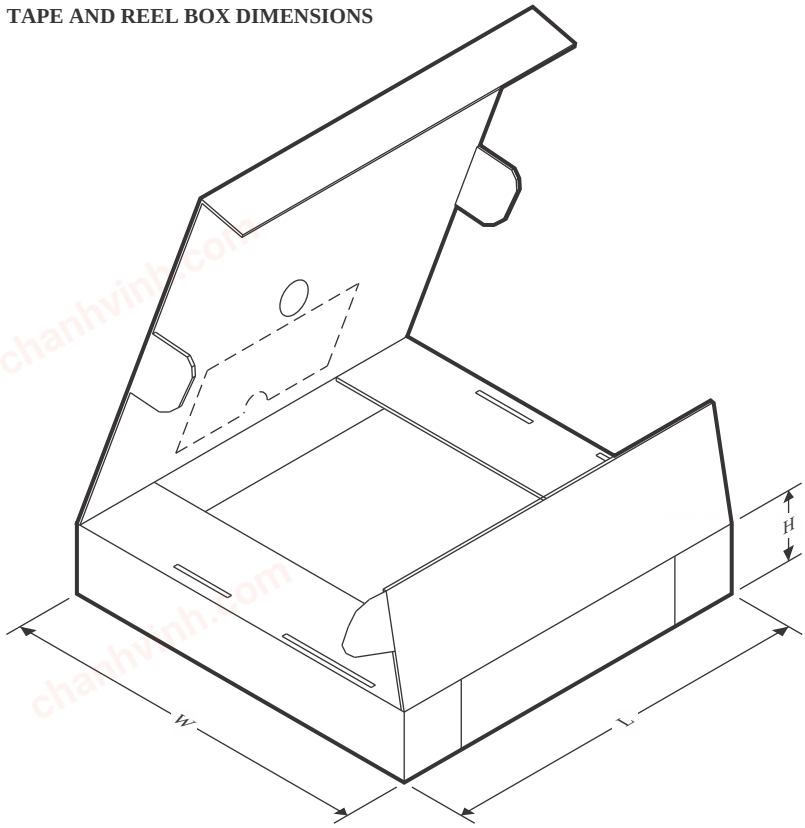

*All dimensions are nominal

Device	Package Type	Package Drawing	Pins	SPQ	Length (mm)	Width (mm)	Height (mm)
SN74LVC3G34DCTR	SSOP	DCT	8	3000	190.0	190.0	30.0
SN74LVC3G34DCTR	SSOP	DCT	8	3000	183.0	183.0	20.0
SN74LVC3G34DCTRG4	SSOP	DCT	8	3000	183.0	183.0	20.0
SN74LVC3G34DCUR	VSSOP	DCU	8	3000	180.0	180.0	18.0
SN74LVC3G34DCUR	VSSOP	DCU	8	3000	202.0	201.0	28.0
SN74LVC3G34DCURG4	VSSOP	DCU	8	3000	202.0	201.0	28.0
SN74LVC3G34DCUT	VSSOP	DCU	8	250	180.0	180.0	18.0
SN74LVC3G34DCUT	VSSOP	DCU	8	250	202.0	201.0	28.0
SN74LVC3G34DCUTG4	VSSOP	DCU	8	250	202.0	201.0	28.0
SN74LVC3G34YZPR	DSBGA	YZP	8	3000	220.0	220.0	35.0

chanhvinh.com

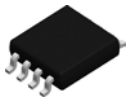

PACKAGE OUTLINE

DCT0008A

SSOP - 1.3 mm max height

SMALL OUTLINE PACKAGE

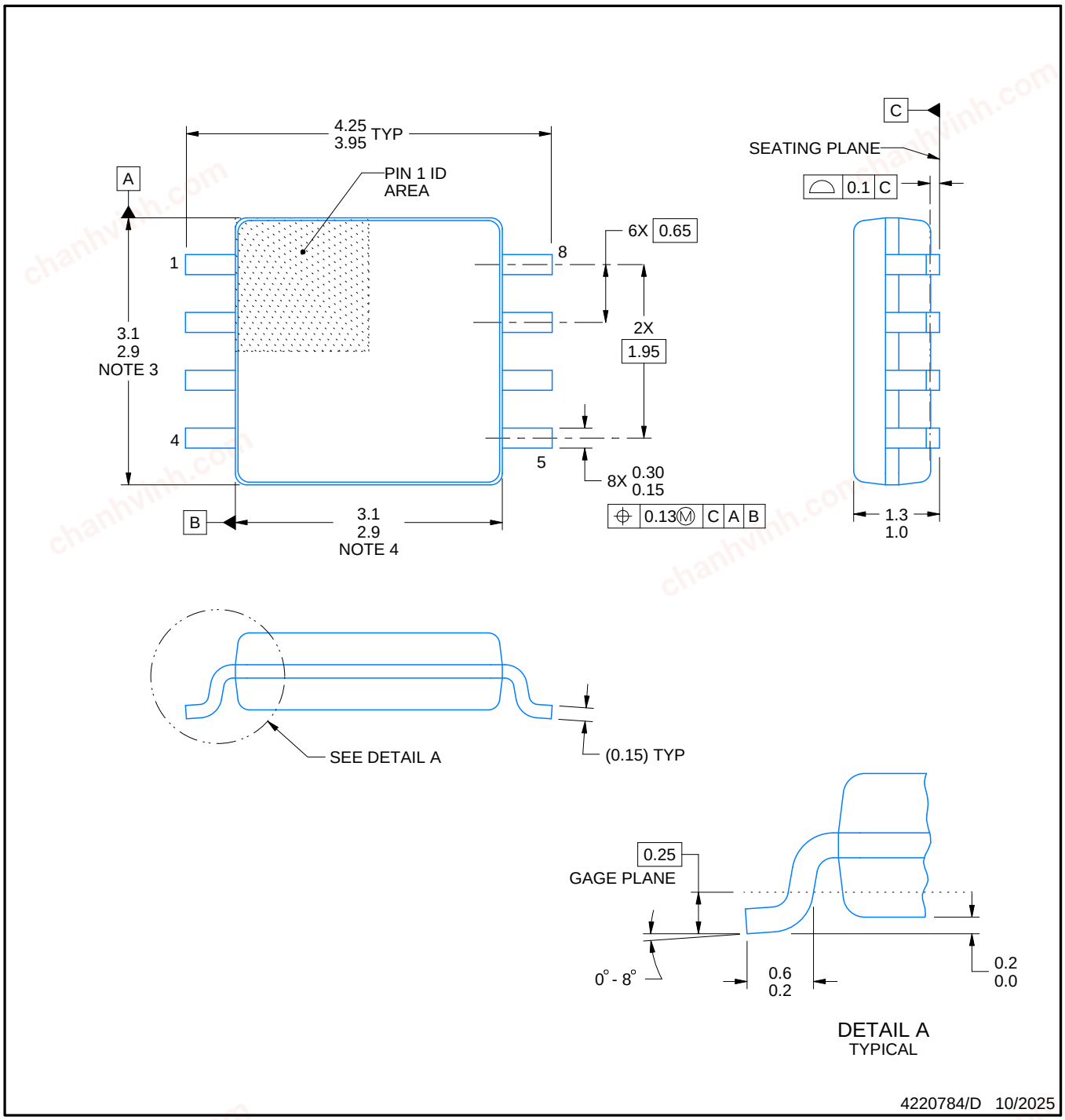

NOTES:

1. All linear dimensions are in millimeters. Dimensions in parenthesis are for reference only. Dimensioning and tolerancing per ASME Y14.5M.
2. This drawing is subject to change without notice.
3. This dimension does not include mold flash, protrusions, or gate burrs. Mold flash, protrusions, or gate burrs shall not exceed 0.15 mm per side.
4. This dimension does not include interlead flash. Interlead flash shall not exceed 0.25 mm per side.

chanhvinh.com

EXAMPLE BOARD LAYOUT

DCT0008A

SSOP - 1.3 mm max height

SMALL OUTLINE PACKAGE

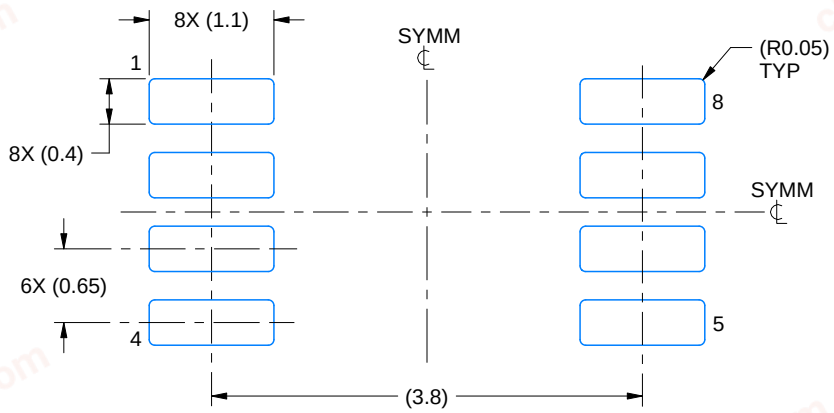

LAND PATTERN EXAMPLE
EXPOSED METAL SHOWN
SCALE:15X

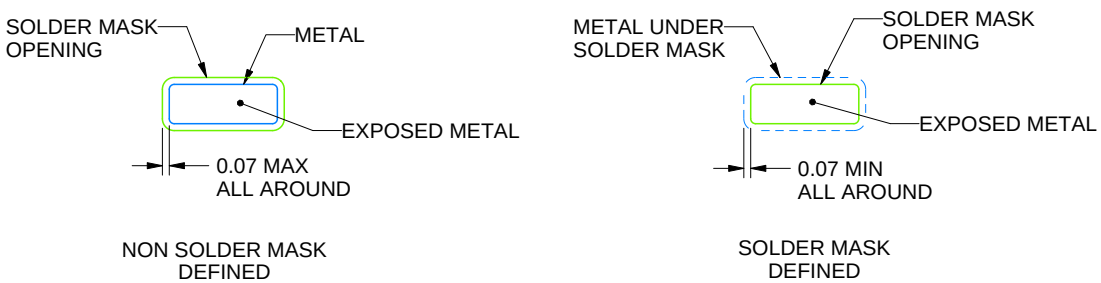

SOLDER MASK DETAILS

4220784/D 10/2025

NOTES: (continued)

5. Publication IPC-7351 may have alternate designs.
6. Solder mask tolerances between and around signal pads can vary based on board fabrication site.

chanhvinh.com

EXAMPLE STENCIL DESIGN

DCT0008A

SSOP - 1.3 mm max height

SMALL OUTLINE PACKAGE

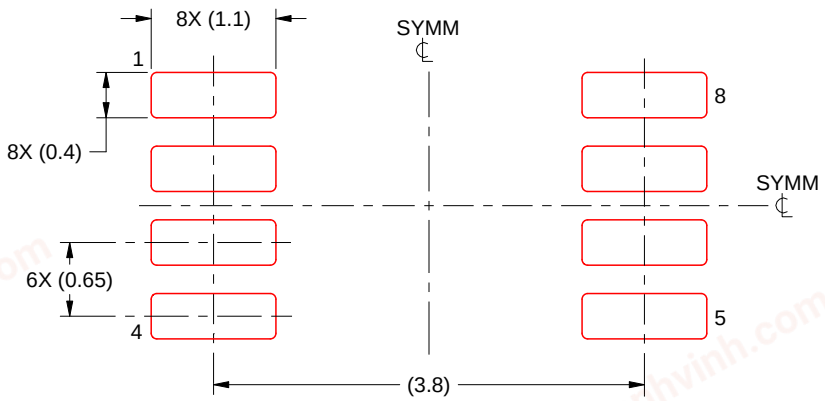

SOLDER PASTE EXAMPLE
BASED ON 0.125 mm THICK STENCIL
SCALE:15X

4220784/D 10/2025

NOTES: (continued)

7. Laser cutting apertures with trapezoidal walls and rounded corners may offer better paste release. IPC-7525 may have alternate design recommendations.
8. Board assembly site may have different recommendations for stencil design.

chanhvinh.com

PACKAGE OUTLINE

DCU0008A



VSSOP - 0.9 mm max height

SMALL OUTLINE PACKAGE

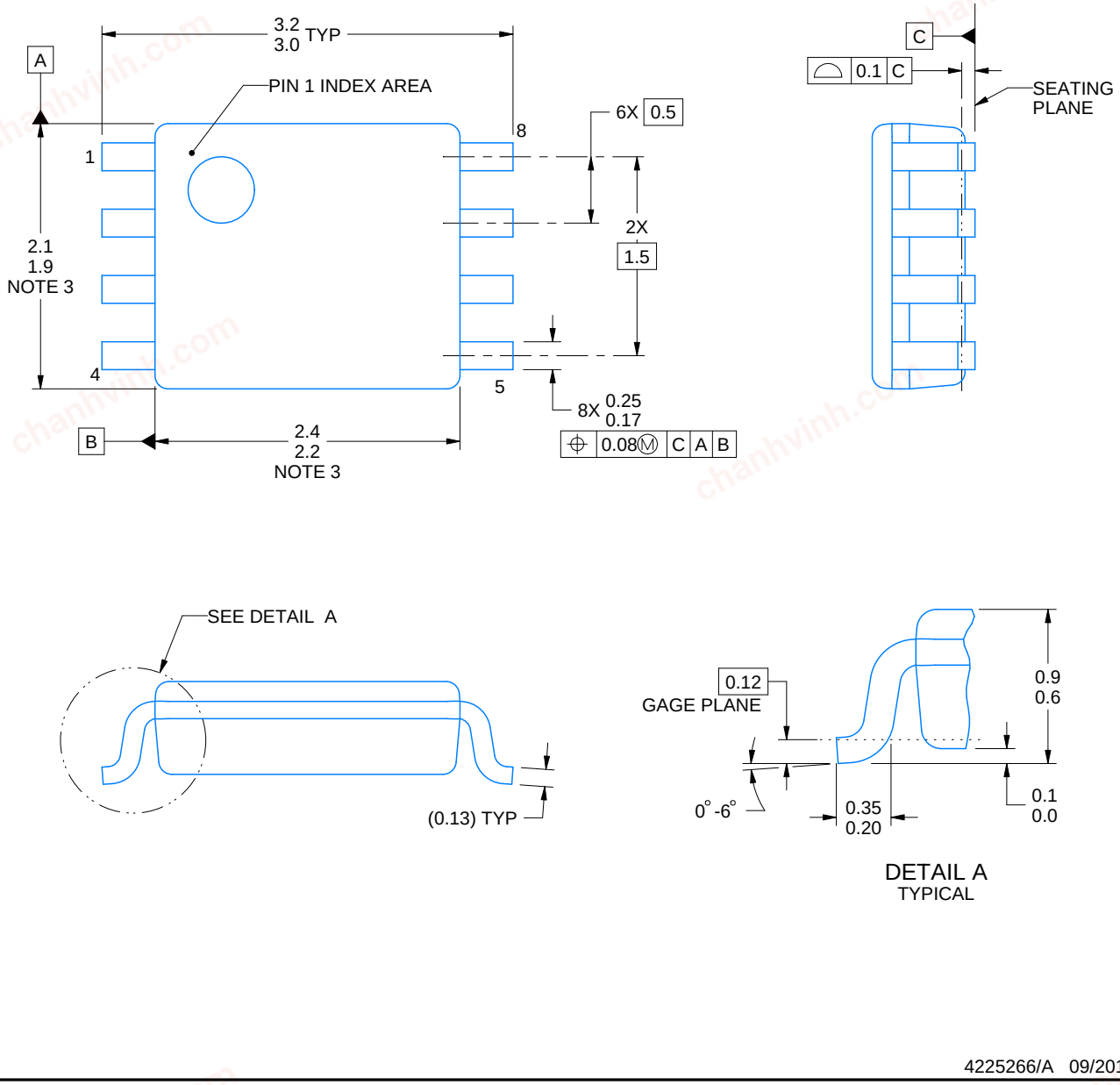

NOTES:

1. All linear dimensions are in millimeters. Any dimensions in parenthesis are for reference only. Dimensioning and tolerancing per ASME Y14.5M.
2. This drawing is subject to change without notice.
3. This dimension does not include mold flash, protrusions, or gate burrs. Mold flash, protrusions, or gate burrs shall not exceed 0.15 mm per side.
4. Reference JEDEC registration MO-187 variation CA.

chanhvinh.com

EXAMPLE BOARD LAYOUT

DCU0008A

VSSOP - 0.9 mm max height

SMALL OUTLINE PACKAGE

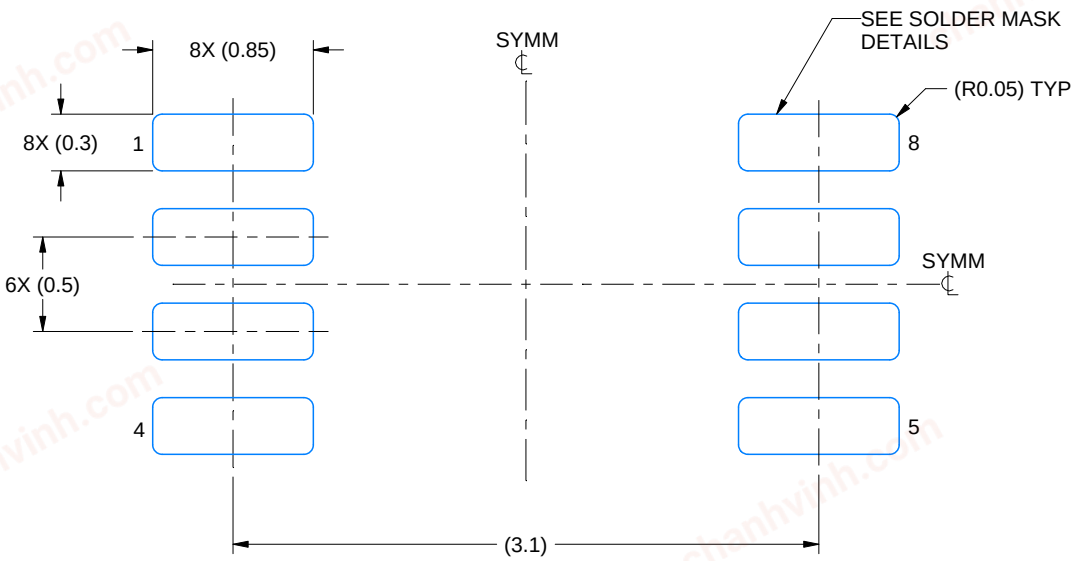

LAND PATTERN EXAMPLE
EXPOSED METAL SHOWN
SCALE: 25X

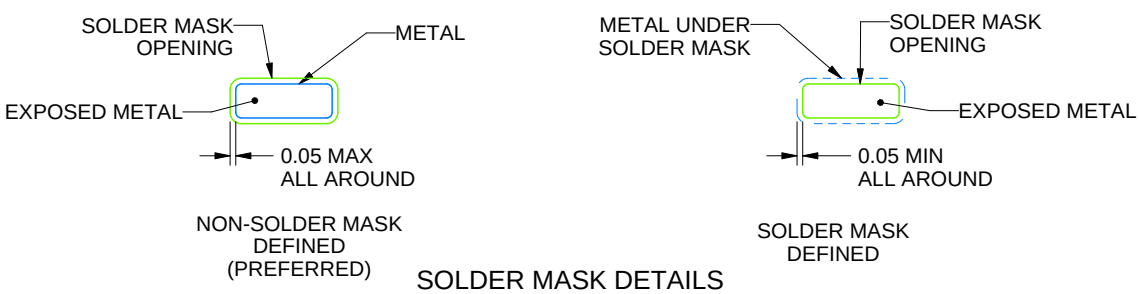

SOLDER MASK DETAILS

4225266/A 09/2014

NOTES: (continued)

5. Publication IPC-7351 may have alternate designs.
6. Solder mask tolerances between and around signal pads can vary based on board fabrication site.

chanhvinh.com

EXAMPLE STENCIL DESIGN

DCU0008A

VSSOP - 0.9 mm max height

SMALL OUTLINE PACKAGE

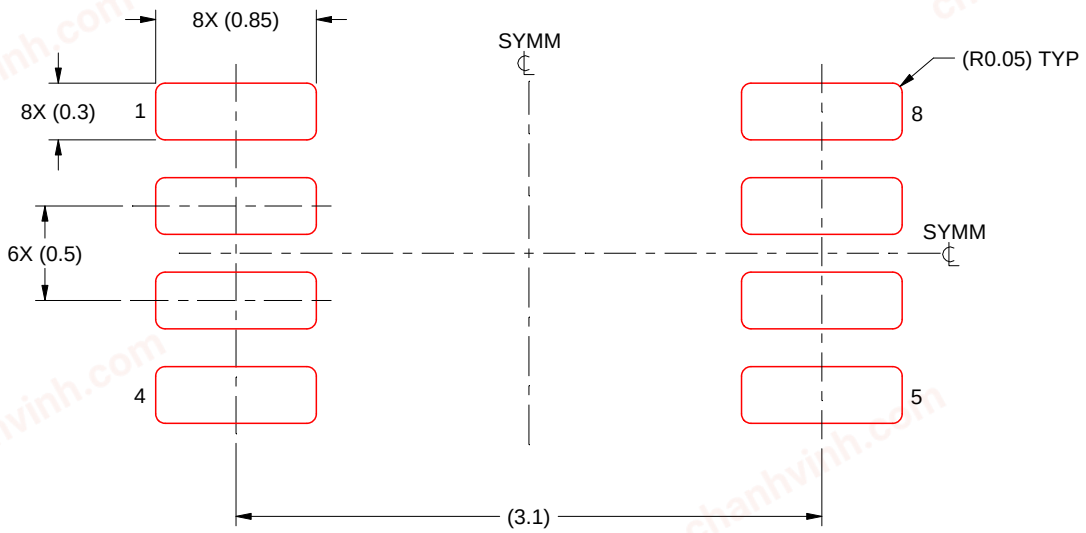

SOLDER PASTE EXAMPLE
BASED ON 0.125 mm THICK STENCIL
SCALE: 25X

4225266/A 09/2014

NOTES: (continued)

7. Laser cutting apertures with trapezoidal walls and rounded corners may offer better paste release. IPC-7525 may have alternate design recommendations.
8. Board assembly site may have different recommendations for stencil design.

chanhvinh.com

PACKAGE OUTLINE

YZP0008

DSBGA - 0.5 mm max height

DIE SIZE BALL GRID ARRAY

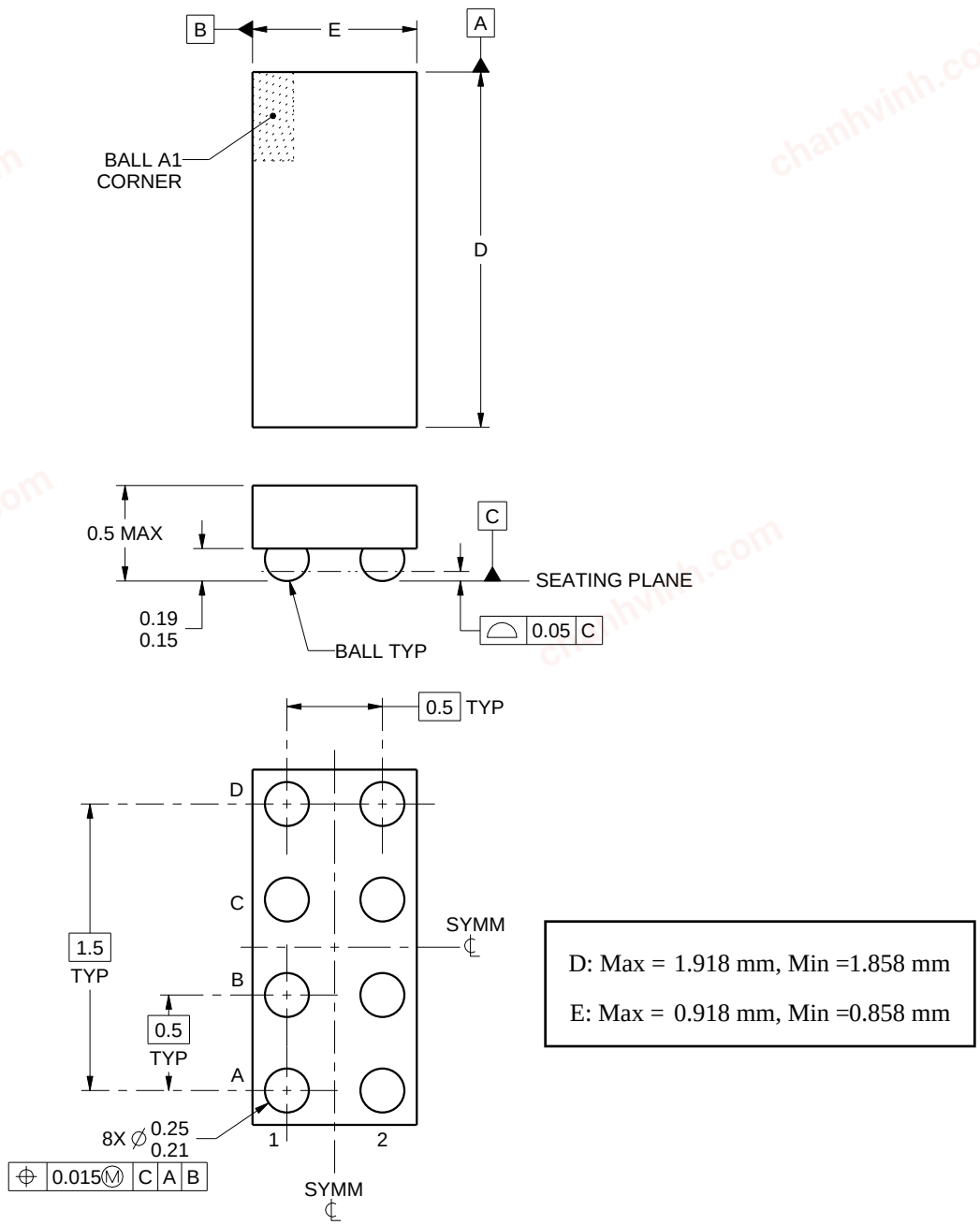

D: Max = 1.918 mm, Min =1.858 mm

E: Max = 0.918 mm, Min =0.858 mm

4223082/A 07/2016

NOTES:

1. All linear dimensions are in millimeters. Any dimensions in parenthesis are for reference only. Dimensioning and tolerancing per ASME Y14.5M.
2. This drawing is subject to change without notice.

chanhvinh.com

EXAMPLE BOARD LAYOUT

YZP0008

DSBGA - 0.5 mm max height

DIE SIZE BALL GRID ARRAY

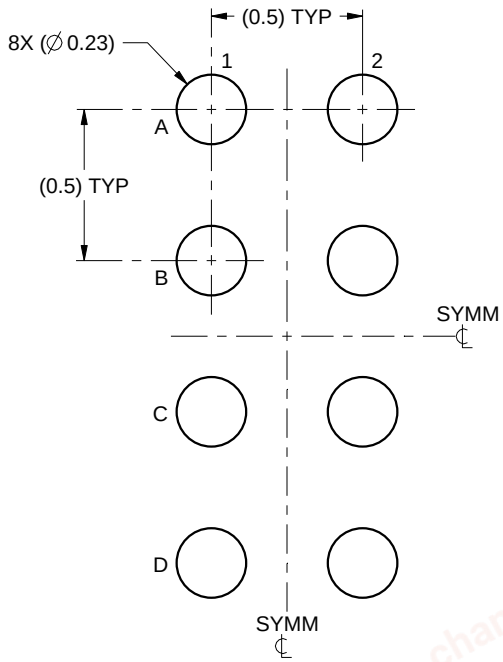

LAND PATTERN EXAMPLE
SCALE:40X

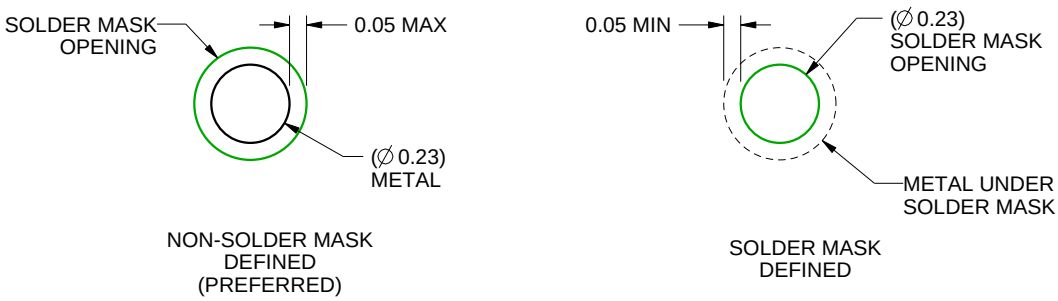

SOLDER MASK DETAILS
NOT TO SCALE

4223082/A 07/2016

NOTES: (continued)

3. Final dimensions may vary due to manufacturing tolerance considerations and also routing constraints. For more information, see Texas Instruments literature number SNVA009 (www.ti.com/lit/snva009).

chanhvinh.com

EXAMPLE STENCIL DESIGN

YZP0008

DSBGA - 0.5 mm max height

DIE SIZE BALL GRID ARRAY

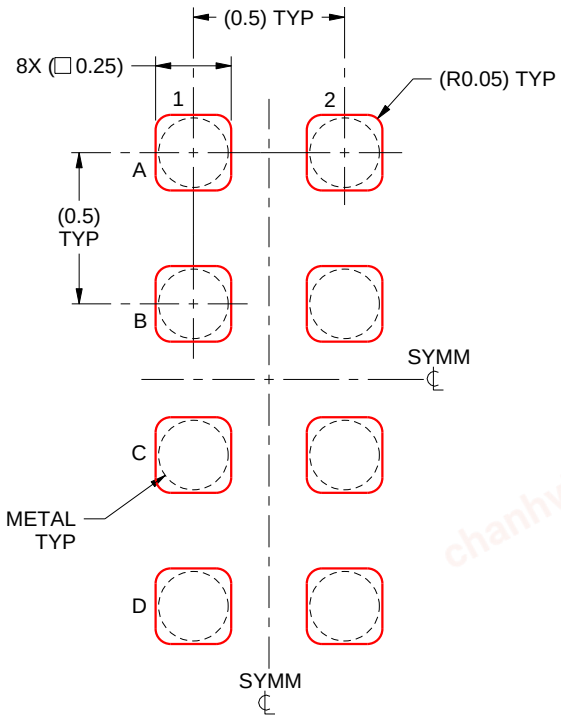

SOLDER PASTE EXAMPLE
BASED ON 0.1 mm THICK STENCIL
SCALE:40X

4223082/A 07/2016

NOTES: (continued)

4. Laser cutting apertures with trapezoidal walls and rounded corners may offer better paste release.

chanhvinh.com

IMPORTANT NOTICE AND DISCLAIMER

TI PROVIDES TECHNICAL AND RELIABILITY DATA (INCLUDING DATASHEETS), DESIGN RESOURCES (INCLUDING REFERENCE DESIGNS), APPLICATION OR OTHER DESIGN ADVICE, WEB TOOLS, SAFETY INFORMATION, AND OTHER RESOURCES “AS IS” AND WITH ALL FAULTS, AND DISCLAIMS ALL WARRANTIES, EXPRESS AND IMPLIED, INCLUDING WITHOUT LIMITATION ANY IMPLIED WARRANTIES OF MERCHANTABILITY, FITNESS FOR A PARTICULAR PURPOSE OR NON-INFRINGEMENT OF THIRD PARTY INTELLECTUAL PROPERTY RIGHTS.

These resources are intended for skilled developers designing with TI products. You are solely responsible for (1) selecting the appropriate TI products for your application, (2) designing, validating and testing your application, and (3) ensuring your application meets applicable standards, and any other safety, security, regulatory or other requirements.

These resources are subject to change without notice. TI grants you permission to use these resources only for development of an application that uses the TI products described in the resource. Other reproduction and display of these resources is prohibited. No license is granted to any other TI intellectual property right or to any third party intellectual property right. TI disclaims responsibility for, and you fully indemnify TI and its representatives against any claims, damages, costs, losses, and liabilities arising out of your use of these resources.

TI’s products are provided subject to TI’s Terms of Sale, TI’s General Quality Guidelines, or other applicable terms available either on ti.com or provided in conjunction with such TI products. TI’s provision of these resources does not expand or otherwise alter TI’s applicable warranties or warranty disclaimers for TI products. Unless TI explicitly designates a product as custom or customer-specified, TI products are standard, catalog, general purpose devices.

TI objects to and rejects any additional or different terms you may propose.

Copyright © 2026, Texas Instruments Incorporated

Last updated 10/2025