chanhvinh.com

SN74LVC2G07 Dual Buffer and Driver With Open-Drain Outputs

1 Features

- Dual Open-Drain Buffer Configuration
- -24-mA Output Drive at 3.3 V
- Support Translation-Up and Down
- Available in the Texas Instruments NanoFree™ Package
- Supports 5-V V_{CC} Operation
- Inputs and Open-Drain Outputs Accept Voltages Up to 5.5 V
- Max t_{pd} of 3.7 ns at 3.3 V
- Low Power Consumption, 10-µA Max I_{CC}
- Typical V_{OLP} (Output Ground Bounce) <0.8 V at V_{CC} = 3.3 V, T_A = 25°C
- Typical V_{OHV} (Output V_{OH} Undershoot) >2 V at V_{CC} = 3.3 V, T_A = 25°C
- I_{off} Supports Live Insertion, Partial-Power-Down Mode, and Back-Drive Protection
- Latch-Up Performance Exceeds 100 mA Per JESD 78, Class II
- ESD Protection Exceeds JESD 22
  - 2000-V Human-Body Model (A114-A)
  - 200-V Machine Model (A115-A)
  - 1000-V Charged-Device Model (C101)

2 Applications

- Blu-ray Players and Home Theaters
- DVD Recorders and Players
- Desktops or Notebook PCs
- Digital Video Cameras (DVC)
- Embedded PCs
- GPS: Personal Navigation Devices
- Mobile Phones
- Network Projector Front Ends
- Portable Media Players
- Solid State Drive (SSD): Enterprise
- High-Definition (HDTV)
- Tablet: Enterprise
- Audio Dock: Portable
- DLP Front Projection System

3 Description

This dual buffer and driver is designed for 1.65-V to 5.5-V V_{CC} operation. The output of the SN74LVC2G07 device is open drain and can be connected to other open-drain outputs to implement active-low wired-OR or active-high wired-AND functions. The maximum sink current is 32 mA.

NanoFree package technology is a major breakthrough in IC packaging concepts, using the die as the package.

This device is fully specified for partial-power-down applications using I_{off}. The I_{off} circuitry disables the outputs, preventing damaging current backflow through the device when it is powered down.

Device Information(1)

PART NUMBER	PACKAGE	BODY SIZE (NOM)
SN74LVC2G07	SOT-23 (6)	2.90 mm × 1.60 mm
	SC70 (6)	2.00 mm × 1.25 mm
	DRY SON (6)	1.45 mm × 1.00 mm
	DSF SON (6)	1.00 mm × 1.00 mm
	DSBGA (6)	1.41 mm × 0.91 mm

(1) For all available packages, see the orderable addendum at the end of the datasheet.

Functional Block Diagram

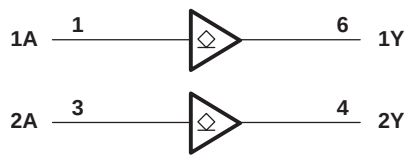

An IMPORTANT NOTICE at the end of this data sheet addresses availability, warranty, changes, use in safety-critical applications, intellectual property matters and other important disclaimers. PRODUCTION DATA.

chanhvinh.com

Table of Contents

1 Features ... 1
2 Applications ... 1
3 Description ... 1
4 Revision History ... 2
5 Pin Configuration and Functions ... 3
6 Specifications ... 4
6.1 Absolute Maximum Ratings ... 4
6.2 ESD Ratings ... 4
6.3 Recommended Operating Conditions ... 4
6.4 Thermal Information ... 5
6.5 Electrical Characteristics ... 5
6.6 Switching Characteristics from –40°C to 85°C ... 5
6.7 Switching Characteristics from –40°C to 125°C ... 5
6.8 Operating Characteristics ... 5
6.9 Typical Characteristics ... 6
7 Parameter Measurement Information ... 7
7.1 (Open-Drain) ... 7
8 Detailed Description ... 8
8.1 Overview ... 8
8.2 Functional Block Diagram ... 8
8.3 Feature Description ... 8
8.4 Device Functional Modes ... 8
9 Application and Implementation ... 9
9.1 Application Information ... 9
9.2 Typical Application ... 9
10 Power Supply Recommendations ... 10
11 Layout ... 10
11.1 Layout Guidelines ... 10
11.2 Layout Examples ... 10
12 Device and Documentation Support ... 11
12.1 Documentation Support ... 11
12.2 Community Resources ... 11
12.3 Trademarks ... 11
12.4 Electrostatic Discharge Caution ... 11
12.5 Glossary ... 11
13 Mechanical, Packaging, and Orderable Information ... 11

4 Revision History

NOTE: Page numbers for previous revisions may differ from page numbers in the current version.

Changes from Revision K (November 2013) to Revision L — **Page**

- Added *Pin Configuration and Functions* section, *ESD Ratings* table, *Feature Description* section, *Device Functional Modes*, *Application and Implementation* section, *Power Supply Recommendations* section, *Layout* section, *Device and Documentation Support* section, and *Mechanical, Packaging, and Orderable Information* section ... 1

Changes from Revision J (August 2012) to Revision K — **Page**

- Updated document to new TI data sheet format. ... 1
- Updated operating temperature range. ... 4

Copyright © 2001–2015, Texas Instruments Incorporated

chanhvinh.com

5 Pin Configuration and Functions

DBV Package
6-Pin SOT-23
Top View

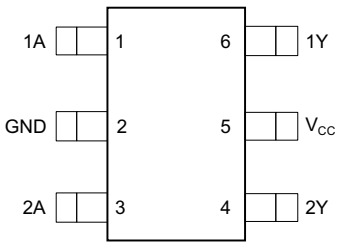

DCK Package
6-Pin SC70
Top View

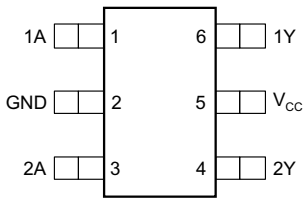

YZP Package
6-Pin DSBGA
Bottom View

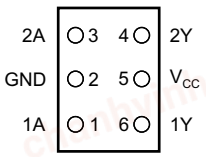

DRY Package
6-Pin SON
Top View

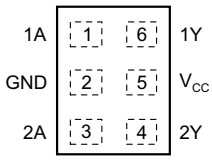

DSF Package
6-Pin SON
Top View

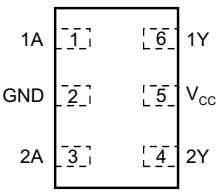

Pin Functions

PIN		I/O	DESCRIPTION
NAME	NO		
1A	1	I	Input 1
GND	2	—	Ground
2A	3	I	Input 2
2Y	4	O	Open-drain output 2
V_{CC}	5	—	Power pin
1Y	6	O	Open-drain output 1

Copyright © 2001–2015, Texas Instruments Incorporated

chanhvinh.com

6 Specifications

6.1 Absolute Maximum Ratings

over operating free-air temperature range (unless otherwise noted)(1)

			MIN	MAX	UNIT
V_{CC}	Supply voltage		–0.5	6.5	V
V_I	Input voltage(2)		–0.5	6.5	V
V_O	Voltage applied to any output in the high-impedance or power-off state(2)		–0.5	6.5	V
V_O	Voltage applied to any output in the high or low state(2)(3)		–0.5	6.5	V
I_{IK}	Input clamp current	$V_I < 0$		–50	mA
I_{OK}	Output clamp current	$V_O < 0$		–50	mA
I_O	Continuous output current			±50	mA
	Continuous current through V_{CC} or GND			±100	mA
T_{stg}	Storage Temperature		–65	150	°C

(1) Stresses beyond those listed under *Absolute Maximum Ratings* may cause permanent damage to the device. These are stress ratings only, and functional operation of the device at these or any other conditions beyond those indicated under *Recommended Operating Conditions* is not implied. Exposure to absolute-maximum-rated conditions for extended periods may affect device reliability.
(2) The input negative-voltage and output voltage ratings may be exceeded if the input and output current ratings are observed.
(3) The value of V_{CC} is provided in the *Recommended Operating Conditions* table.

6.2 ESD Ratings

			VALUE	UNIT
$V_{(ESD)}$	Electrostatic discharge	Human body model (HBM), per ANSI/ESDA/JEDEC JS-001(1)	+2000	V
		Charged-device model (CDM), per JEDEC specification JESD22-C101(2)	+1000	

(1) JEDEC document JEP155 states that 500-V HBM allows safe manufacturing with a standard ESD control process.
(2) JEDEC document JEP157 states that 250-V CDM allows safe manufacturing with a standard ESD control process.

6.3 Recommended Operating Conditions(1)

			MIN	MAX	UNIT
V_{CC}	Supply voltage	Operating	1.65	5.5	V
		Data retention only	1.5		
V_{IH}	High-level input voltage	V_{CC} = 1.65 V to 1.95 V	0.65 × V_{CC}		V
		V_{CC} = 2.3 V to 2.7 V	1.7		
		V_{CC} = 3 V to 3.6 V	2		
		V_{CC} = 4.5 V to 5.5 V	0.7 × V_{CC}		
V_{IL}	Low-level input voltage	V_{CC} = 1.65 V to 1.95 V		0.35 × V_{CC}	V
		V_{CC} = 2.3 V to 2.7 V		0.7	
		V_{CC} = 3 V to 3.6 V		0.8	
		V_{CC} = 4.5 V to 5.5 V		0.3 × V_{CC}	
V_I	Input voltage		0	5.5	V
V_O	Output voltage		0	5.5	V
I_{OL}	Low-level output current	V_{CC} = 1.65 V		4	mA
		V_{CC} = 2.3 V		8	
		V_{CC} = 3 V		16	
				24	
		V_{CC} = 4.5 V		32	
Δt/Δv	Input transition rise or fall rate	V_{CC} = 1.8 V ± 0.15 V, 2.5 V ± 0.2 V		20	ns/V
		V_{CC} = 3.3 V ± 0.3 V		10	
		V_{CC} = 5 V ± 0.5 V		5	

(1) All unused inputs of the device must be held at V_{CC} or GND to ensure proper device operation. Refer to the TI application report, *Implications of Slow or Floating CMOS Inputs*, literature number SCBA004.

Copyright © 2001–2015, Texas Instruments Incorporated

chanhvinh.com

Recommended Operating Conditions[1] (continued)

		MIN	MAX	UNIT
T_A	Operating free-air temperature	–40	125	°C

6.4 Thermal Information

THERMAL METRIC[1]		SN74LVC2G07					UNIT
		SOT-23	SC70	DRY (SON)	DSBGA	DSF (SON)	
		6 PINS	6 PINS	6 PINS	6 PINS	6 PINS	
$R_{\theta JA}$	Junction-to-ambient thermal resistance	165	259	234	123	300	°C/W

(1) For more information about traditional and new thermal metrics, see the *Semiconductor and IC Package Thermal Metrics* application report, SPRA953.

6.5 Electrical Characteristics

over recommended operating free-air temperature range (unless otherwise noted)

PARAMETER		TEST CONDITIONS	V_{CC}	–40°C to 85°C			–40°C to 125°C			UNIT
				MIN	TYP[1]	MAX	MIN	TYP[1]	MAX	
V_{OL}		I_{OL} = 100 µA	1.65 V to 5.5 V			0.1			0.1	V
		I_{OL} = 4 mA	1.65 V			0.45			0.45	
		I_{OL} = 8 mA	2.3 V			0.3			0.3	
		I_{OL} = 16 mA	3 V			0.4			0.4	
		I_{OL} = 24 mA				0.55			0.55	
		I_{OL} = 32 mA	4.5 V			0.55			0.55	
I_I	A inputs	V_I = 5.5 V or GND	0 to 5.5 V			±5			±5	µA
I_{off}		V_I or V_O = 5.5 V	0			±10			±10	µA
I_{CC}		V_I = 5.5 V or GND, I_O = 0	1.65 V to 5.5 V			10			10	µA
ΔI_{CC}		One input at V_{CC} – 0.6 V, Other inputs at V_{CC} or GND	3 V to 5.5 V			500			500	µA
C_I		V_I = V_{CC} or GND	3.3 V		3.5			3.5		pF

(1) All typical values are at V_{CC} = 3.3 V, T_A = 25°C.

6.6 Switching Characteristics from –40°C to 85°C

over recommended operating free-air temperature range (unless otherwise noted) (see Figure 2)

PARAMETER	FROM (INPUT)	TO (OUTPUT)	–40°C to 85°C								UNIT
			V_{CC} = 1.8 V ± 0.15 V		V_{CC} = 2.5 V ± 0.2 V		V_{CC} = 3.3 V ± 0.3 V		V_{CC} = 5 V ± 0.5 V		
			MIN	MAX	MIN	MAX	MIN	MAX	MIN	MAX	
t_{pd}	A	Y	1.5	8.6	1	4.4	1	3.7	1	2.9	ns

6.7 Switching Characteristics from –40°C to 125°C

over recommended operating free-air temperature range (unless otherwise noted) (see Figure 2)

PARAMETER	FROM (INPUT)	TO (OUTPUT)	–40°C to 125°C								UNIT
			V_{CC} = 1.8 V ± 0.15 V		V_{CC} = 2.5 V ± 0.2 V		V_{CC} = 3.3 V ± 0.3 V		V_{CC} = 5 V ± 0.5 V		
			MIN	MAX	MIN	MAX	MIN	MAX	MIN	MAX	
t_{pd}	A	Y	1.5	8.6	1	4.9	1	4.2	1	3.4	ns

6.8 Operating Characteristics

T_A = 25°C

PARAMETER		TEST CONDITIONS	V_{CC} = 1.8 V	V_{CC} = 2.5 V	V_{CC} = 3.3 V	V_{CC} = 5 V	UNIT
			TYP	TYP	TYP	TYP	
C_{pd}	Power dissipation capacitance	f = 10 MHz	3	3	4	4	pF

Copyright © 2001–2015, Texas Instruments Incorporated

chanhvinh.com

6.9 Typical Characteristics

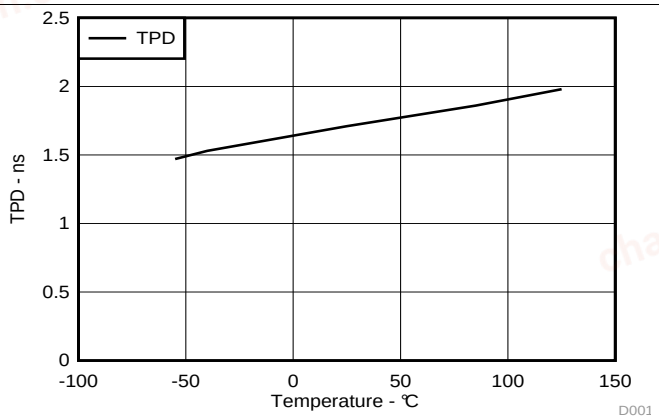

Figure 1. TPD Across Temperature at 3.3V Vcc

Copyright © 2001–2015, Texas Instruments Incorporated

chanhvinh.com

7 Parameter Measurement Information

7.1 (Open-Drain)

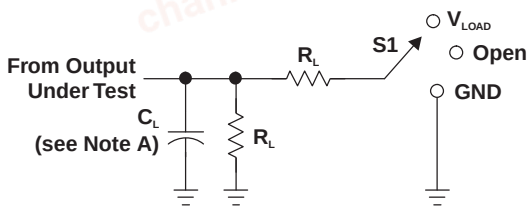

LOAD CIRCUIT

TEST	S1
t_{PZL} (see Notes E and F)	V_{LOAD}
t_{PLZ} (see Notes E and G)	V_{LOAD}
t_{PHZ}/t_{PZH}	V_{LOAD}

V_{CC}	INPUTS		V_M	V_{LOAD}	C_L	R_L	V_Δ
	V_I	t_r/t_f					
1.8 V ± 0.15 V	V_{CC}	≤2 ns	$V_{CC}/2$	2 × V_{CC}	30 pF	1 kΩ	0.15 V
2.5 V ± 0.2 V	V_{CC}	≤2 ns	$V_{CC}/2$	2 × V_{CC}	30 pF	500 Ω	0.15 V
3.3 V ± 0.3 V	3 V	≤2.5 ns	1.5 V	6 V	50 pF	500 Ω	0.3 V
5 V ± 0.5 V	V_{CC}	≤2.5 ns	$V_{CC}/2$	2 × V_{CC}	50 pF	500 Ω	0.3 V

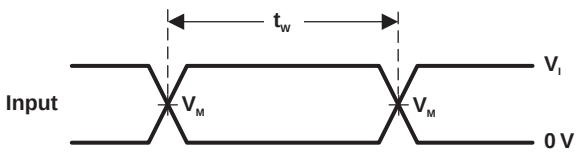

VOLTAGE WAVEFORMS
PULSE DURATION

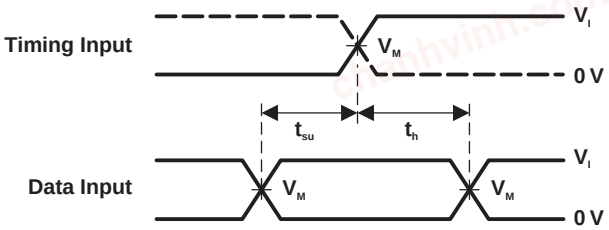

VOLTAGE WAVEFORMS
SETUP AND HOLD TIMES

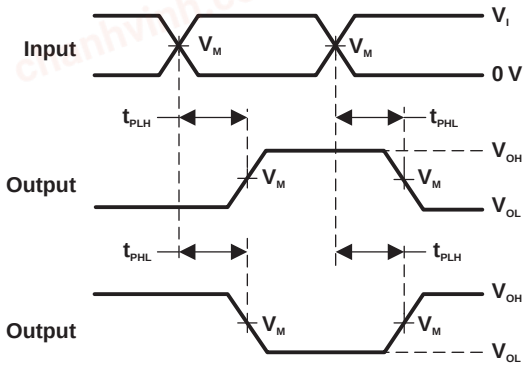

VOLTAGE WAVEFORMS
PROPAGATION DELAY TIMES
INVERTING AND NONINVERTING OUTPUTS

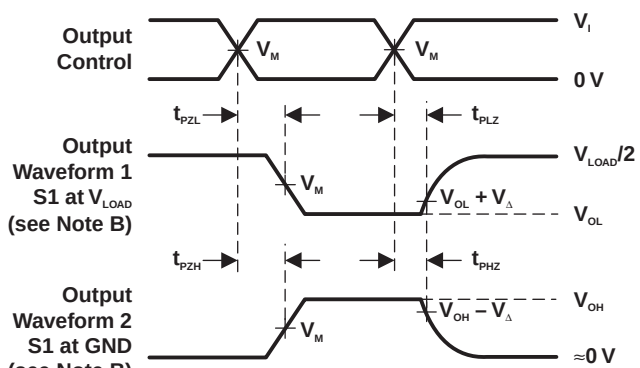

VOLTAGE WAVEFORMS
ENABLE AND DISABLE TIMES
LOW- AND HIGH-LEVEL ENABLING

NOTES: A. C_L includes probe and jig capacitance.
B. Waveform 1 is for an output with internal conditions such that the output is low, except when disabled by the output control. Waveform 2 is for an output with internal conditions such that the output is high, except when disabled by the output control.
C. All input pulses are supplied by generators have the following characteristics: PRR ≤ 10 MHz, Z_O = 50 Ω.
D. The outputs are measured one at a time, with one transition per measurement.
E. Because this device has open-drain outputs, t_{PLZ} and t_{PZL} are the same as t_{PD}.
F. t_{PZL} is measured at V_M.
G. t_{PLZ} is measured at V_{OL} + V_Δ.
H. All parameters and waveforms are not applicable to all devices.

Figure 2. Load Circuit and Voltage Waveforms

Copyright © 2001–2015, Texas Instruments Incorporated

chanhvinh.com

8 Detailed Description

8.1 Overview

The SN74LVC2G07 device contains two open drain buffer with a maximum sink current of 32 mA. This device is fully specified for partial-power-down applications using I_{off}. The I_{off} circuitry disables the outputs, preventing damaging current backflow through the device when it is powered down.

8.2 Functional Block Diagram

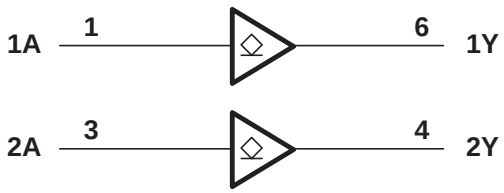

8.3 Feature Description

The open-drain configuration means that the device cannot provide its own output drive current; instead, it relies on pullup resistors to provide the "high" bus state. It can only drive the bus low. In the "Hi-Z" state, the SN74LVC2G07 acts as an open circuit and allows the external pullup to pull the bus high. Therefore, the pullup voltage determines the output level and therefore the SN74LVC2g07 can be used for up or down-translation. The device can sink 24 mA at 3 V while retaining an output voltage (V_{OL}) of 0.55 V or lower.

8.4 Device Functional Modes

Table 1 shows the device functional modes of the SN74LVC2G07 device.

Table 1. Function Table

INPUT A	OUTPUT Y
L	L
H	H

Copyright © 2001–2015, Texas Instruments Incorporated

chanhvinh.com

9 Application and Implementation

NOTE

Information in the following applications sections is not part of the TI component specification, and TI does not warrant its accuracy or completeness. TI's customers are responsible for determining suitability of components for their purposes. Customers should validate and test their design implementation to confirm system functionality.

9.1 Application Information

The SN74LVC2G07 is a high-drive CMOS device that can be used to implement a high output drive buffer, such as an LED application. It can sink 32 mA of current at 4.5 V making it ideal for high-drive and wired-OR/AND functions. The inputs are 5.5 V tolerant allowing it to translate up and down to V_{CC}.

9.2 Typical Application

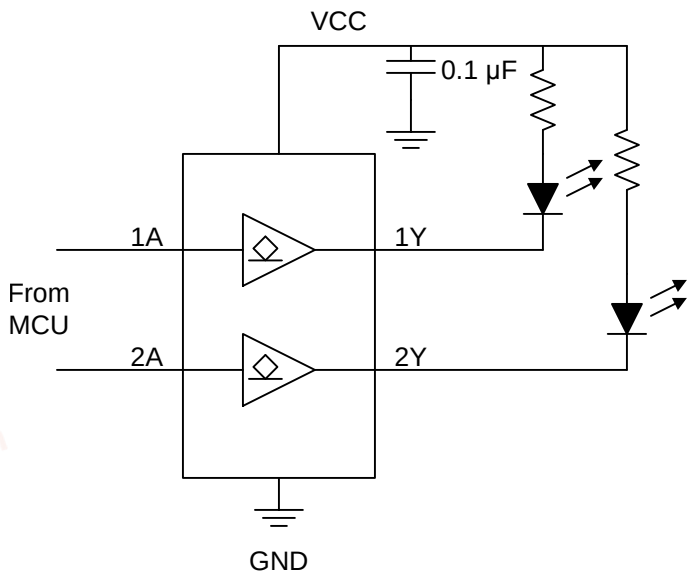

Figure 3. Typical Application

9.2.1 Design Requirements

1. Recommended Input Conditions
   - Rise time and fall time specs. See ($\Delta t/\Delta V$) in the *Recommended Operating Conditions* table.
   - Specified high and low levels. See (V_{IH} and V_{IL}) in the *Recommended Operating Conditions* table.
   - Inputs are overvoltage tolerant allowing them to go as high as (V_I max) in the *Recommended Operating Conditions* table at any valid V_{CC}.
2. Recommend Output Conditions
   - Load currents should not exceed (I_O max) per output and should not exceed (Continuous current through V_{CC} or GND) total current for the part. These limits are located in the *Absolute Maximum Ratings* table.
   - Outputs should not be pulled above 5.5 V.

9.2.2 Detailed Design Procedure

This device uses CMOS technology and has balanced output drive. Take care to avoid bus contention because it can drive currents that would exceed maximum limits. The high drive will also create fast edges into light loads so routing and load conditions should be considered to prevent ringing.

Copyright © 2001–2015, Texas Instruments Incorporated

chanhvinh.com

Typical Application (continued)

9.2.3 Application Curve

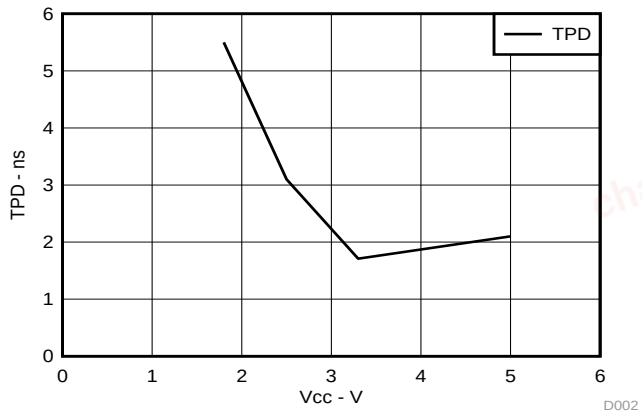

Figure 4. TPD Across V_{CC} at 25°C

10 Power Supply Recommendations

The power supply can be any voltage between the minimum and maximum supply voltage rating located in the *Recommended Operating Conditions* table.

Each V_{CC} pin should have a good bypass capacitor to prevent power disturbance. For devices with a single supply a 0.1-μF capacitor is recommended and if there are multiple V_{CC} pins then a 0.01-μF or 0.022-μF capacitor is recommended for each power pin. It is ok to parallel multiple bypass caps to reject different frequencies of noise. 0.1-μF and 1-μF capacitors are commonly used in parallel. The bypass capacitor should be installed as close to the power pin as possible for best results.

11 Layout

11.1 Layout Guidelines

When using multiple bit logic devices inputs should not ever float. In many cases, functions or parts of functions of digital logic devices are unused; for example, when only two inputs of a triple-input AND gate are used or only 3 of the 4 buffer gates are used. Such input pins should not be left unconnected because the undefined voltages at the outside connections result in undefined operational states. Specified below are the rules that must be observed under all circumstances. All unused inputs of digital logic devices must be connected to a high or low bias to prevent them from floating. The logic level that should be applied to any particular unused input depends on the function of the device. Generally they will be tied to GND or V_{CC} whichever make more sense or is more convenient.

11.2 Layout Examples

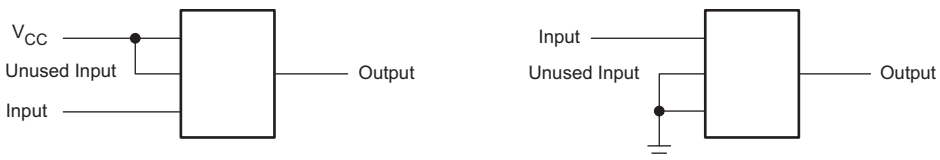

Figure 5. Layout Examples for SN74LVC2G07

Copyright © 2001–2015, Texas Instruments Incorporated

chanhvinh.com

12 Device and Documentation Support

12.1 Documentation Support

12.1.1 Related Documentation

For related documentation, see the following:

Implications of Slow or Floating CMOS Inputs, SCBA004.

12.2 Community Resources

The following links connect to TI community resources. Linked contents are provided "AS IS" by the respective contributors. They do not constitute TI specifications and do not necessarily reflect TI's views; see TI's Terms of Use.

TI E2E™ Online Community ***TI's Engineer-to-Engineer (E2E) Community.*** Created to foster collaboration among engineers. At e2e.ti.com, you can ask questions, share knowledge, explore ideas and help solve problems with fellow engineers.

Design Support ***TI's Design Support*** Quickly find helpful E2E forums along with design support tools and contact information for technical support.

12.3 Trademarks

NanoFree, E2E are trademarks of Texas Instruments.

12.4 Electrostatic Discharge Caution



These devices have limited built-in ESD protection. The leads should be shorted together or the device placed in conductive foam during storage or handling to prevent electrostatic damage to the MOS gates.

12.5 Glossary

SLYZ022 — *TI Glossary*.

This glossary lists and explains terms, acronyms, and definitions.

13 Mechanical, Packaging, and Orderable Information

The following pages include mechanical, packaging, and orderable information. This information is the most current data available for the designated devices. This data is subject to change without notice and revision of this document. For browser-based versions of this data sheet, refer to the left-hand navigation.

chanhvinh.com

chanhvinh.com

PACKAGE OPTION ADDENDUM

www.ti.com

27-Jan-2021

PACKAGING INFORMATION

Orderable Device	Status (1)	Package Type	Package Drawing	Pins	Package Qty	Eco Plan (2)	Lead finish/ Ball material (6)	MSL Peak Temp (3)	Op Temp (°C)	Device Marking (4/5)	Samples
SN74LVC2G07DBVR	ACTIVE	SOT-23	DBV	6	3000	RoHS & Green	NIPDAU | SN	Level-1-260C-UNLIM	-40 to 125	(C075, C07F, C07K, C07R)	Samples
SN74LVC2G07DBVRG4	ACTIVE	SOT-23	DBV	6	3000	RoHS & Green	NIPDAU	Level-1-260C-UNLIM	-40 to 125	(C07F, C07R)	Samples
SN74LVC2G07DCKR	ACTIVE	SC70	DCK	6	3000	RoHS & Green	NIPDAU | SN	Level-1-260C-UNLIM	-40 to 125	(CV5, CVF, CVJ, CVK, CVR)	Samples
SN74LVC2G07DCKRE4	ACTIVE	SC70	DCK	6	3000	RoHS & Green	NIPDAU	Level-1-260C-UNLIM	-40 to 125	CV5	Samples
SN74LVC2G07DCKRG4	ACTIVE	SC70	DCK	6	3000	RoHS & Green	NIPDAU	Level-1-260C-UNLIM	-40 to 125	CV5	Samples
SN74LVC2G07DCKT	ACTIVE	SC70	DCK	6	250	RoHS & Green	NIPDAU | SN	Level-1-260C-UNLIM	-40 to 125	(CV5, CVF, CVJ, CVK, CVR)	Samples
SN74LVC2G07DCKTG4	ACTIVE	SC70	DCK	6	250	RoHS & Green	NIPDAU	Level-1-260C-UNLIM	-40 to 125	CV5	Samples
SN74LVC2G07DRYR	ACTIVE	SON	DRY	6	5000	RoHS & Green	NIPDAU	Level-1-260C-UNLIM	-40 to 125	CV	Samples
SN74LVC2G07DSF2	ACTIVE	SON	DSF	6	5000	RoHS & Green	NIPDAU	Level-1-260C-UNLIM	-40 to 125	CV	Samples
SN74LVC2G07DSFR	ACTIVE	SON	DSF	6	5000	RoHS & Green	NIPDAU	Level-1-260C-UNLIM	-40 to 125	CV	Samples
SN74LVC2G07YZPR	ACTIVE	DSBGA	YZP	6	3000	RoHS & Green	SNAGCU	Level-1-260C-UNLIM	-40 to 125	(CV7, CVN)	Samples

(1) The marketing status values are defined as follows:
ACTIVE: Product device recommended for new designs.
LIFEBUY: TI has announced that the device will be discontinued, and a lifetime-buy period is in effect.
NRND: Not recommended for new designs. Device is in production to support existing customers, but TI does not recommend using this part in a new design.
PREVIEW: Device has been announced but is not in production. Samples may or may not be available.
OBSOLETE: TI has discontinued the production of the device.

(2) **RoHS:** TI defines "RoHS" to mean semiconductor products that are compliant with the current EU RoHS requirements for all 10 RoHS substances, including the requirement that RoHS substance do not exceed 0.1% by weight in homogeneous materials. Where designed to be soldered at high temperatures, "RoHS" products are suitable for use in specified lead-free processes. TI may reference these types of products as "Pb-Free".
RoHS Exempt: TI defines "RoHS Exempt" to mean products that contain lead but are compliant with EU RoHS pursuant to a specific EU RoHS exemption.
Green: TI defines "Green" to mean the content of Chlorine (Cl) and Bromine (Br) based flame retardants meet JS709B low halogen requirements of <=1000ppm threshold. Antimony trioxide based flame retardants must also meet the <=1000ppm threshold requirement.

(3) MSL, Peak Temp. - The Moisture Sensitivity Level rating according to the JEDEC industry standard classifications, and peak solder temperature.

chanhvinh.com

(4) There may be additional marking, which relates to the logo, the lot trace code information, or the environmental category on the device.

(5) Multiple Device Markings will be inside parentheses. Only one Device Marking contained in parentheses and separated by a "~" will appear on a device. If a line is indented then it is a continuation of the previous line and the two combined represent the entire Device Marking for that device.

(6) Lead finish/Ball material - Orderable Devices may have multiple material finish options. Finish options are separated by a vertical ruled line. Lead finish/Ball material values may wrap to two lines if the finish value exceeds the maximum column width.

Important Information and Disclaimer: The information provided on this page represents TI's knowledge and belief as of the date that it is provided. TI bases its knowledge and belief on information provided by third parties, and makes no representation or warranty as to the accuracy of such information. Efforts are underway to better integrate information from third parties. TI has taken and continues to take reasonable steps to provide representative and accurate information but may not have conducted destructive testing or chemical analysis on incoming materials and chemicals. TI and TI suppliers consider certain information to be proprietary, and thus CAS numbers and other limited information may not be available for release.

In no event shall TI's liability arising out of such information exceed the total purchase price of the TI part(s) at issue in this document sold by TI to Customer on an annual basis.

OTHER QUALIFIED VERSIONS OF SN74LVC2G07 :

- Enhanced Product: SN74LVC2G07-EP

NOTE: Qualified Version Definitions:

- Enhanced Product - Supports Defense, Aerospace and Medical Applications

chanhvinh.com

PACKAGE MATERIALS INFORMATION

TAPE AND REEL INFORMATION

REEL DIMENSIONS

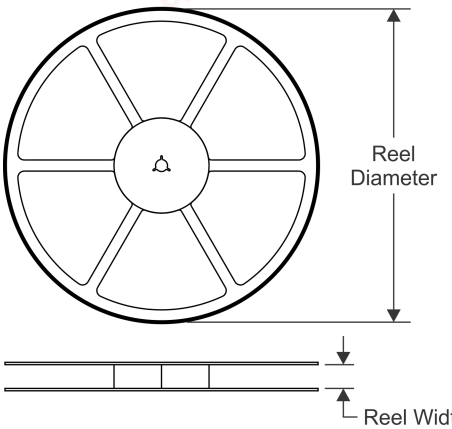

TAPE DIMENSIONS

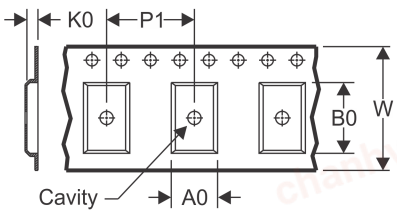

A0	Dimension designed to accommodate the component width
B0	Dimension designed to accommodate the component length
K0	Dimension designed to accommodate the component thickness
W	Overall width of the carrier tape
P1	Pitch between successive cavity centers

QUADRANT ASSIGNMENTS FOR PIN 1 ORIENTATION IN TAPE

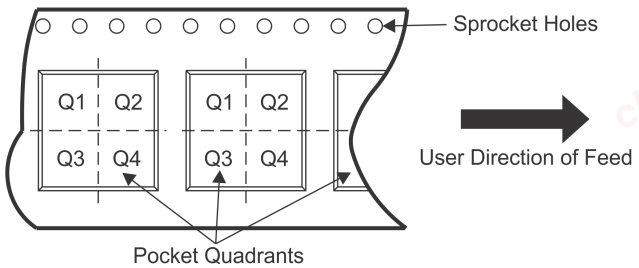

*All dimensions are nominal

Device	Package Type	Package Drawing	Pins	SPQ	Reel Diameter (mm)	Reel Width W1 (mm)	A0 (mm)	B0 (mm)	K0 (mm)	P1 (mm)	W (mm)	Pin1 Quadrant
SN74LVC2G07DBVR	SOT-23	DBV	6	3000	178.0	9.2	3.3	3.23	1.55	4.0	8.0	Q3
SN74LVC2G07DBVR	SOT-23	DBV	6	3000	178.0	9.0	3.23	3.17	1.37	4.0	8.0	Q3
SN74LVC2G07DBVRG4	SOT-23	DBV	6	3000	178.0	9.0	3.23	3.17	1.37	4.0	8.0	Q3
SN74LVC2G07DCKR	SC70	DCK	6	3000	178.0	9.2	2.4	2.4	1.22	4.0	8.0	Q3
SN74LVC2G07DCKR	SC70	DCK	6	3000	178.0	9.0	2.4	2.5	1.2	4.0	8.0	Q3
SN74LVC2G07DCKR	SC70	DCK	6	3000	180.0	8.4	2.41	2.41	1.2	4.0	8.0	Q3
SN74LVC2G07DCKR	SC70	DCK	6	3000	178.0	9.0	2.4	2.5	1.2	4.0	8.0	Q3
SN74LVC2G07DCKRG4	SC70	DCK	6	3000	178.0	9.2	2.4	2.4	1.22	4.0	8.0	Q3
SN74LVC2G07DCKT	SC70	DCK	6	250	180.0	8.4	2.41	2.41	1.2	4.0	8.0	Q3
SN74LVC2G07DCKT	SC70	DCK	6	250	178.0	9.0	2.4	2.5	1.2	4.0	8.0	Q3
SN74LVC2G07DCKT	SC70	DCK	6	250	178.0	9.0	2.4	2.5	1.2	4.0	8.0	Q3
SN74LVC2G07DCKT	SC70	DCK	6	250	178.0	9.2	2.4	2.4	1.22	4.0	8.0	Q3
SN74LVC2G07DCKTG4	SC70	DCK	6	250	178.0	9.2	2.4	2.4	1.22	4.0	8.0	Q3
SN74LVC2G07DRYR	SON	DRY	6	5000	180.0	9.5	1.15	1.6	0.75	4.0	8.0	Q1
SN74LVC2G07DSF2	SON	DSF	6	5000	180.0	8.4	1.16	1.16	0.5	4.0	8.0	Q3
SN74LVC2G07DSFR	SON	DSF	6	5000	180.0	9.5	1.16	1.16	0.5	4.0	8.0	Q2
SN74LVC2G07YZPR	DSBGA	YZP	6	3000	178.0	9.2	1.02	1.52	0.63	4.0	8.0	Q1

chanhvinh.com

TAPE AND REEL BOX DIMENSIONS

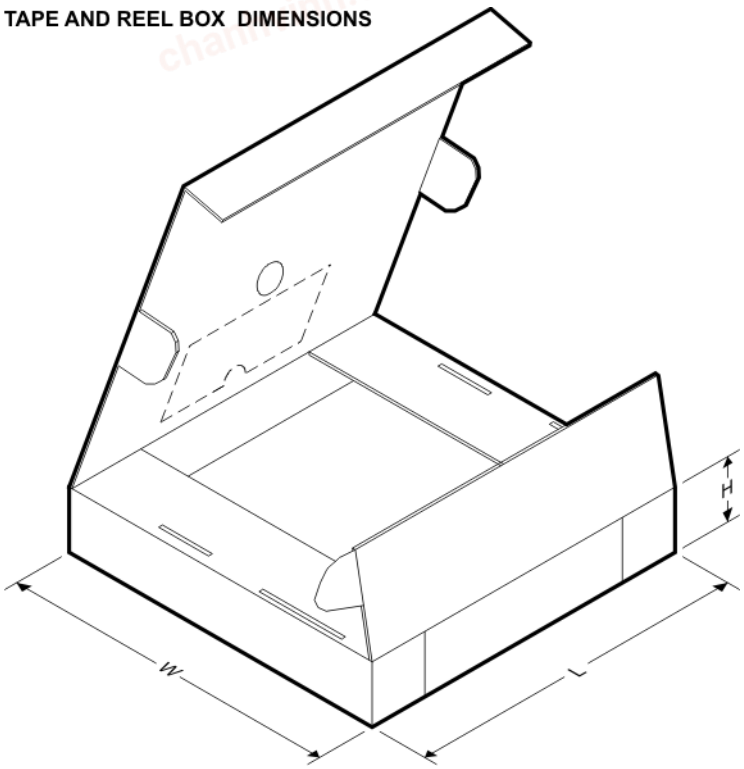

*All dimensions are nominal

Device	Package Type	Package Drawing	Pins	SPQ	Length (mm)	Width (mm)	Height (mm)
SN74LVC2G07DBVR	SOT-23	DBV	6	3000	180.0	180.0	18.0
SN74LVC2G07DBVR	SOT-23	DBV	6	3000	180.0	180.0	18.0
SN74LVC2G07DBVRG4	SOT-23	DBV	6	3000	180.0	180.0	18.0
SN74LVC2G07DCKR	SC70	DCK	6	3000	180.0	180.0	18.0
SN74LVC2G07DCKR	SC70	DCK	6	3000	180.0	180.0	18.0
SN74LVC2G07DCKR	SC70	DCK	6	3000	202.0	201.0	28.0
SN74LVC2G07DCKR	SC70	DCK	6	3000	180.0	180.0	18.0
SN74LVC2G07DCKRG4	SC70	DCK	6	3000	180.0	180.0	18.0
SN74LVC2G07DCKT	SC70	DCK	6	250	202.0	201.0	28.0
SN74LVC2G07DCKT	SC70	DCK	6	250	180.0	180.0	18.0
SN74LVC2G07DCKT	SC70	DCK	6	250	180.0	180.0	18.0
SN74LVC2G07DCKT	SC70	DCK	6	250	180.0	180.0	18.0
SN74LVC2G07DCKTG4	SC70	DCK	6	250	180.0	180.0	18.0
SN74LVC2G07DRYR	SON	DRY	6	5000	184.0	184.0	19.0
SN74LVC2G07DSF2	SON	DSF	6	5000	210.0	185.0	35.0
SN74LVC2G07DSFR	SON	DSF	6	5000	184.0	184.0	19.0
SN74LVC2G07YZPR	DSBGA	YZP	6	3000	220.0	220.0	35.0

chanhvinh.com

DCK (R–PDSO–G6) PLASTIC SMALL–OUTLINE PACKAGE

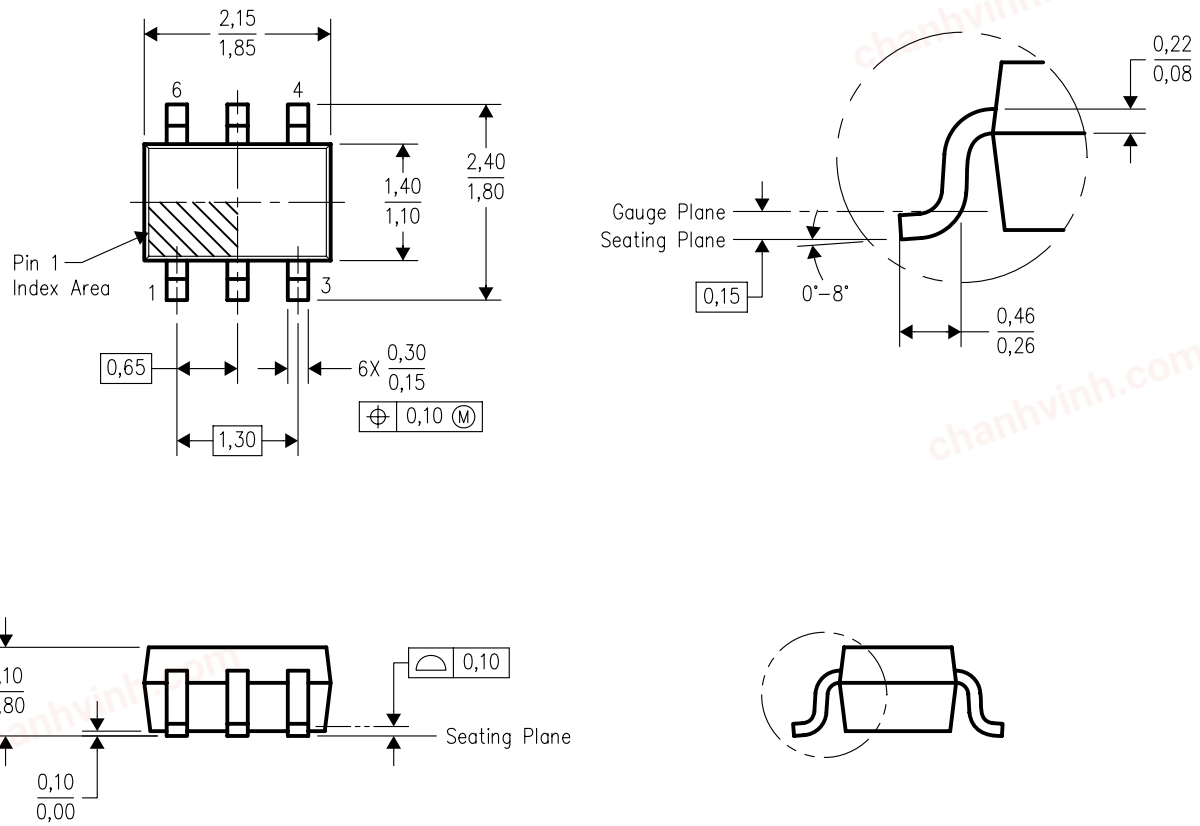

4093553–4/G 01/2007

NOTES:
A. All linear dimensions are in millimeters.
B. This drawing is subject to change without notice.
C. Body dimensions do not include mold flash or protrusion. Mold flash and protrusion shall not exceed 0.15 per side.
D. Falls within JEDEC MO–203 variation AB.

chanhvinh.com

DCK (R–PDSO–G6) PLASTIC SMALL OUTLINE

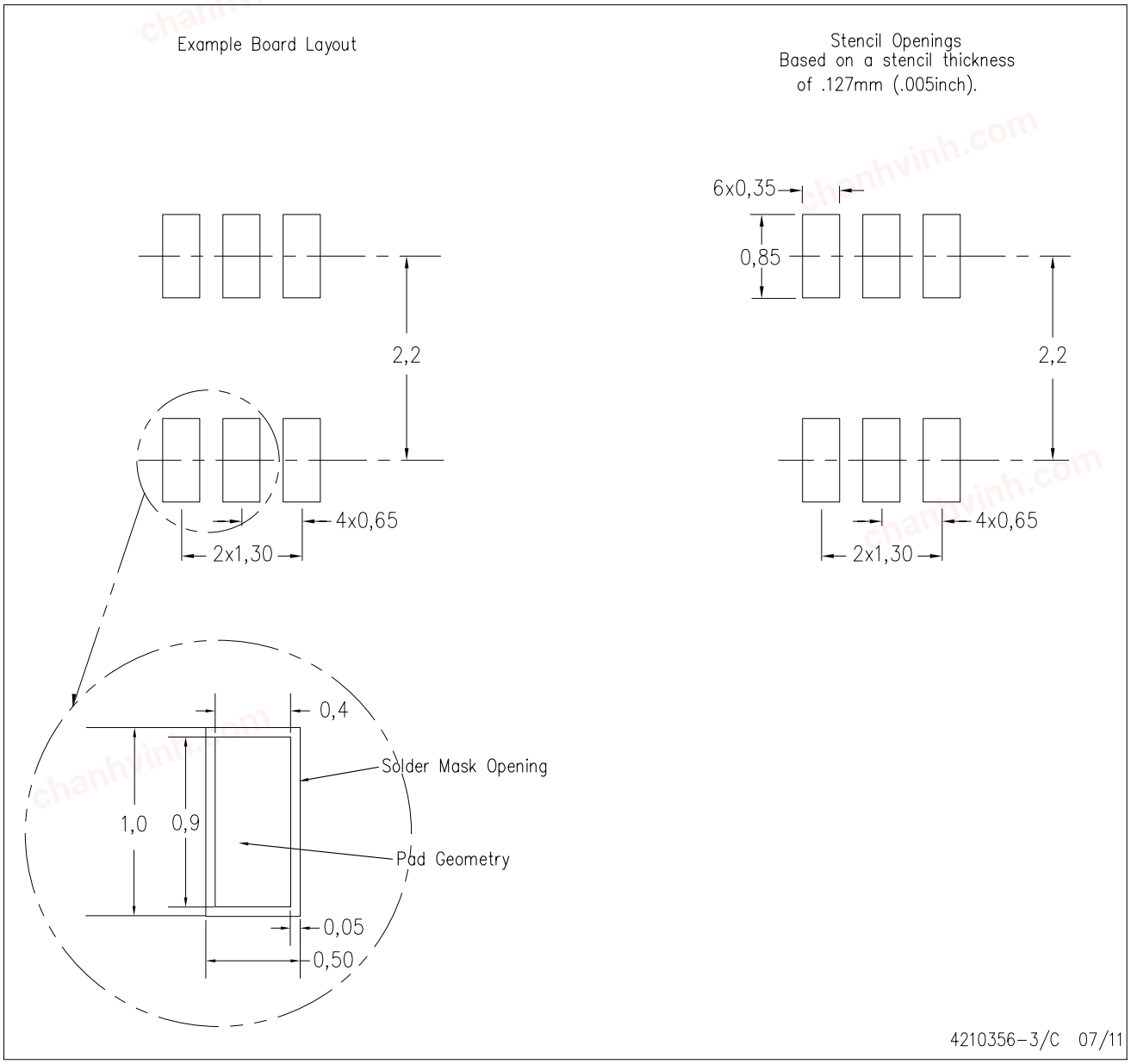

NOTES:
A. All linear dimensions are in millimeters.
B. This drawing is subject to change without notice.
C. Customers should place a note on the circuit board fabrication drawing not to alter the center solder mask defined pad.
D. Publication IPC–7351 is recommended for alternate designs.
E. Laser cutting apertures with trapezoidal walls and also rounding corners will offer better paste release. Customers should contact their board assembly site for stencil design recommendations. Example stencil design based on a 50% volumetric metal load solder paste. Refer to IPC–7525 for other stencil recommendations.

chanhvinh.com

PACKAGE OUTLINE

DSF0006A

X2SON - 0.4 mm max height

PLASTIC SMALL OUTLINE - NO LEAD

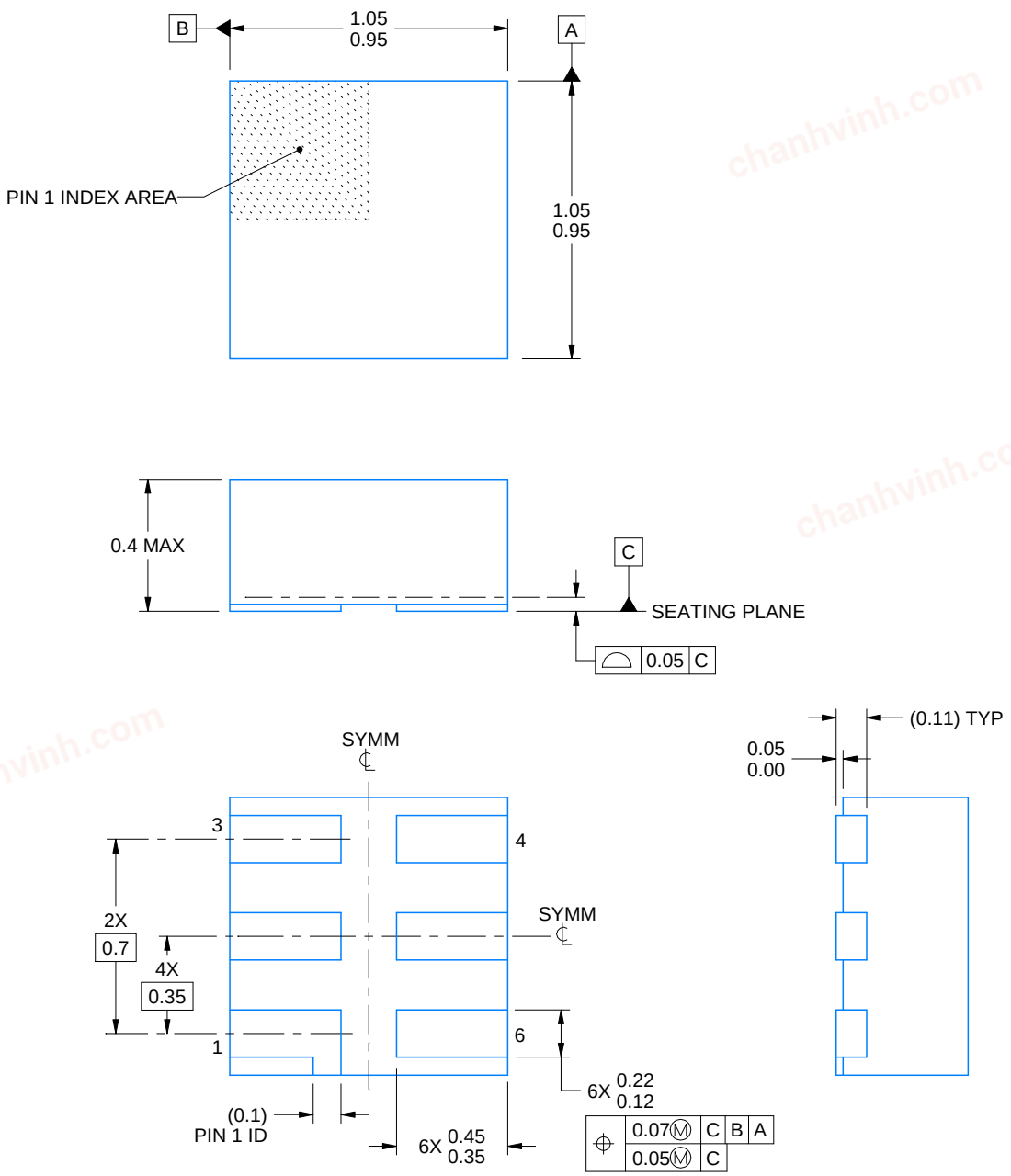

NOTES:

1. All linear dimensions are in millimeters. Any dimensions in parenthesis are for reference only. Dimensioning and tolerancing per ASME Y14.5M.
2. This drawing is subject to change without notice.
3. Reference JEDEC registration MO-287, variation X2AAF.

chanhvinh.com

EXAMPLE BOARD LAYOUT

DSF0006A

X2SON - 0.4 mm max height

PLASTIC SMALL OUTLINE - NO LEAD

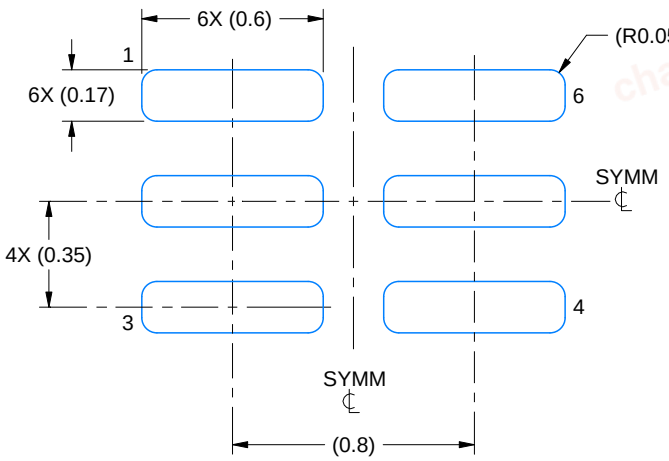

LAND PATTERN EXAMPLE
EXPOSED METAL SHOWN
SCALE:40X

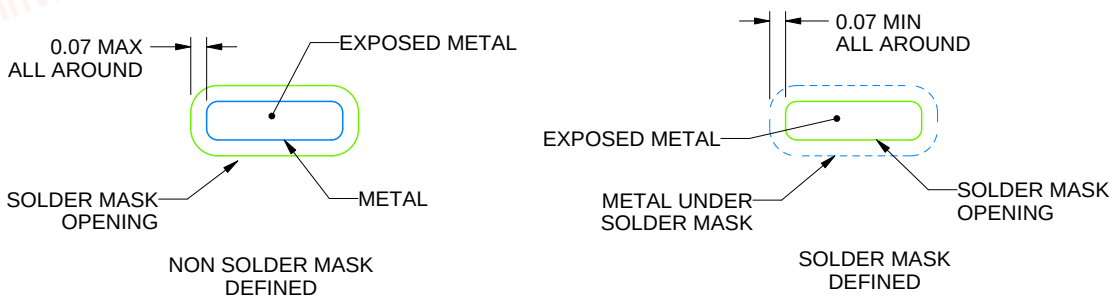

SOLDER MASK DETAILS

4220597/A 06/2017

NOTES: (continued)

4. For more information, see Texas Instruments literature number SLUA271 (www.ti.com/lit/slua271).

chanhvinh.com

EXAMPLE STENCIL DESIGN

DSF0006A

X2SON - 0.4 mm max height

PLASTIC SMALL OUTLINE - NO LEAD

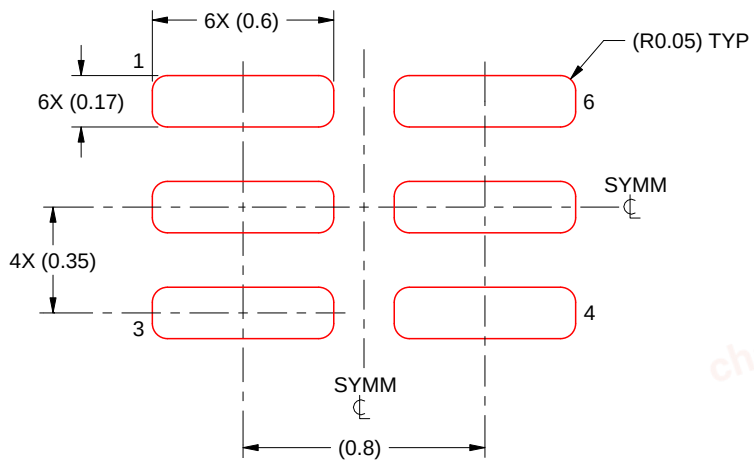

SOLDER PASTE EXAMPLE
BASED ON 0.125 mm THICK STENCIL

PRINTED SOLDER COVERAGE BY AREA UNDER PACKAGE
SCALE:40X

4220597/A 06/2017

4. Laser cutting apertures with trapezoidal walls and rounded corners may offer better paste release. IPC-7525 may have alternate design recommendations.

chanhvinh.com

PACKAGE OUTLINE

DBV0006A

SOT-23 - 1.45 mm max height

SMALL OUTLINE TRANSISTOR

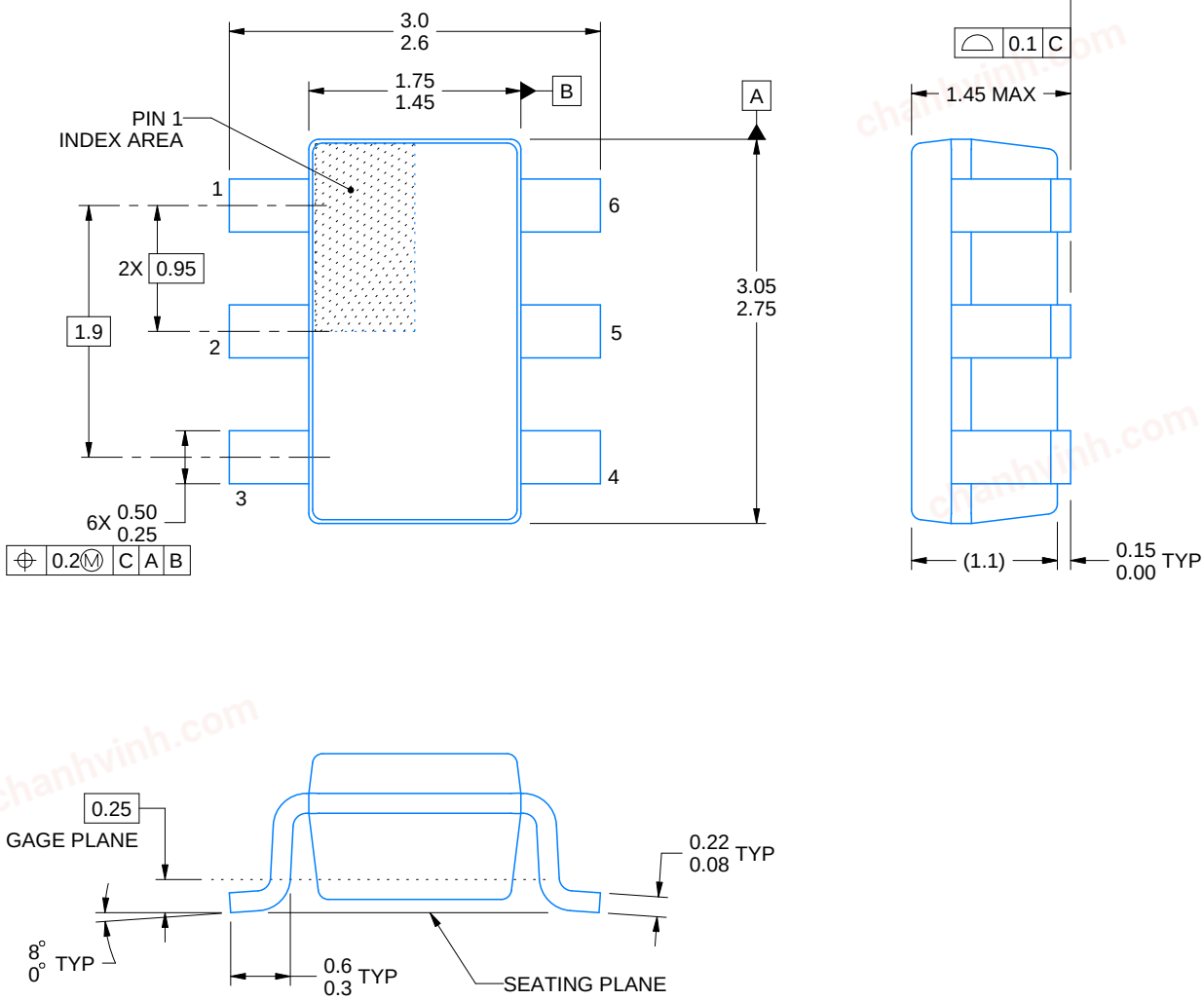

4214840/C 06/2021

NOTES:

1. All linear dimensions are in millimeters. Any dimensions in parenthesis are for reference only. Dimensioning and tolerancing per ASME Y14.5M.
2. This drawing is subject to change without notice.
3. Body dimensions do not include mold flash or protrusion. Mold flash and protrusion shall not exceed 0.25 per side.
4. Leads 1,2,3 may be wider than leads 4,5,6 for package orientation.
5. Refernce JEDEC MO-178.

chanhvinh.com

EXAMPLE BOARD LAYOUT

DBV0006A

SOT-23 - 1.45 mm max height

SMALL OUTLINE TRANSISTOR

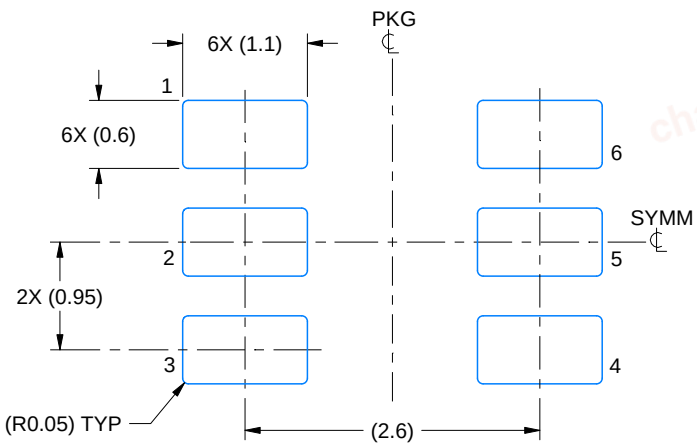

LAND PATTERN EXAMPLE
EXPOSED METAL SHOWN
SCALE:15X

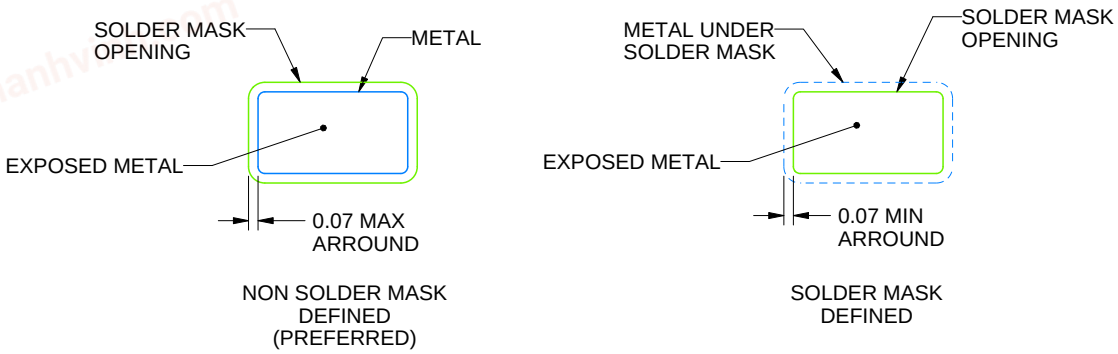

SOLDER MASK DETAILS

4214840/C 06/2021

NOTES: (continued)

6. Publication IPC-7351 may have alternate designs.
7. Solder mask tolerances between and around signal pads can vary based on board fabrication site.

chanhvinh.com

EXAMPLE STENCIL DESIGN

DBV0006A

SOT-23 - 1.45 mm max height

SMALL OUTLINE TRANSISTOR

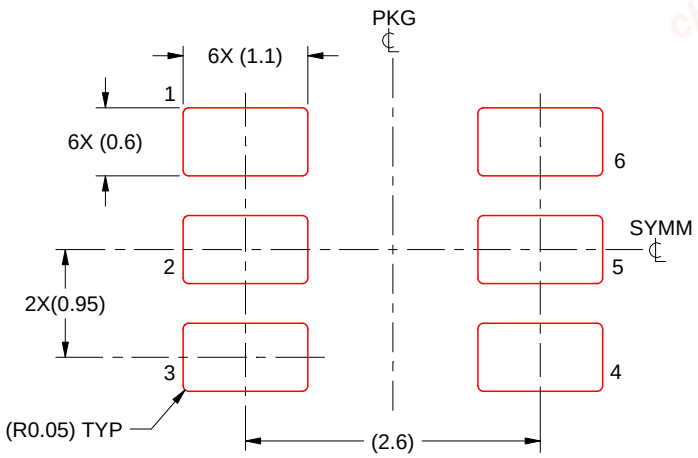

SOLDER PASTE EXAMPLE
BASED ON 0.125 mm THICK STENCIL
SCALE:15X

4214840/C 06/2021

NOTES: (continued)

8. Laser cutting apertures with trapezoidal walls and rounded corners may offer better paste release. IPC-7525 may have alternate design recommendations.
9. Board assembly site may have different recommendations for stencil design.

chanhvinh.com

PACKAGE OUTLINE

YZP0006

DSBGA - 0.5 mm max height

DIE SIZE BALL GRID ARRAY

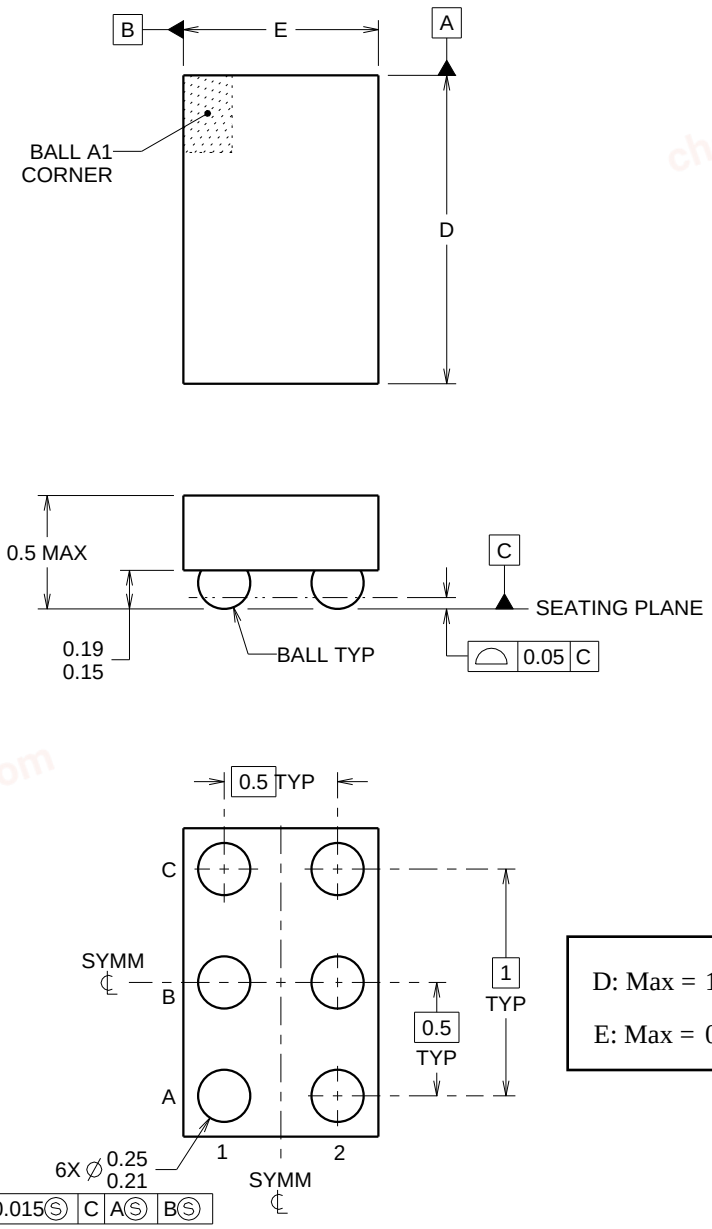

D: Max = 1.418 mm, Min =1.357 mm

E: Max = 0.918 mm, Min =0.857 mm

4219524/A 06/2014

NOTES:

NanoFree Is a trademark of Texas Instruments.

1. All linear dimensions are in millimeters. Any dimensions in parenthesis are for reference only. Dimensioning and tolerancing per ASME Y14.5M.
2. This drawing is subject to change without notice.
3. NanoFree™ package configuration.

chanhvinh.com

EXAMPLE BOARD LAYOUT

YZP0006

DSBGA - 0.5 mm max height

DIE SIZE BALL GRID ARRAY

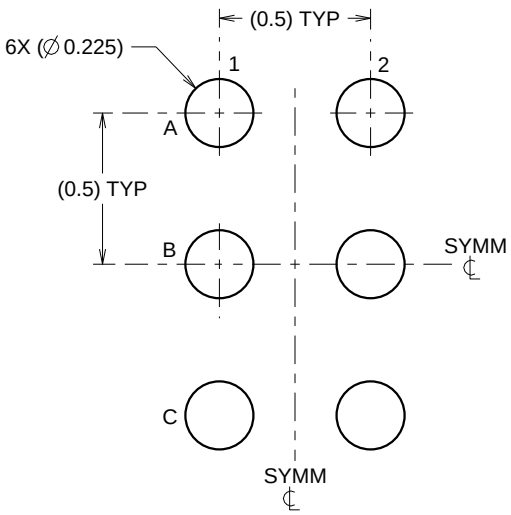

LAND PATTERN EXAMPLE
SCALE:40X

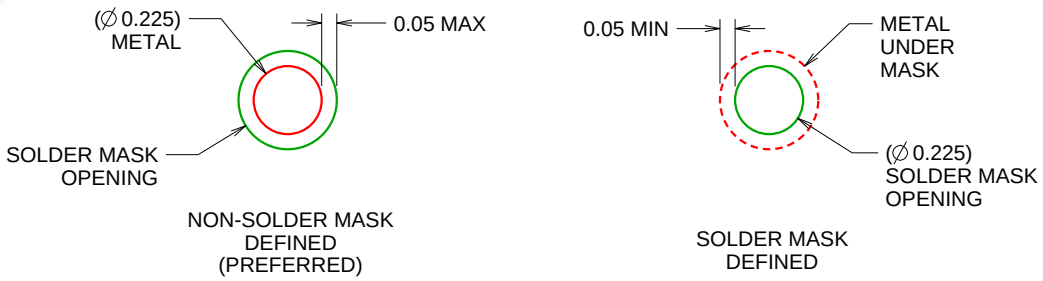

SOLDER MASK DETAILS
NOT TO SCALE

4219524/A 06/2014

NOTES: (continued)

4. Final dimensions may vary due to manufacturing tolerance considerations and also routing constraints. For more information, see Texas Instruments literature number SBVA017 (www.ti.com/lit/sbva017).

chanhvinh.com

EXAMPLE STENCIL DESIGN

YZP0006

DSBGA - 0.5 mm max height

DIE SIZE BALL GRID ARRAY

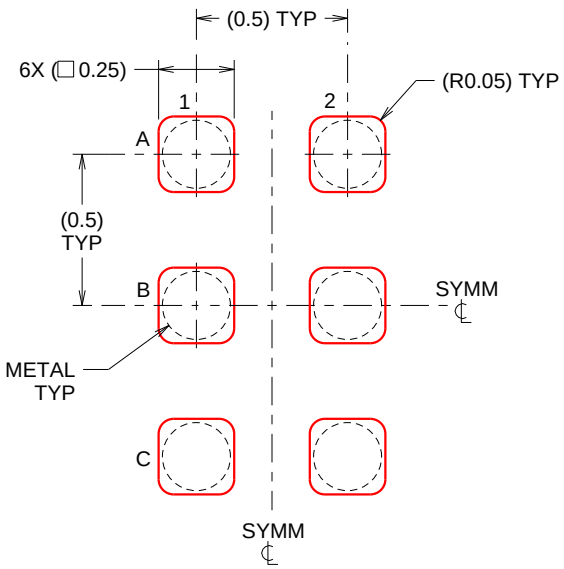

SOLDER PASTE EXAMPLE
BASED ON 0.1 mm THICK STENCIL
SCALE:40X

4219524/A 06/2014

NOTES: (continued)

5. Laser cutting apertures with trapezoidal walls and rounded corners may offer better paste release.

chanhvinh.com

GENERIC PACKAGE VIEW

DRY 6 USON - 0.6 mm max height

PLASTIC SMALL OUTLINE - NO LEAD



Images above are just a representation of the package family, actual package may vary.
Refer to the product data sheet for package details.

chanhvinh.com

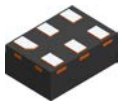

PACKAGE OUTLINE

DRY0006A

USON - 0.6 mm max height

PLASTIC SMALL OUTLINE - NO LEAD

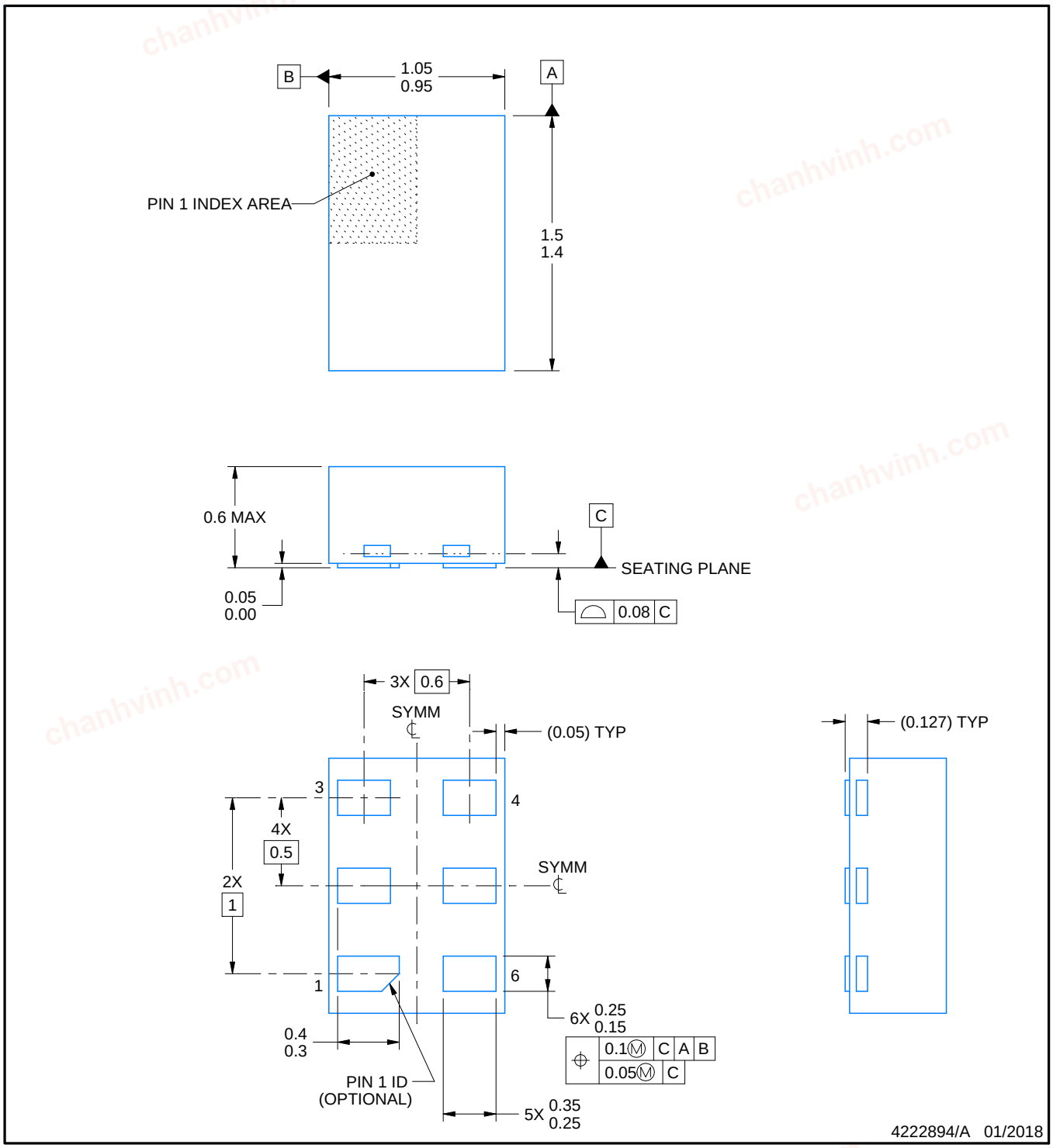

NOTES:

1. All linear dimensions are in millimeters. Any dimensions in parenthesis are for reference only. Dimensioning and tolerancing per ASME Y14.5M.
2. This drawing is subject to change without notice.

chanhvinh.com

EXAMPLE BOARD LAYOUT

DRY0006A

USON - 0.6 mm max height

PLASTIC SMALL OUTLINE - NO LEAD

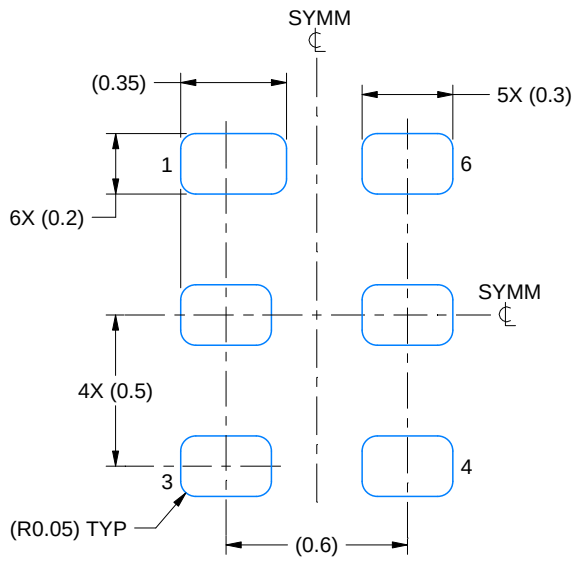

LAND PATTERN EXAMPLE
1:1 RATIO WITH PKG SOLDER PADS
EXPOSED METAL SHOWN
SCALE:40X

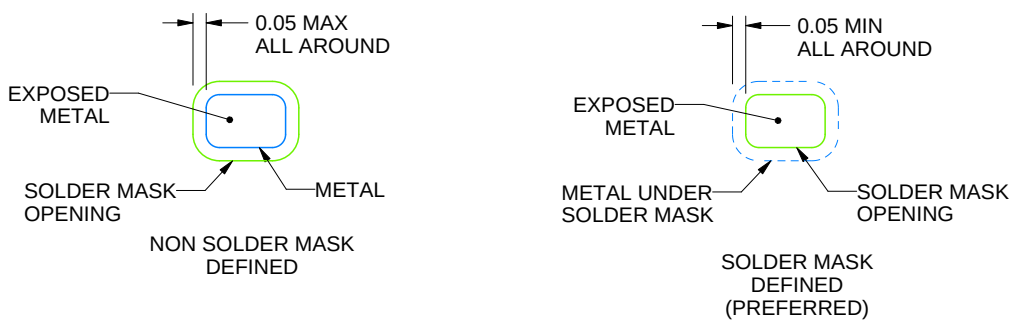

SOLDER MASK DETAILS

4222894/A 01/2018

NOTES: (continued)

3. For more information, see QFN/SON PCB application report in literature No. SLUA271 (www.ti.com/lit/slua271).

chanhvinh.com

EXAMPLE STENCIL DESIGN

DRY0006A

USON - 0.6 mm max height

PLASTIC SMALL OUTLINE - NO LEAD

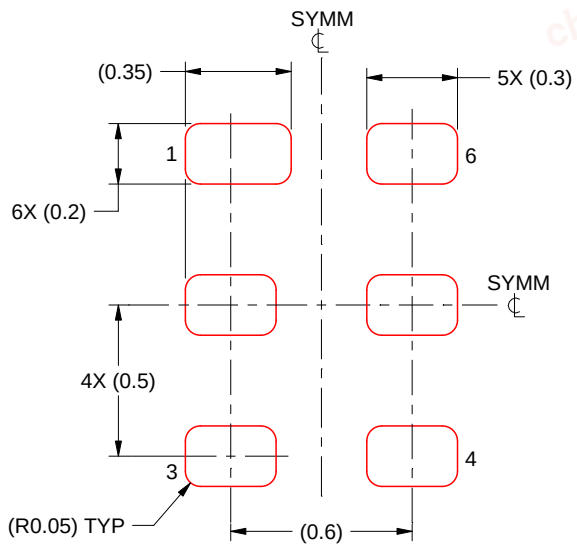

SOLDER PASTE EXAMPLE
BASED ON 0.075 - 0.1 mm THICK STENCIL
SCALE:40X

4222894/A 01/2018

NOTES: (continued)

4. Laser cutting apertures with trapezoidal walls and rounded corners may offer better paste release. IPC-7525 may have alternate design recommendations.

chanhvinh.com

IMPORTANT NOTICE AND DISCLAIMER

TI PROVIDES TECHNICAL AND RELIABILITY DATA (INCLUDING DATA SHEETS), DESIGN RESOURCES (INCLUDING REFERENCE DESIGNS), APPLICATION OR OTHER DESIGN ADVICE, WEB TOOLS, SAFETY INFORMATION, AND OTHER RESOURCES “AS IS” AND WITH ALL FAULTS, AND DISCLAIMS ALL WARRANTIES, EXPRESS AND IMPLIED, INCLUDING WITHOUT LIMITATION ANY IMPLIED WARRANTIES OF MERCHANTABILITY, FITNESS FOR A PARTICULAR PURPOSE OR NON-INFRINGEMENT OF THIRD PARTY INTELLECTUAL PROPERTY RIGHTS.

These resources are intended for skilled developers designing with TI products. You are solely responsible for (1) selecting the appropriate TI products for your application, (2) designing, validating and testing your application, and (3) ensuring your application meets applicable standards, and any other safety, security, regulatory or other requirements.

These resources are subject to change without notice. TI grants you permission to use these resources only for development of an application that uses the TI products described in the resource. Other reproduction and display of these resources is prohibited. No license is granted to any other TI intellectual property right or to any third party intellectual property right. TI disclaims responsibility for, and you will fully indemnify TI and its representatives against, any claims, damages, costs, losses, and liabilities arising out of your use of these resources.

TI’s products are provided subject to TI’s Terms of Sale or other applicable terms available either on ti.com or provided in conjunction with such TI products. TI’s provision of these resources does not expand or otherwise alter TI’s applicable warranties or warranty disclaimers for TI products.

TI objects to and rejects any additional or different terms you may have proposed.

Mailing Address: Texas Instruments, Post Office Box 655303, Dallas, Texas 75265
Copyright © 2022, Texas Instruments Incorporated