chanhvinh.com

SN74LVC1G74 Single Positive-Edge-Triggered D-Type Flip-Flop with Clear and Preset

1 Features

- Available in the Texas Instruments NanoFree™ package
- Supports 5-V V_{CC} operation
- Inputs accept voltages to 5.5-V
- Supports down translation to V_{CC}
- Maximum t_{pd} of 5.9-ns at 3.3-V
- Low power consumption, 10-µA maximum I_{CC}
- ±24-mA output drive at 3.3-V
- Typical V_{OLP} (output ground bounce) < 0.8-V at V_{CC} = 3.3-V, T_A = 25°C
- Typical V_{OHV} (output V_{OH} undershoot) > 2-V at V_{CC} = 3.3 V, T_A = 25°C
- I_{off} supports live insertion, partial-power-down mode, and back-drive protection
- Latch-up performance exceeds 100 mA per JESD 78, class II
- ESD protection exceeds JESD 22
  - 2000-V human-body model
  - 200-V machine model
  - 1000-V charged-device model

2 Applications

- Servers
- LED displays
- Network switch
- Telecom infrastructure
- Motor drivers
- I/O expanders

3 Description

This single positive-edge-triggered D-type flip-flop is designed for 1.65-V to 5.5-V V_{CC} operation.

NanoFree™ package technology is a major breakthrough in IC packaging concepts, using the die as the package.

A low level at the preset ($\overline{PRE}$) or clear ($\overline{CLR}$) input sets or resets the outputs, regardless of the levels of the other inputs. When $\overline{PRE}$ and $\overline{CLR}$ are inactive (high), data at the data (D) input meeting the setup time requirements is transferred to the outputs on the positive-going edge of the clock pulse. Clock triggering occurs at a voltage level and is not related directly to the rise time of the clock pulse. Following the hold-time interval, data at the D input can be changed without affecting the levels at the outputs.

This device is fully specified for partial-power-down applications using I_{off}. The I_{off} circuitry disables the outputs, preventing damaging current backflow through the device when it is powered down.

Device Information

PART NUMBER	PACKAGE (1)	BODY SIZE
SN74LVC1G74	SM8 (8)	2.95 mm × 2.80 mm
	US8 (8)	2.30 mm × 2.00 mm
	X2SON (8)	1.40 mm × 1.00 mm
	UQFN (8)	1.50 mm × 1.50 mm

(1) For all available packages, see the orderable addendum at the end of the data sheet.

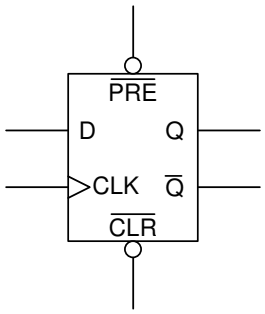

Simplified Schematic

An IMPORTANT NOTICE at the end of this data sheet addresses availability, warranty, changes, use in safety-critical applications, intellectual property matters and other important disclaimers. PRODUCTION DATA.

chanhvinh.com

Table of Contents

1 Features....1
2 Applications....1
3 Description....1
4 Revision History....2
5 Pin Configuration and Functions....4
6 Specifications....5
6.1 Absolute Maximum Ratings....5
6.2 ESD Ratings....5
6.3 Recommended Operating Conditions....6
6.4 Thermal Information....6
6.5 Electrical Characteristics....7
6.6 Timing Requirements....7
6.7 Switching Characteristics....7
6.8 Operating Characteristics....8
6.9 Typical Characteristics....8
7 Parameter Measurement Information....9
8 Detailed Description....10
8.1 Overview....10
8.2 Functional Block Diagram....10
8.3 Feature Description....10
8.4 Device Functional Modes....10
9 Application and Implementation....11
9.1 Application Information....11
9.2 Typical Power Button Circuit....11
10 Power Supply Recommendations....12
11 Layout....13
11.1 Layout Guidelines....13
11.2 Layout Example....13
12 Device and Documentation Support....14
12.1 Receiving Notification of Documentation Updates....14
12.2 Support Resources....14
12.3 Trademarks....14
12.4 Electrostatic Discharge Caution....14
12.5 Glossary....14
13 Mechanical, Packaging, and Orderable Information....14

4 Revision History

NOTE: Page numbers for previous revisions may differ from page numbers in the current version.

Changes from Revision F (April 2020) to Revision G (September 2021) — **Page**

- Updated the numbering format for tables, figures, and cross-references throughout the document....1
- Updated the *Application and Information* section....11
- Updated the *Device Power Button Circuit* figure *Typical Power Button Circuit* section....11

Changes from Revision E (Janurary 2015) to Revision F (April 2020) — **Page**

- Match RSE pinout with signal names....4

Changes from Revision D (January 2013) to Revision E (Janurary 2015) — **Page**

- Added *Applications*, *Device Information* table, *Pin Functions* table, *ESD Ratings* table, *Thermal Information* table, *Typical Characteristics*, *Feature Description* section, *Device Functional Modes*, *Application and Implementation* section, *Power Supply Recommendations* section, *Layout* section, *Device and Documentation Support* section, and *Mechanical, Packaging, and Orderable Information* section....1
- Deleted *Ordering Information* table....1
- Updated *Features* 1

Changes from Revision C (November 2012) to Revision D (January 2013) — **Page**

- Deleted Thermal data for DQE Package....1
- Added Thermal data for DQE Package....6

Changes from Revision B (March 2012) to Revision C (November 2012) — **Page**

- Added preview for RES part....1
- Added QFN package ordering information....14

Changes from Revision A (November 2011) to Revision B (February 2012) — **Page**

- Added SN74LVC1G74DCURG4 part number to ORDERING INFORMATION table....14

Changes from Revision * (October 2009) to Revision A (November 2011) — **Page**

- Changed I_{off} description in *Features* 1
- Changed temperature range for DCT and DCU package from (−40°C to 85°C) to (−40°C to 125°C)....6

Copyright © 2021 Texas Instruments Incorporated

chanhvinh.com

- Changed *Timing Requirements* table.....7
- Changed *Switching Requirements* table.....7

chanhvinh.com

chanhvinh.com

5 Pin Configuration and Functions

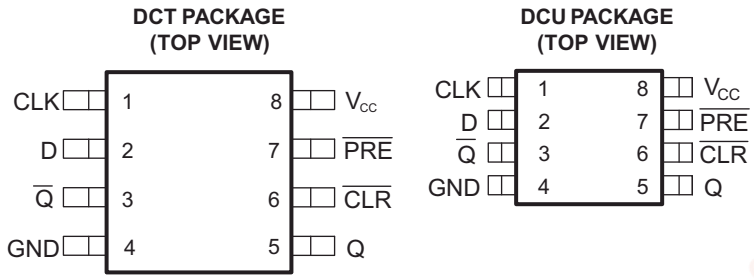

See mechanical drawings for dimensions.

Figure 5-1. DCT 8-Pin SM8 and DCU 8-Pin VSSOP Package Top View

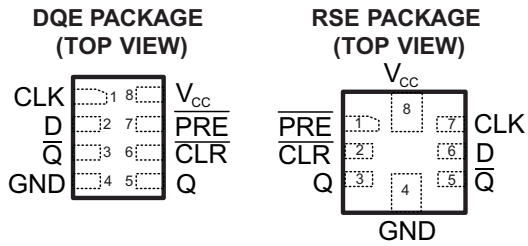

See mechanical drawings for dimensions

Figure 5-2. DQE 8-Pin X2SON and RSE UQFN 8-Pin Package Top View

Pin Functions

PIN		TYPE	DESCRIPTION
NAME	NO.		
CLK	1	I	Clock input
$\overline{CLR}$	6	I	Clear input − Pull low to set Q output low
D	2	I	Input
GND	4	—	Ground
$\overline{PRE}$	7	I	Preset input − Pull low to set Q output high
Q	5	O	Output
$\overline{Q}$	3	O	Inverted output
V_{CC}	8	—	Supply

Copyright © 2021 Texas Instruments Incorporated

chanhvinh.com

6 Specifications

6.1 Absolute Maximum Ratings

over operating free-air temperature range (unless otherwise noted)(1)

			MIN	MAX	UNIT
V_{CC}	Supply voltage range		–0.5	6.5	V
V_I	Input voltage range(2)		–0.5	6.5	V
V_O	Voltage range applied to any output in the high-impedance or power-off state(2)		–0.5	6.5	V
V_O	Voltage range applied to any output in the high or low state(2) (3)		–0.5	V_{CC} + 0.5	V
I_{IK}	Input clamp current	V_I < 0		–50	mA
I_{OK}	Output clamp current	V_O < 0		–50	mA
I_O	Continuous output current			±50	mA
	Continuous current through V_{CC} or GND			±100	mA
T_{stg}	Storage temperature range		–65	150	°C

(1) Stresses beyond those listed under *Absolute Maximum Ratings* may cause permanent damage to the device. These are stress ratings only, and functional operation of the device at these or any other conditions beyond those indicated under *Recommended Operating Conditions* is not implied. Exposure to absolute-maximum-rated conditions for extended periods may affect device reliability.
(2) The input negative-voltage and output voltage ratings may be exceeded if the input and output clamp-current ratings are observed.
(3) The value of V_{CC} is provided in the *Recommended Operating Conditions* table.

6.2 ESD Ratings

PARAMETER		DEFINITION	VALUE	UNIT
$V_{(ESD)}$	Electrostatic discharge	Human body model (HBM), per ANSI/ESDA/JEDEC JS-001, all pins(1)	2000	V
		Charged device model (CDM), per JEDEC specification JESD22-C101, all pins(2)	1000	

(1) JEDEC document JEP155 states that 500-V HBM allows safe manufacturing with a standard ESD control process.
(2) JEDEC document JEP157 states that 250-V CDM allows safe manufacturing with a standard ESD control process.

Copyright © 2021 Texas Instruments Incorporated

chanhvinh.com

6.3 Recommended Operating Conditions

over operating free-air temperature range (unless otherwise noted)(1)

			MIN	MAX	UNIT
V_{CC}	Supply voltage	Operating	1.65	5.5	V
		Data retention only	1.5		
V_{IH}	High-level input voltage	V_{CC} = 1.65 V to 1.95 V	0.65 × V_{CC}		V
		V_{CC} = 2.3 V to 2.7 V	1.7		
		V_{CC} = 3 V to 3.6 V	2		
		V_{CC} = 4.5 V to 5.5 V	0.7 × V_{CC}		
V_{IL}	Low-level input voltage	V_{CC} = 1.65 V to 1.95 V		0.35 × V_{CC}	V
		V_{CC} = 2.3 V to 2.7 V		0.7	
		V_{CC} = 3 V to 3.6 V		0.8	
		V_{CC} = 4.5 V to 5.5 V		0.3 × V_{CC}	
V_I	Input voltage		0	5.5	V
V_O	Output voltage		0	V_{CC}	V
I_{OH}	High-level output current	V_{CC} = 1.65 V		–4	mA
		V_{CC} = 2.3 V		–8	
		V_{CC} = 3 V		–16	
				–24	
		V_{CC} = 4.5 V		–32	
I_{OL}	Low-level output current	V_{CC} = 1.65 V		4	mA
		V_{CC} = 2.3 V		8	
		V_{CC} = 3 V		16	
				24	
		V_{CC} = 4.5 V		32	
Δt/Δv	Input transition rise or fall rate	V_{CC} = 1.8 V ± 0.15 V, 2.5 V ± 0.2 V		20	ns/V
		V_{CC} = 3.3 V ± 0.3 V		10	
		V_{CC} = 5 V ± 0.5 V		5	
T_A	Operating free-air temperature	RSE Package	–40	85	°C
		DQE Package			
		DCT Package	–40	125	
		DCU Package			

(1) All unused inputs of the device must be held at V_{CC} or GND to ensure proper device operation. Refer to the TI application report, *Implications of Slow or Floating CMOS Inputs*, literature number SCBA004.

6.4 Thermal Information

THERMAL METRIC(1)		SN74LVC1G74				UNIT
		DCT	DCU	RSE	DQE	
		8 PINS	8 PINS	8 PINS	8 PINS	
$R_{\theta JA}$	Junction-to-ambient thermal resistance	220	227	243	261	°C/W

(1) For more information about traditional and new thermal metrics, see the *IC Package Thermal Metrics* application report, SPRA953.

Copyright © 2021 Texas Instruments Incorporated

chanhvinh.com

6.5 Electrical Characteristics

over recommended operating free-air temperature range (unless otherwise noted)

PARAMETER		TEST CONDITIONS	V_{CC}	MIN	TYP(1)	MAX	UNIT
V_{OH}		I_{OH} = –100 µA	1.65 V to 5.5 V	V_{CC} – 0.1			V
		I_{OH} = –4 mA	1.65 V	1.2			
		I_{OH} = –8 mA	2.3 V	1.9			
		I_{OH} = –16 mA	3 V	2.4			
		I_{OH} = –24 mA		2.3			
		I_{OH} = –32 mA	4.5 V	3.8			
V_{OL}		I_{OL} = 100 µA	1.65 V to 5.5 V			0.1	V
		I_{OL} = 4 mA	1.65 V			0.45	
		I_{OL} = 8 mA	2.3 V			0.3	
		I_{OL} = 16 mA	3 V			0.4	
		I_{OL} = 24 mA				0.55	
		I_{OL} = 32 mA	4.5 V			0.55	
I_I	Data or control inputs	V_I = 5.5 V or GND	0 to 5.5 V			±5	µA
I_{off}		V_I or V_O = 5.5 V	0			±10	µA
I_{CC}		V_I = 5.5 V or GND, I_O = 0	1.65 V to 5.5 V			10	µA
ΔI_{CC}		One input at V_{CC} – 0.6 V, Other inputs at V_{CC} or GND	3 V to 5.5 V			500	µA
C_i		V_I = V_{CC} or GND	3.3 V		5		pF

(1) All typical values are at V_{CC} = 3.3 V, T_A = 25°C.

6.6 Timing Requirements

over recommended operating free-air temperature range (unless otherwise noted) (see Figure 7-1)

PARAMETER	FROM (INPUT)	TO (OUTPUT)	–40°C to 85°C								–40°C to 125°C				UNIT
			V_{CC} = 1.8 V		V_{CC} = 2.5 V		V_{CC} = 3.3 V		V_{CC} = 5 V		V_{CC} = 3.3 V		V_{CC} = 5 V		
			MIN	MAX	MIN	MAX	MIN	MAX	MIN	MAX	MIN	MAX	MIN	MAX	
f_{clock}				80		175		175		200		175		200	MHz
t_w	CLK		6.2		2.7		2.7		2		2.7		2		ns
	$\overline{PRE}$ or $\overline{CLR}$ low		6.2		2.7		2.7		2		2.7		2		
t_{su}	Data		2.9		1.7		1.3		1.1		1.3		1.1		ns
	$\overline{PRE}$ or $\overline{CLR}$ inactive		1.9		1.4		1.2		1		1.2		1.2		
t_h			0		0.3		1.2		0.5		1.2		0.5		ns

6.7 Switching Characteristics

over recommended operating free-air temperature range (unless otherwise noted) (see Figure 7-1)

PARAMETER	FROM (INPUT)	TO (OUTPUT)	–40°C to 85°C								–40°C to 125°C				UNIT
			V_{CC} = 1.8 V		V_{CC} = 2.5 V		V_{CC} = 3.3 V		V_{CC} = 5 V		V_{CC} = 3.3 V		V_{CC} = 5 V		
			MIN	MAX	MIN	MAX	MIN	MAX	MIN	MAX	MIN	MAX	MIN	MAX	
f_{max}			80		175		175		200		175		200		MHz
t_{pd}	CLK	Q	4.8	13.4	2.2	7.1	2.2	5.9	1.4	4.1	2.2	7.9	1.4	6.1	ns
		$\overline{Q}$	6	14.4	3	7.7	2.6	6.2	1.6	4.4	2.6	8.2	1.6	6.4	
	$\overline{PRE}$ or $\overline{CLR}$ low	Q or Q	4.4	12.9	2.3	7	1.7	5.9	1.6	4.1	1.7	7.9	1.6	6.1	

Copyright © 2021 Texas Instruments Incorporated

chanhvinh.com

6.8 Operating Characteristics

T_A = 25°C

PARAMETER		TEST CONDITIONS	V_{CC} = 1.8 V	V_{CC} = 2.5 V	V_{CC} = 3.3 V	V_{CC} = 5 V	UNIT
			TYP	TYP	TYP	TYP	
C_{pd}	Power dissipation capacitance	f = 10 MHz	35	35	37	40	pF

6.9 Typical Characteristics

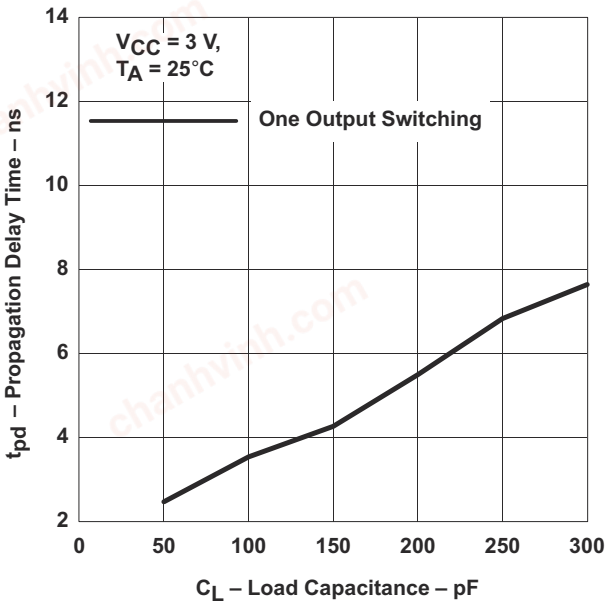

Figure 6-1. Propagation Delay (Low to High Transition) vs Load Capacitance

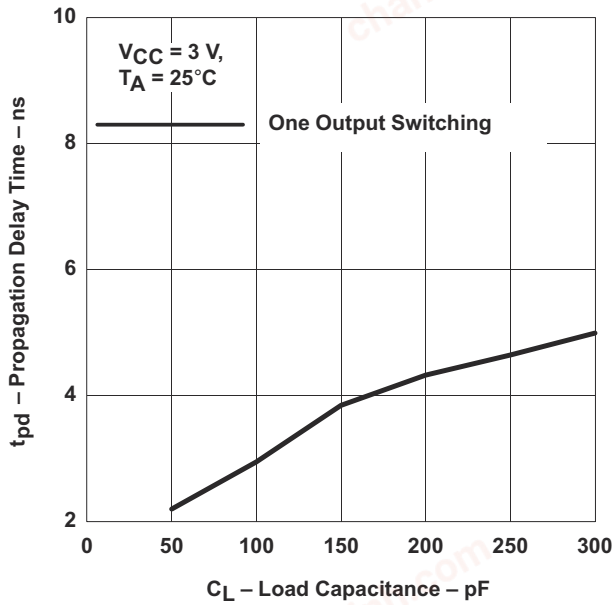

Figure 6-2. Propagation Delay (High to Low Transition) vs Load Capacitance

Copyright © 2021 Texas Instruments Incorporated

chanhvinh.com

7 Parameter Measurement Information

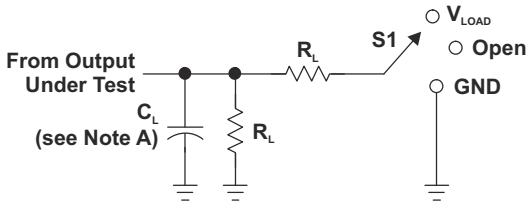

LOAD CIRCUIT

TEST	S1
t_{PLH}/t_{PHL}	Open
t_{PLZ}/t_{PZL}	V_{LOAD}
t_{PHZ}/t_{PZH}	GND

V_{CC}	INPUTS		V_M	V_{LOAD}	C_L	R_L	V_Δ
	V_I	t_r/t_f					
1.8 V ± 0.15 V	V_{CC}	≤2 ns	$V_{CC}/2$	2 × V_{CC}	30 pF	1 kΩ	0.15 V
2.5 V ± 0.2 V	V_{CC}	≤2 ns	$V_{CC}/2$	2 × V_{CC}	30 pF	500 Ω	0.15 V
3.3 V ± 0.3 V	3 V	≤2.5 ns	1.5 V	6 V	50 pF	500 Ω	0.3 V
5 V ± 0.5 V	V_{CC}	≤2.5 ns	$V_{CC}/2$	2 × V_{CC}	50 pF	500 Ω	0.3 V

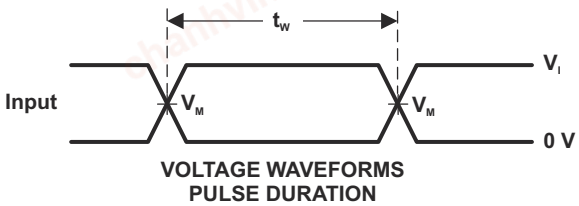

VOLTAGE WAVEFORMS
PULSE DURATION

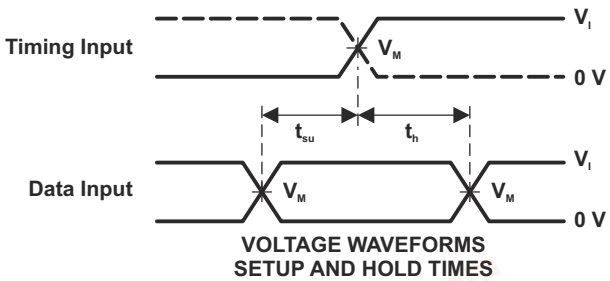

VOLTAGE WAVEFORMS
SETUP AND HOLD TIMES

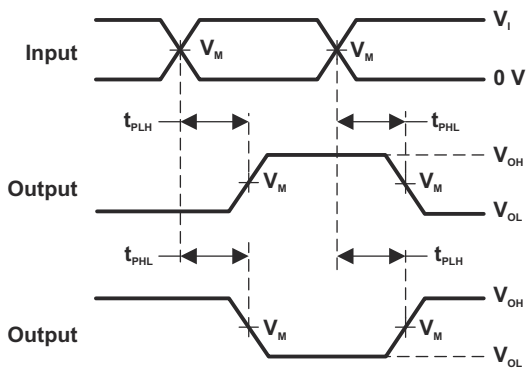

VOLTAGE WAVEFORMS
PROPAGATION DELAY TIMES
INVERTING AND NONINVERTING OUTPUTS

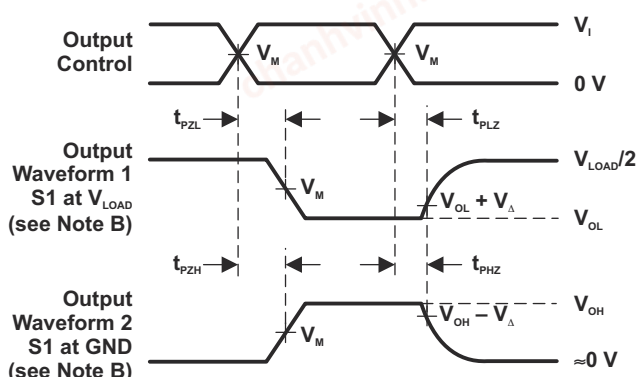

VOLTAGE WAVEFORMS
ENABLE AND DISABLE TIMES
LOW- AND HIGH-LEVEL ENABLING

NOTES: A. C_L includes probe and jig capacitance.
B. Waveform 1 is for an output with internal conditions such that the output is low, except when disabled by the output control. Waveform 2 is for an output with internal conditions such that the output is high, except when disabled by the output control.
C. All input pulses are supplied by generators having the following characteristics: PRR ≤ 10 MHz, Z_O = 50 Ω.
D. The outputs are measured one at a time, with one transition per measurement.
E. t_{PLZ} and t_{PHZ} are the same as t_{dis}.
F. t_{PZL} and t_{PZH} are the same as t_{en}.
G. t_{PLH} and t_{PHL} are the same as t_{pd}.
H. All parameters and waveforms are not applicable to all devices.

Figure 7-1. Load Circuit and Voltage Waveforms

Copyright © 2021 Texas Instruments Incorporated

chanhvinh.com

8 Detailed Description

8.1 Overview

This device is fully specified for partial-power-down applications using I_{off}. The I_{off} circuitry disables the outputs, preventing damaging current backflow through the device when it is powered down.

8.2 Functional Block Diagram

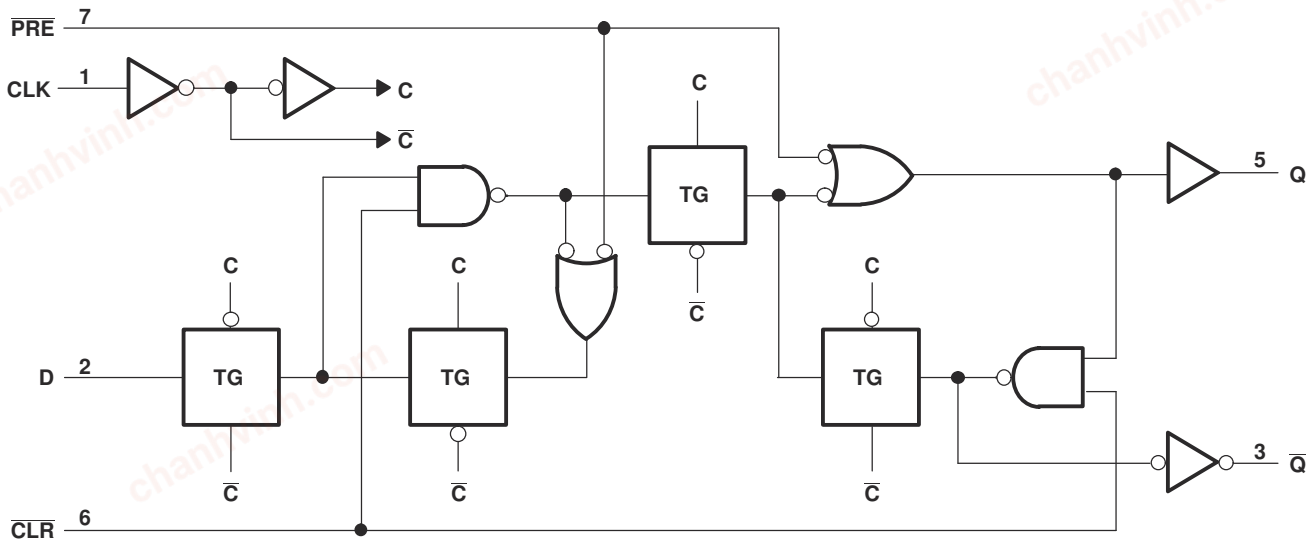

8.3 Feature Description

- Allow down voltage translation
  - 5-V to 3.3-V
  - 5.0-V to 1.8-V
  - 3.3-V to 1.8-V
- Inputs accept voltage levels up to 5.5-V
- I_{off} Feature
  - Can prevent backflow current that can damage device when powered down

8.4 Device Functional Modes

Table 8-1. Function Table

INPUTS				OUTPUTS	
$\overline{PRE}$	$\overline{CLR}$	CLK	D	Q	$\overline{Q}$
L	H	X	X	H	L
H	L	X	X	L	H
L	L	X	X	H(1)	H(1)
H	H	↑	H	H	L
H	H	↑	L	L	H
H	H	L	X	Q_0	$\overline{Q}_0$

(1) This configuration is nonstable; that is, it does not persist when $\overline{PRE}$ or $\overline{CLR}$ returns to its inactive (high) level.

Copyright © 2021 Texas Instruments Incorporated

chanhvinh.com

9 Application and Implementation

Note

Information in the following applications sections is not part of the TI component specification, and TI does not warrant its accuracy or completeness. TI's customers are responsible for determining suitability of components for their purposes, as well as validating and testing their design implementation to confirm system functionality.

9.1 Application Information

A low level at the preset ($\overline{PRE}$) or clear ($\overline{CLR}$) input sets or resets the outputs, regardless of the levels of the other inputs. When $\overline{PRE}$ and $\overline{CLR}$ are inactive (high), data at the data (D) input meeting the setup time requirements is transferred to the outputs on the positive-going edge of the clock pulse. Clock triggering occurs at a voltage level and is not related directly to the rise time of the clock pulse. Following the hold-time interval, data at the D input can be changed without affecting the levels at the outputs.

The 330 Ω resistor and 22 pF capacitor shown in Figure 9-1 produce enough delay to meet the hold time requirement of the D input. To calculate the delay for a particular RC combination, use Equation 1. The delay with this RC combination is 5.03 ns

$$t_{delay} = -RC \ln(0.5) \approx 0.693\ RC \quad (1)$$

To ensure proper operation, check that the transition time of the RC circuit meets the transition time requirements of the device inputs listed in the Recommended Operating Conditions table. Transition time for an RC can be approximated with Equation 2.

$$t_t \approx 2.2\ RC \quad (2)$$

9.2 Typical Power Button Circuit

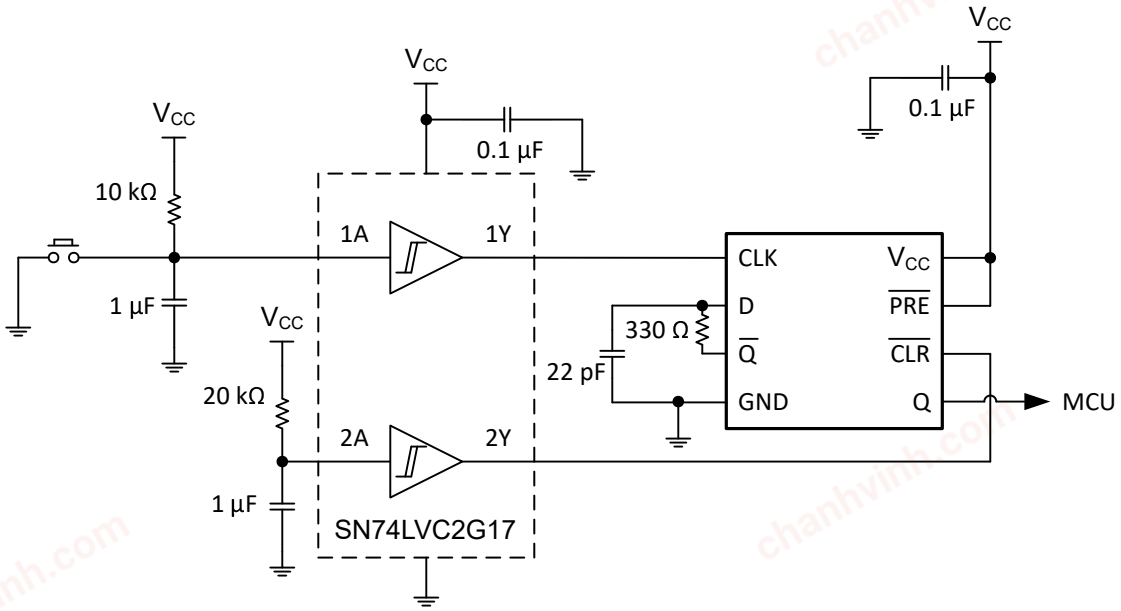

Figure 9-1. Device Power Button Circuit

chanhvinh.com

9.2.1 Design Requirements

This device uses CMOS technology and has balanced output drive. Care should be taken to avoid bus contention because it can drive currents that would exceed maximum limits. Outputs can be combined to produce higher drive but the high drive will also create faster edges into light loads so routing and load conditions should be considered to prevent ringing.

9.2.2 Detailed Design Procedure

1. Recommended Input Conditions:
   - For rise time and fall time specifications, see (Δt/ΔV) in the *Recommended Operating Conditions* table.
   - For specified high and low levels, see (V_{IH} and V_{IL}) in the *Recommended Operating Conditions* table.
   - Inputs are overvoltage tolerant allowing them to go as high as 5.5-V at any valid V_{CC}.
2. Recommend Output Conditions:
   - Load currents should not exceed 50-mA per output and 100-mA total for the part.
   - Series resistors on the output may be used if the user desires to slow the output edge signal or limit the output current.

9.2.3 Application Curves

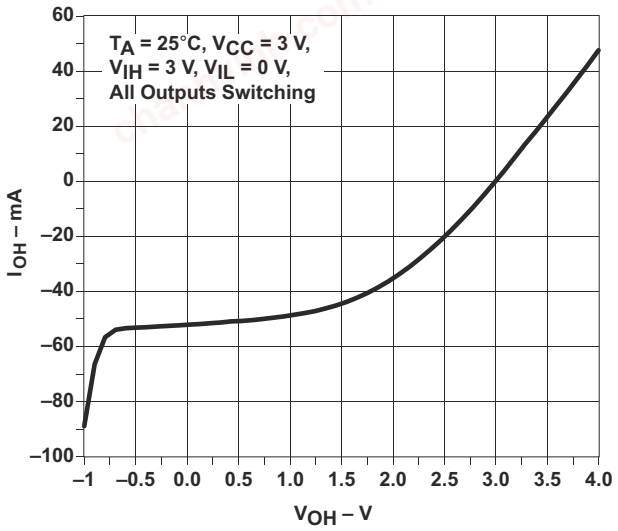

Figure 9-2. Output Current Drive vs HIGH-level Output Voltage

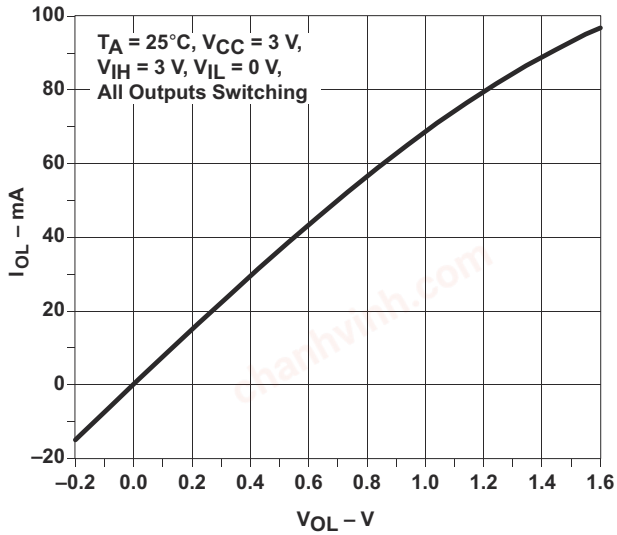

Figure 9-3. Output Current Drive vs LOW-level Output Voltage

10 Power Supply Recommendations

The power supply can be any voltage between the minimum and maximum supply voltage rating located in the *Recommonded Operating Conditions* table. Each V_{CC} terminal should have a good bypass capacitor to prevent power disturbance. For devices with a single supply, a 0.1-μF capacitor is recommended and if there are multiple V_{CC} terminals then .01-μF or .022-μF capacitors are recommended for each power terminal. It is acceptable to parallel multiple bypass caps to reject different frequencies of noise. The 0.1-μF and 1-μF capacitors are commonly used in parallel. The bypass capacitor should be installed as close to the power terminal as possible for best results.

Copyright © 2021 Texas Instruments Incorporated

chanhvinh.com

11 Layout

11.1 Layout Guidelines

When using multiple bit logic devices, inputs should not float. In many cases, functions or parts of functions of digital logic devices are unused. Some examples are when only two inputs of a triple-input AND gate are used, or when only 3 of the 4-buffer gates are used. Such input pins should not be left unconnected because the undefined voltages at the outside connections result in undefined operational states.

Specified in Figure 11-1 are rules that must be observed under all circumstances. All unused inputs of digital logic devices must be connected to a high or low bias to prevent them from floating. The logic level that should be applied to any particular unused input depends on the function of the device. Generally they will be tied to GND or V_{CC}, whichever makes more sense or is more convenient. It is acceptable to float outputs unless the part is a transceiver. If the transceiver has an output enable pin, it will disable the outputs section of the part when asserted. This will not disable the input section of the I/Os so they also cannot float when disabled.

11.2 Layout Example

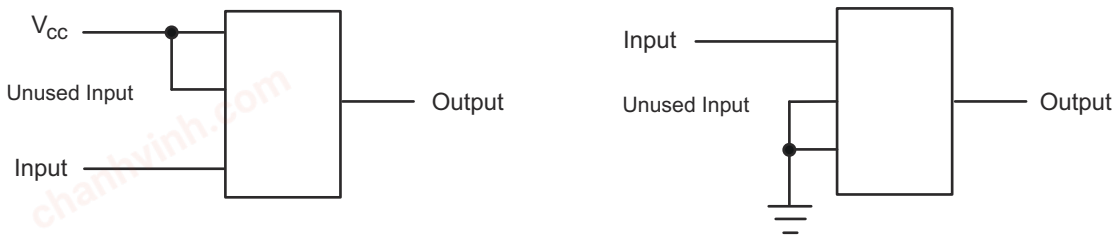

Figure 11-1. Layout Diagram

chanhvinh.com

12 Device and Documentation Support

12.1 Receiving Notification of Documentation Updates

To receive notification of documentation updates, navigate to the device product folder on ti.com. Click on *Subscribe to updates* to register and receive a weekly digest of any product information that has changed. For change details, review the revision history included in any revised document.

12.2 Support Resources

TI E2E™ support forums are an engineer's go-to source for fast, verified answers and design help — straight from the experts. Search existing answers or ask your own question to get the quick design help you need.

Linked content is provided "AS IS" by the respective contributors. They do not constitute TI specifications and do not necessarily reflect TI's views; see TI's Terms of Use.

12.3 Trademarks

NanoFree™ is a trademark of Texas Instruments.
TI E2E™ is a trademark of Texas Instruments.
All trademarks are the property of their respective owners.

12.4 Electrostatic Discharge Caution



This integrated circuit can be damaged by ESD. Texas Instruments recommends that all integrated circuits be handled with appropriate precautions. Failure to observe proper handling and installation procedures can cause damage.

ESD damage can range from subtle performance degradation to complete device failure. Precision integrated circuits may be more susceptible to damage because very small parametric changes could cause the device not to meet its published specifications.

12.5 Glossary

TI Glossary	This glossary lists and explains terms, acronyms, and definitions.

13 Mechanical, Packaging, and Orderable Information

The following pages include mechanical packaging and orderable information. This information is the most current data available for the designated devices. This data is subject to change without notice and revision of this document. For browser based versions of this data sheet, refer to the left hand navigation.

Copyright © 2021 Texas Instruments Incorporated

chanhvinh.com

PACKAGING INFORMATION

Orderable part number	Status (1)	Material type (2)	Package | Pins	Package qty | Carrier	RoHS (3)	Lead finish/ Ball material (4)	MSL rating/ Peak reflow (5)	Op temp (°C)	Part marking (6)
SN74LVC1G74DCTR	Active	Production	SSOP (DCT) | 8	3000 | LARGE T&R	Yes	SN	Level-1-260C-UNLIM	-40 to 125	(2WE5, N74) Z
SN74LVC1G74DCTR.B	Active	Production	SSOP (DCT) | 8	3000 | LARGE T&R	Yes	SN	Level-1-260C-UNLIM	-40 to 125	(2WE5, N74) Z
SN74LVC1G74DCUR	Active	Production	VSSOP (DCU) | 8	3000 | LARGE T&R	Yes	NIPDAU | SN	Level-1-260C-UNLIM	-40 to 125	(N74J, N74Q, N74R)
SN74LVC1G74DCUR.B	Active	Production	VSSOP (DCU) | 8	3000 | LARGE T&R	Yes	SN	Level-1-260C-UNLIM	-40 to 125	(N74J, N74Q, N74R)
SN74LVC1G74DCURG4	Active	Production	VSSOP (DCU) | 8	3000 | LARGE T&R	Yes	NIPDAU	Level-1-260C-UNLIM	-40 to 125	N74R
SN74LVC1G74DCURG4.B	Active	Production	VSSOP (DCU) | 8	3000 | LARGE T&R	Yes	NIPDAU	Level-1-260C-UNLIM	-40 to 125	N74R
SN74LVC1G74DCUT	Active	Production	VSSOP (DCU) | 8	250 | SMALL T&R	Yes	NIPDAU | SN	Level-1-260C-UNLIM	-40 to 125	(N74J, N74Q, N74R)
SN74LVC1G74DCUT.B	Active	Production	VSSOP (DCU) | 8	250 | SMALL T&R	Yes	SN	Level-1-260C-UNLIM	-40 to 125	(N74J, N74Q, N74R)
SN74LVC1G74DQER	Active	Production	X2SON (DQE) | 8	5000 | LARGE T&R	Yes	NIPDAU	Level-1-260C-UNLIM	-40 to 125	DP
SN74LVC1G74DQER.B	Active	Production	X2SON (DQE) | 8	5000 | LARGE T&R	Yes	NIPDAU	Level-1-260C-UNLIM	-40 to 125	DP
SN74LVC1G74DQERG4	Active	Production	X2SON (DQE) | 8	5000 | LARGE T&R	Yes	NIPDAU	Level-1-260C-UNLIM	-40 to 125	DP
SN74LVC1G74DQERG4.B	Active	Production	X2SON (DQE) | 8	5000 | LARGE T&R	Yes	NIPDAU	Level-1-260C-UNLIM	-40 to 125	DP
SN74LVC1G74RSE2	Active	Production	UQFN (RSE) | 8	5000 | LARGE T&R	Yes	NIPDAU	Level-1-260C-UNLIM	-40 to 125	DP
SN74LVC1G74RSE2.B	Active	Production	UQFN (RSE) | 8	5000 | LARGE T&R	Yes	NIPDAU	Level-1-260C-UNLIM	-40 to 125	DP
SN74LVC1G74RSE2G4	Active	Production	UQFN (RSE) | 8	5000 | LARGE T&R	Yes	NIPDAU	Level-1-260C-UNLIM	-40 to 125	DP
SN74LVC1G74RSE2G4.B	Active	Production	UQFN (RSE) | 8	5000 | LARGE T&R	Yes	NIPDAU	Level-1-260C-UNLIM	-40 to 125	DP
SN74LVC1G74RSER	Active	Production	UQFN (RSE) | 8	5000 | LARGE T&R	Yes	NIPDAU	Level-1-260C-UNLIM	-40 to 125	DP
SN74LVC1G74RSER.B	Active	Production	UQFN (RSE) | 8	5000 | LARGE T&R	Yes	NIPDAU	Level-1-260C-UNLIM	-40 to 125	DP
SN74LVC1G74RSERG4	Active	Production	UQFN (RSE) | 8	5000 | LARGE T&R	Yes	NIPDAU	Level-1-260C-UNLIM	-40 to 125	DP
SN74LVC1G74RSERG4.B	Active	Production	UQFN (RSE) | 8	5000 | LARGE T&R	Yes	NIPDAU	Level-1-260C-UNLIM	-40 to 125	DP

(1) **Status:** For more details on status, see our product life cycle.

(2) **Material type:** When designated, preproduction parts are prototypes/experimental devices, and are not yet approved or released for full production. Testing and final process, including without limitation quality assurance, reliability performance testing, and/or process qualification, may not yet be complete, and this item is subject to further changes or possible discontinuation. If available for ordering, purchases will be subject to an additional waiver at checkout, and are intended for early internal evaluation purposes only. These items are sold without warranties of any kind.

chanhvinh.com

(3) RoHS values: Yes, No, RoHS Exempt. See the TI RoHS Statement for additional information and value definition.

(4) Lead finish/Ball material: Parts may have multiple material finish options. Finish options are separated by a vertical ruled line. Lead finish/Ball material values may wrap to two lines if the finish value exceeds the maximum column width.

(5) MSL rating/Peak reflow: The moisture sensitivity level ratings and peak solder (reflow) temperatures. In the event that a part has multiple moisture sensitivity ratings, only the lowest level per JEDEC standards is shown. Refer to the shipping label for the actual reflow temperature that will be used to mount the part to the printed circuit board.

(6) Part marking: There may be an additional marking, which relates to the logo, the lot trace code information, or the environmental category of the part.

Multiple part markings will be inside parentheses. Only one part marking contained in parentheses and separated by a "~" will appear on a part. If a line is indented then it is a continuation of the previous line and the two combined represent the entire part marking for that device.

Important Information and Disclaimer: The information provided on this page represents TI's knowledge and belief as of the date that it is provided. TI bases its knowledge and belief on information provided by third parties, and makes no representation or warranty as to the accuracy of such information. Efforts are underway to better integrate information from third parties. TI has taken and continues to take reasonable steps to provide representative and accurate information but may not have conducted destructive testing or chemical analysis on incoming materials and chemicals. TI and TI suppliers consider certain information to be proprietary, and thus CAS numbers and other limited information may not be available for release.

In no event shall TI's liability arising out of such information exceed the total purchase price of the TI part(s) at issue in this document sold by TI to Customer on an annual basis.

chanhvinh.com

PACKAGE MATERIALS INFORMATION

TAPE AND REEL INFORMATION

REEL DIMENSIONS

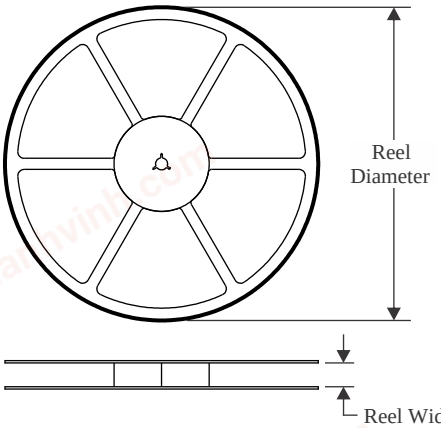

TAPE DIMENSIONS

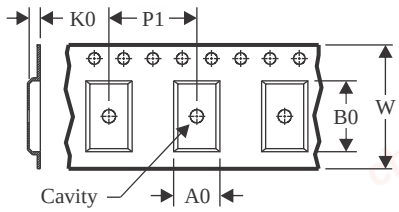

A0	Dimension designed to accommodate the component width
B0	Dimension designed to accommodate the component length
K0	Dimension designed to accommodate the component thickness
W	Overall width of the carrier tape
P1	Pitch between successive cavity centers

QUADRANT ASSIGNMENTS FOR PIN 1 ORIENTATION IN TAPE

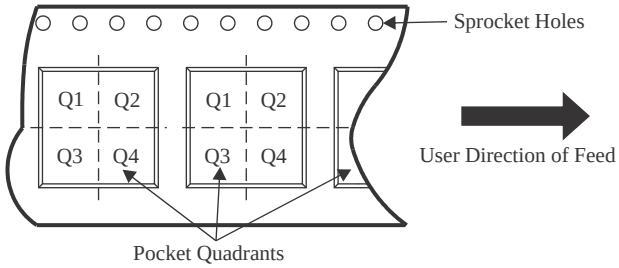

*All dimensions are nominal

Device	Package Type	Package Drawing	Pins	SPQ	Reel Diameter (mm)	Reel Width W1 (mm)	A0 (mm)	B0 (mm)	K0 (mm)	P1 (mm)	W (mm)	Pin1 Quadrant
SN74LVC1G74DCTR	SSOP	DCT	8	3000	180.0	12.4	3.15	4.35	1.55	4.0	12.0	Q3
SN74LVC1G74DCUR	VSSOP	DCU	8	3000	180.0	8.4	2.25	3.35	1.05	4.0	8.0	Q3
SN74LVC1G74DCUR	VSSOP	DCU	8	3000	178.0	9.0	2.25	3.35	1.05	4.0	8.0	Q3
SN74LVC1G74DCUR	VSSOP	DCU	8	3000	178.0	9.5	2.25	3.35	1.05	4.0	8.0	Q3
SN74LVC1G74DCURG4	VSSOP	DCU	8	3000	180.0	8.4	2.25	3.35	1.05	4.0	8.0	Q3
SN74LVC1G74DCUT	VSSOP	DCU	8	250	178.0	9.0	2.25	3.35	1.05	4.0	8.0	Q3
SN74LVC1G74DCUT	VSSOP	DCU	8	250	180.0	8.4	2.25	3.35	1.05	4.0	8.0	Q3
SN74LVC1G74DCUT	VSSOP	DCU	8	250	178.0	9.5	2.25	3.35	1.05	4.0	8.0	Q3
SN74LVC1G74DQER	X2SON	DQE	8	5000	180.0	9.5	1.15	1.6	0.5	4.0	8.0	Q1
SN74LVC1G74DQERG4	X2SON	DQE	8	5000	180.0	9.5	1.15	1.6	0.5	4.0	8.0	Q1
SN74LVC1G74RSE2	UQFN	RSE	8	5000	180.0	9.5	1.7	1.7	0.75	4.0	8.0	Q3
SN74LVC1G74RSE2G4	UQFN	RSE	8	5000	180.0	9.5	1.7	1.7	0.75	4.0	8.0	Q3
SN74LVC1G74RSER	UQFN	RSE	8	5000	180.0	9.5	1.7	1.7	0.75	4.0	8.0	Q2
SN74LVC1G74RSERG4	UQFN	RSE	8	5000	180.0	9.5	1.7	1.7	0.75	4.0	8.0	Q2

chanhvinh.com

PACKAGE MATERIALS INFORMATION

TAPE AND REEL BOX DIMENSIONS

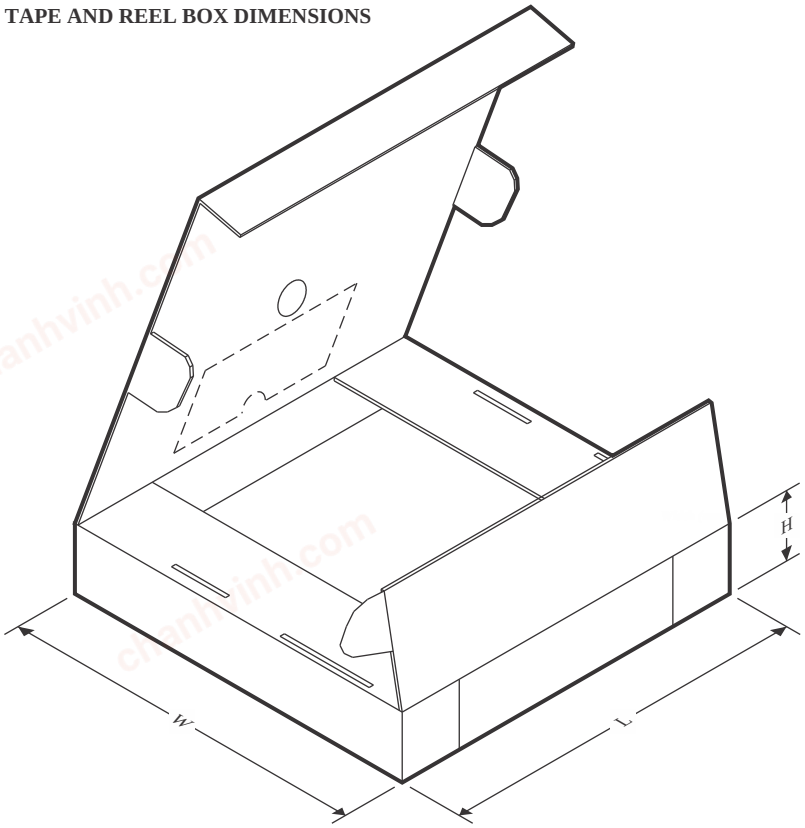

*All dimensions are nominal

Device	Package Type	Package Drawing	Pins	SPQ	Length (mm)	Width (mm)	Height (mm)
SN74LVC1G74DCTR	SSOP	DCT	8	3000	190.0	190.0	30.0
SN74LVC1G74DCUR	VSSOP	DCU	8	3000	202.0	201.0	28.0
SN74LVC1G74DCUR	VSSOP	DCU	8	3000	180.0	180.0	18.0
SN74LVC1G74DCUR	VSSOP	DCU	8	3000	202.0	201.0	28.0
SN74LVC1G74DCURG4	VSSOP	DCU	8	3000	202.0	201.0	28.0
SN74LVC1G74DCUT	VSSOP	DCU	8	250	180.0	180.0	18.0
SN74LVC1G74DCUT	VSSOP	DCU	8	250	202.0	201.0	28.0
SN74LVC1G74DCUT	VSSOP	DCU	8	250	202.0	201.0	28.0
SN74LVC1G74DQER	X2SON	DQE	8	5000	184.0	184.0	19.0
SN74LVC1G74DQERG4	X2SON	DQE	8	5000	184.0	184.0	19.0
SN74LVC1G74RSE2	UQFN	RSE	8	5000	184.0	184.0	19.0
SN74LVC1G74RSE2G4	UQFN	RSE	8	5000	184.0	184.0	19.0
SN74LVC1G74RSER	UQFN	RSE	8	5000	184.0	184.0	19.0
SN74LVC1G74RSERG4	UQFN	RSE	8	5000	184.0	184.0	19.0

chanhvinh.com

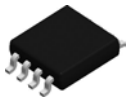

PACKAGE OUTLINE

DCT0008A

SSOP - 1.3 mm max height

SMALL OUTLINE PACKAGE

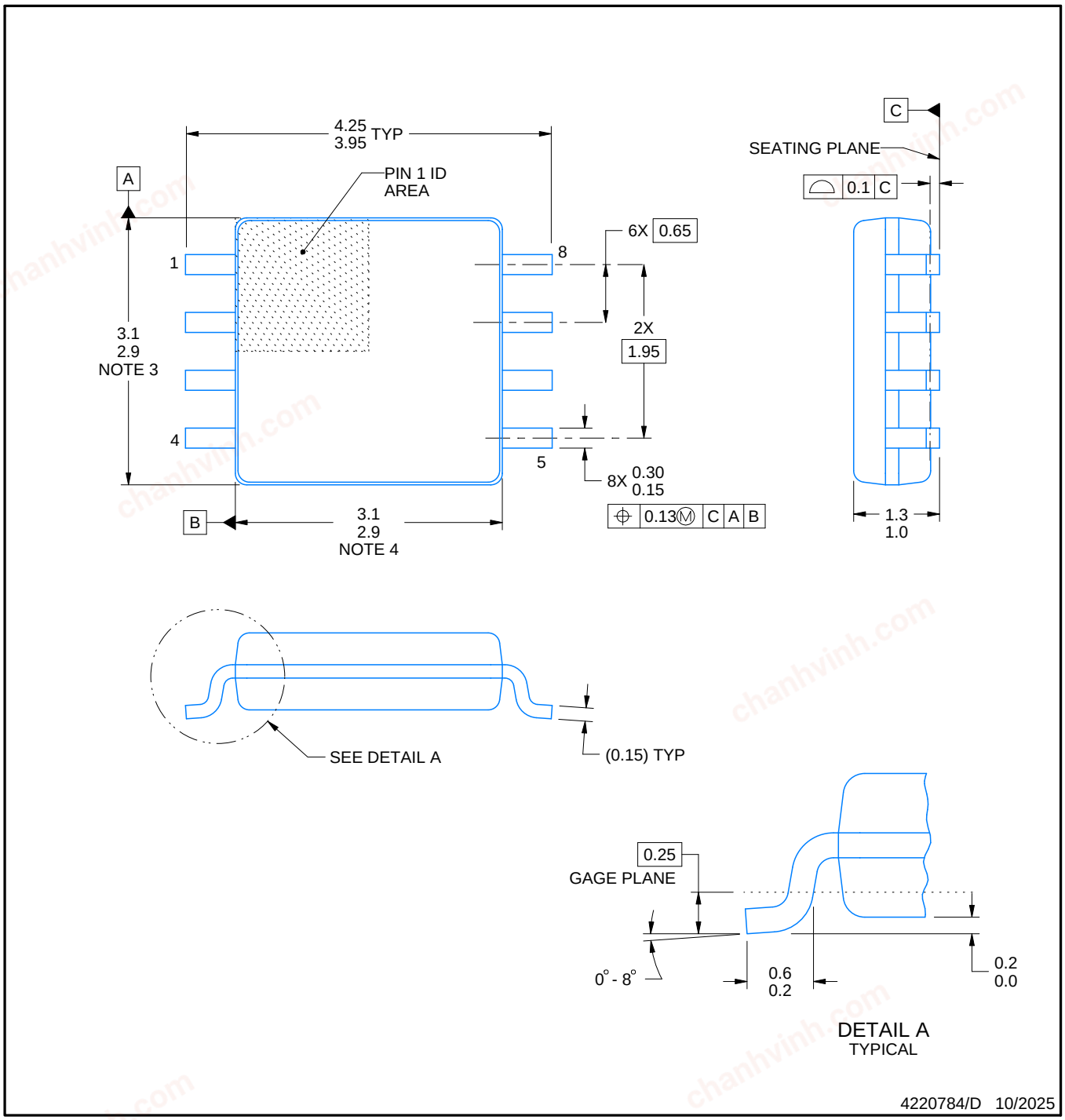

NOTES:

1. All linear dimensions are in millimeters. Dimensions in parenthesis are for reference only. Dimensioning and tolerancing per ASME Y14.5M.
2. This drawing is subject to change without notice.
3. This dimension does not include mold flash, protrusions, or gate burrs. Mold flash, protrusions, or gate burrs shall not exceed 0.15 mm per side.
4. This dimension does not include interlead flash. Interlead flash shall not exceed 0.25 mm per side.

chanhvinh.com

EXAMPLE BOARD LAYOUT

DCT0008A

SSOP - 1.3 mm max height

SMALL OUTLINE PACKAGE

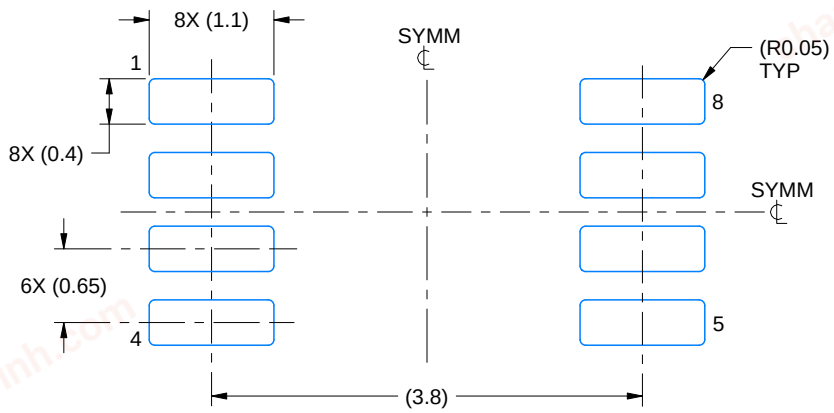

LAND PATTERN EXAMPLE
EXPOSED METAL SHOWN
SCALE:15X

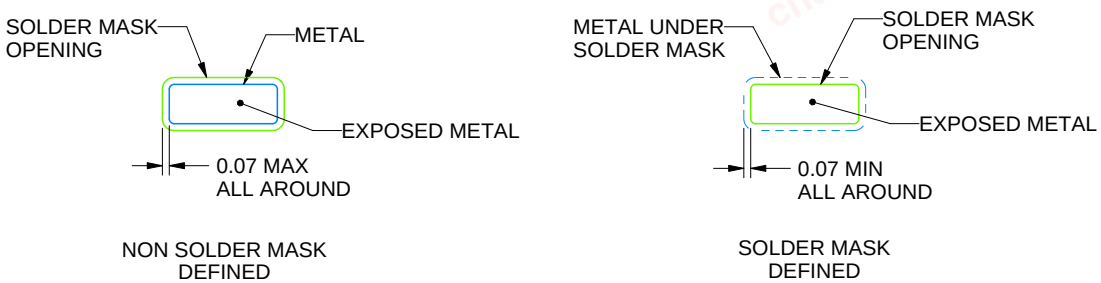

SOLDER MASK DETAILS

4220784/D 10/2025

NOTES: (continued)

5. Publication IPC-7351 may have alternate designs.
6. Solder mask tolerances between and around signal pads can vary based on board fabrication site.

chanhvinh.com

EXAMPLE STENCIL DESIGN

DCT0008A

SSOP - 1.3 mm max height

SMALL OUTLINE PACKAGE

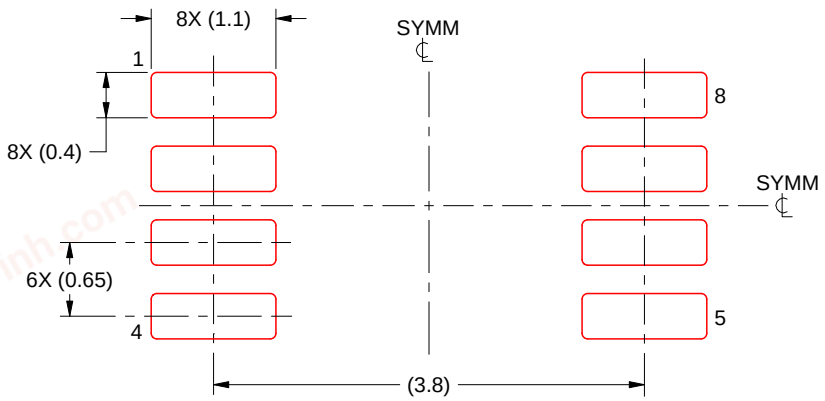

SOLDER PASTE EXAMPLE
BASED ON 0.125 mm THICK STENCIL
SCALE:15X

4220784/D 10/2025

NOTES: (continued)

7. Laser cutting apertures with trapezoidal walls and rounded corners may offer better paste release. IPC-7525 may have alternate design recommendations.
8. Board assembly site may have different recommendations for stencil design.

chanhvinh.com



PACKAGE OUTLINE

DCU0008A

VSSOP - 0.9 mm max height

SMALL OUTLINE PACKAGE

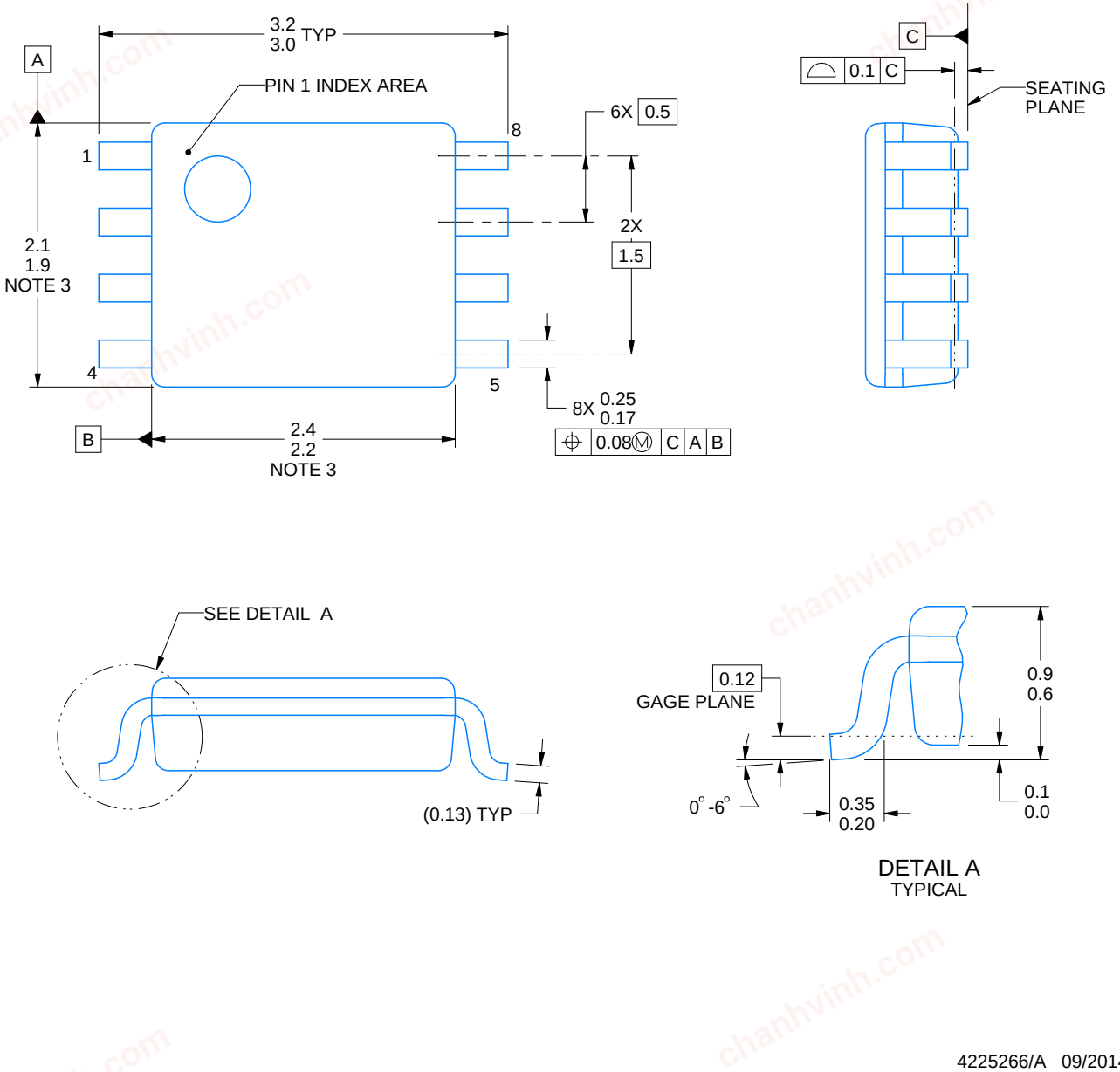

NOTES:

1. All linear dimensions are in millimeters. Any dimensions in parenthesis are for reference only. Dimensioning and tolerancing per ASME Y14.5M.
2. This drawing is subject to change without notice.
3. This dimension does not include mold flash, protrusions, or gate burrs. Mold flash, protrusions, or gate burrs shall not exceed 0.15 mm per side.
4. Reference JEDEC registration MO-187 variation CA.

chanhvinh.com

EXAMPLE BOARD LAYOUT

DCU0008A

VSSOP - 0.9 mm max height

SMALL OUTLINE PACKAGE

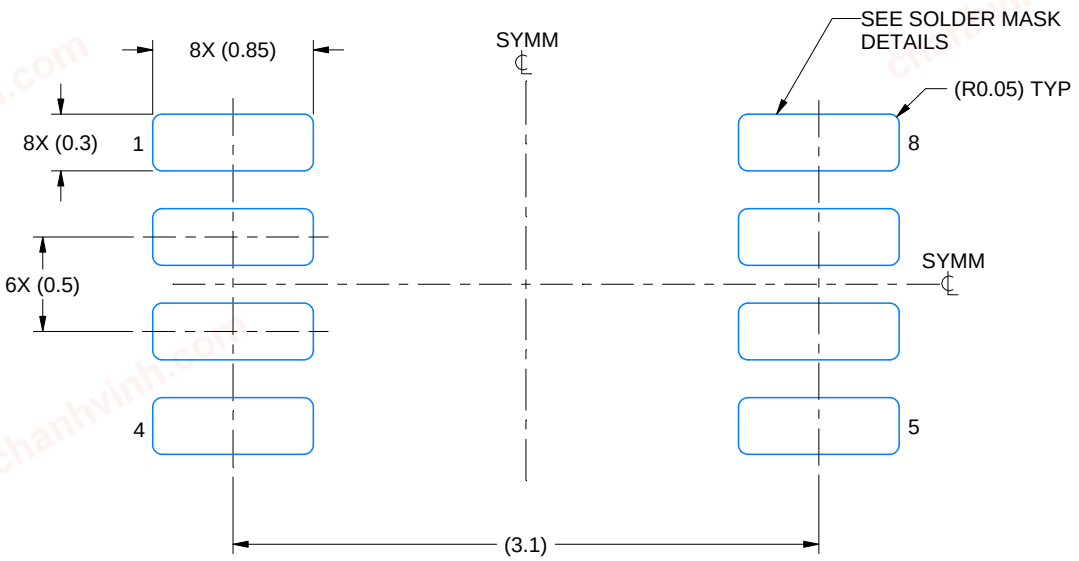

LAND PATTERN EXAMPLE
EXPOSED METAL SHOWN
SCALE: 25X

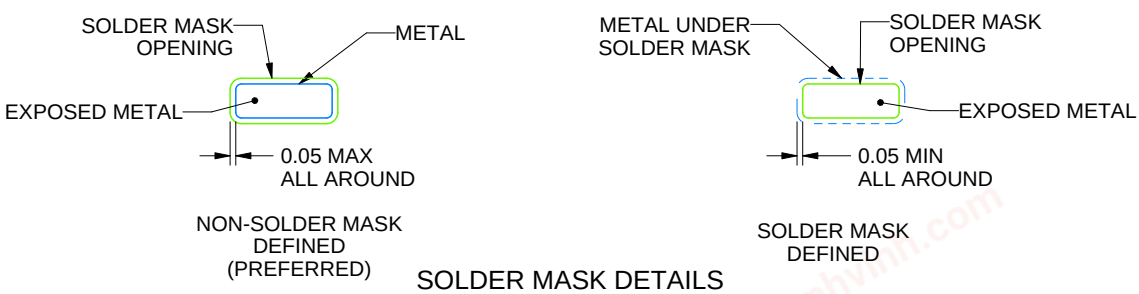

SOLDER MASK DETAILS

4225266/A 09/2014

NOTES: (continued)

5. Publication IPC-7351 may have alternate designs.
6. Solder mask tolerances between and around signal pads can vary based on board fabrication site.

chanhvinh.com

EXAMPLE STENCIL DESIGN

DCU0008A

VSSOP - 0.9 mm max height

SMALL OUTLINE PACKAGE

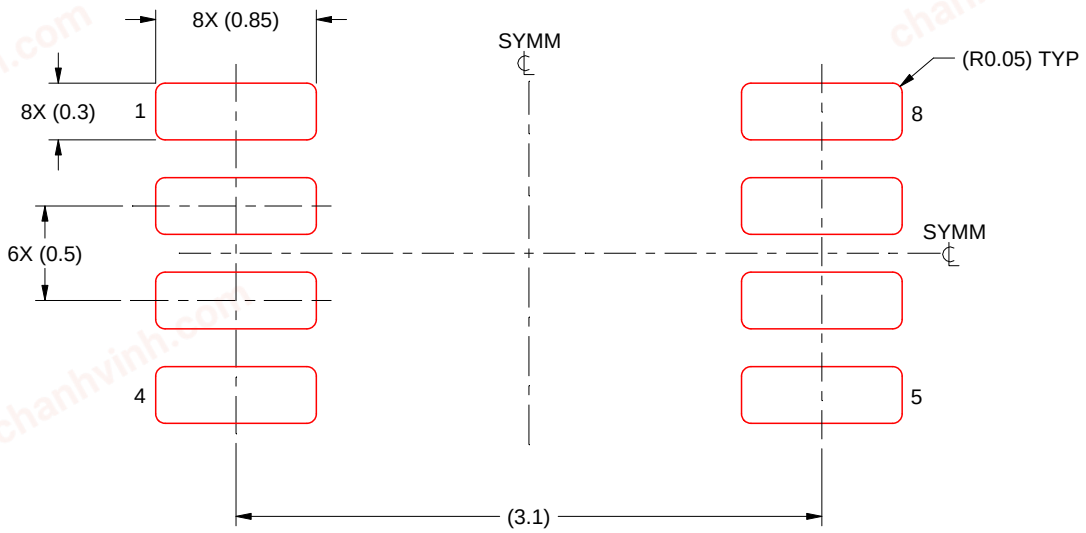

SOLDER PASTE EXAMPLE
BASED ON 0.125 mm THICK STENCIL
SCALE: 25X

4225266/A 09/2014

NOTES: (continued)

7. Laser cutting apertures with trapezoidal walls and rounded corners may offer better paste release. IPC-7525 may have alternate design recommendations.
8. Board assembly site may have different recommendations for stencil design.

chanhvinh.com

PACKAGE OUTLINE

DQE0008A

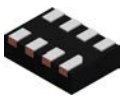

X2SON - 0.4 mm max height

PLASTIC SMALL OUTLINE - NO LEAD

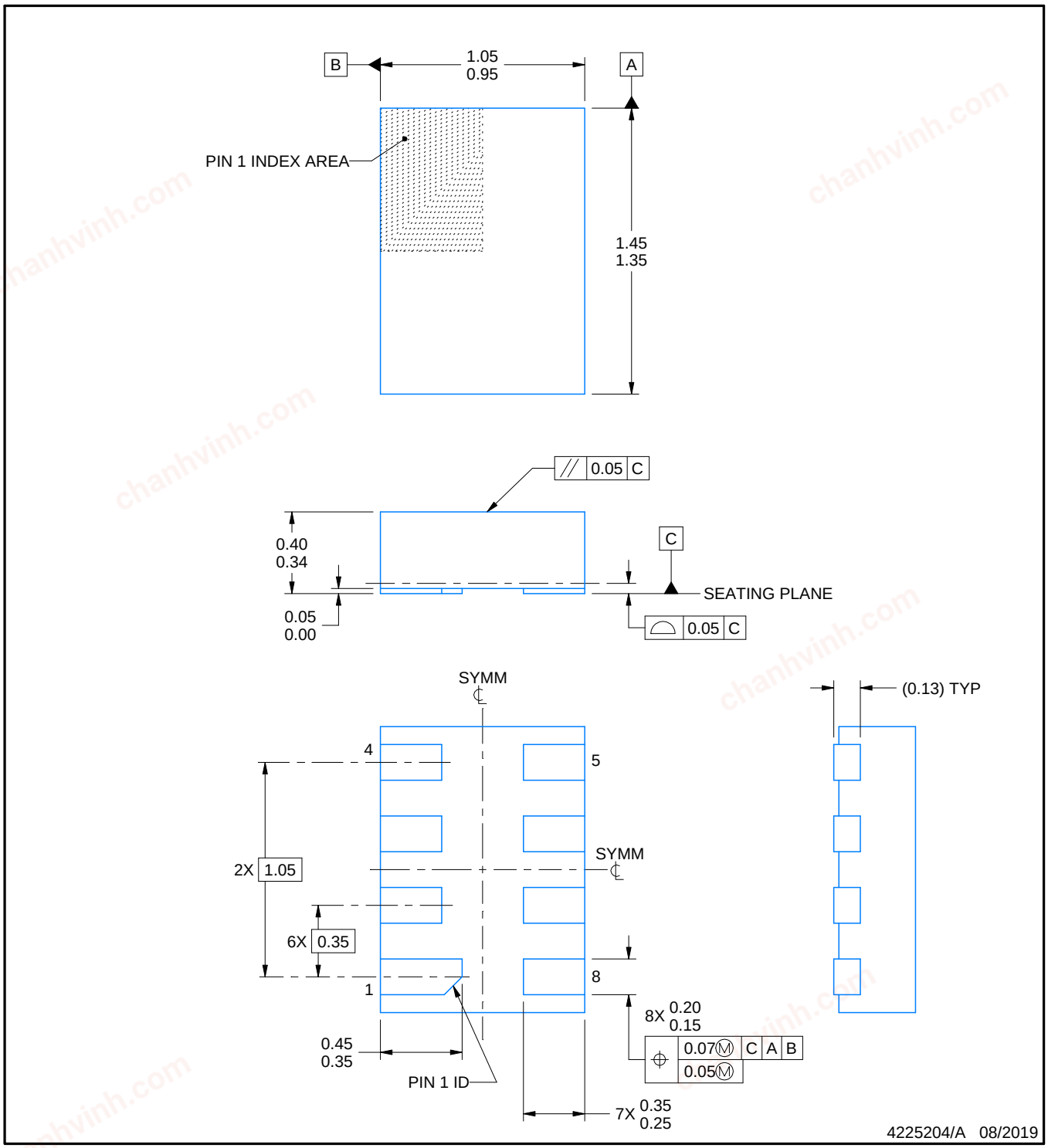

NOTES:

1. All linear dimensions are in millimeters. Any dimensions in parenthesis are for reference only. Dimensioning and tolerancing per ASME Y14.5M.
2. This drawing is subject to change without notice.
3. This package complies to JEDEC MO-287 variation X2EAF.

chanhvinh.com

EXAMPLE BOARD LAYOUT

DQE0008A

X2SON - 0.4 mm max height

PLASTIC SMALL OUTLINE - NO LEAD

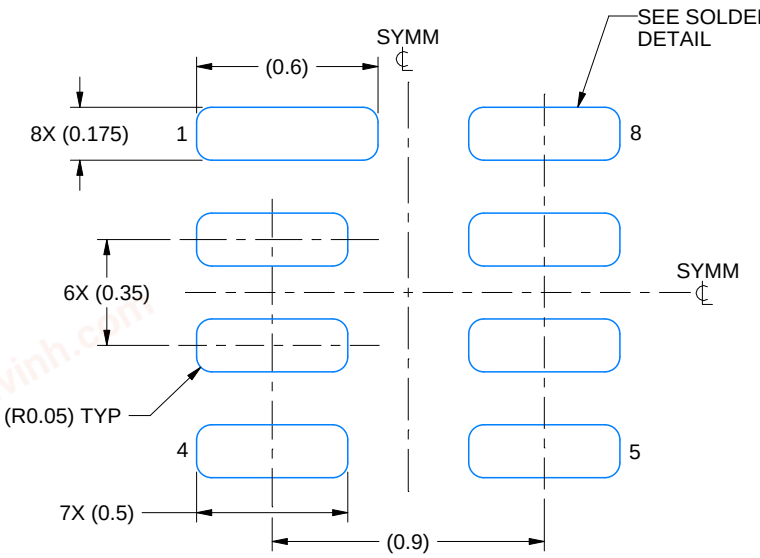

LAND PATTERN EXAMPLE
EXPOSED METAL SHOWN
SCALE: 40X

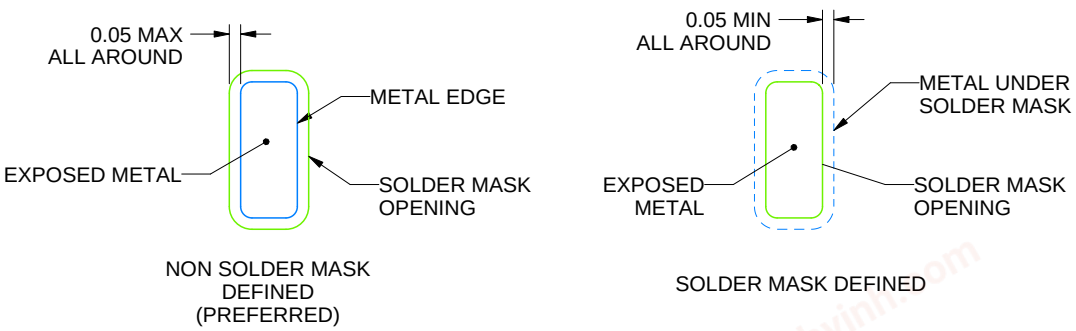

SOLDER MASK DETAILS

4225204/A 08/2019

NOTES: (continued)

4. This package is designed to be soldered to a thermal pad on the board. For more information, see Texas Instruments literature number SLUA271 (www.ti.com/lit/slua271).

chanhvinh.com

EXAMPLE STENCIL DESIGN

DQE0008A

X2SON - 0.4 mm max height

PLASTIC SMALL OUTLINE - NO LEAD

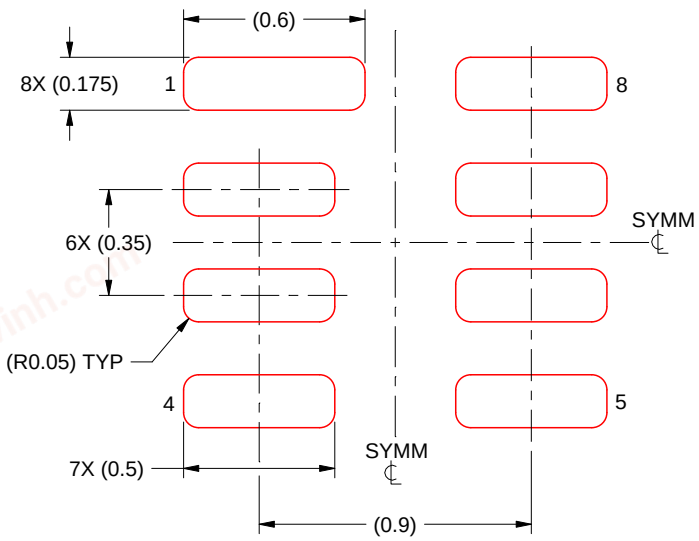

SOLDER PASTE EXAMPLE
BASED ON 0.075 MM THICK STENCIL
SCALE: 40X

4225204/A 08/2019

NOTES: (continued)

5. Laser cutting apertures with trapezoidal walls and rounded corners may offer better paste release. IPC-7525 may have alternate design recommendations.

chanhvinh.com

RSE0008A



PACKAGE OUTLINE

UQFN - 0.6 mm max height

PLASTIC QUAD FLATPACK - NO LEAD

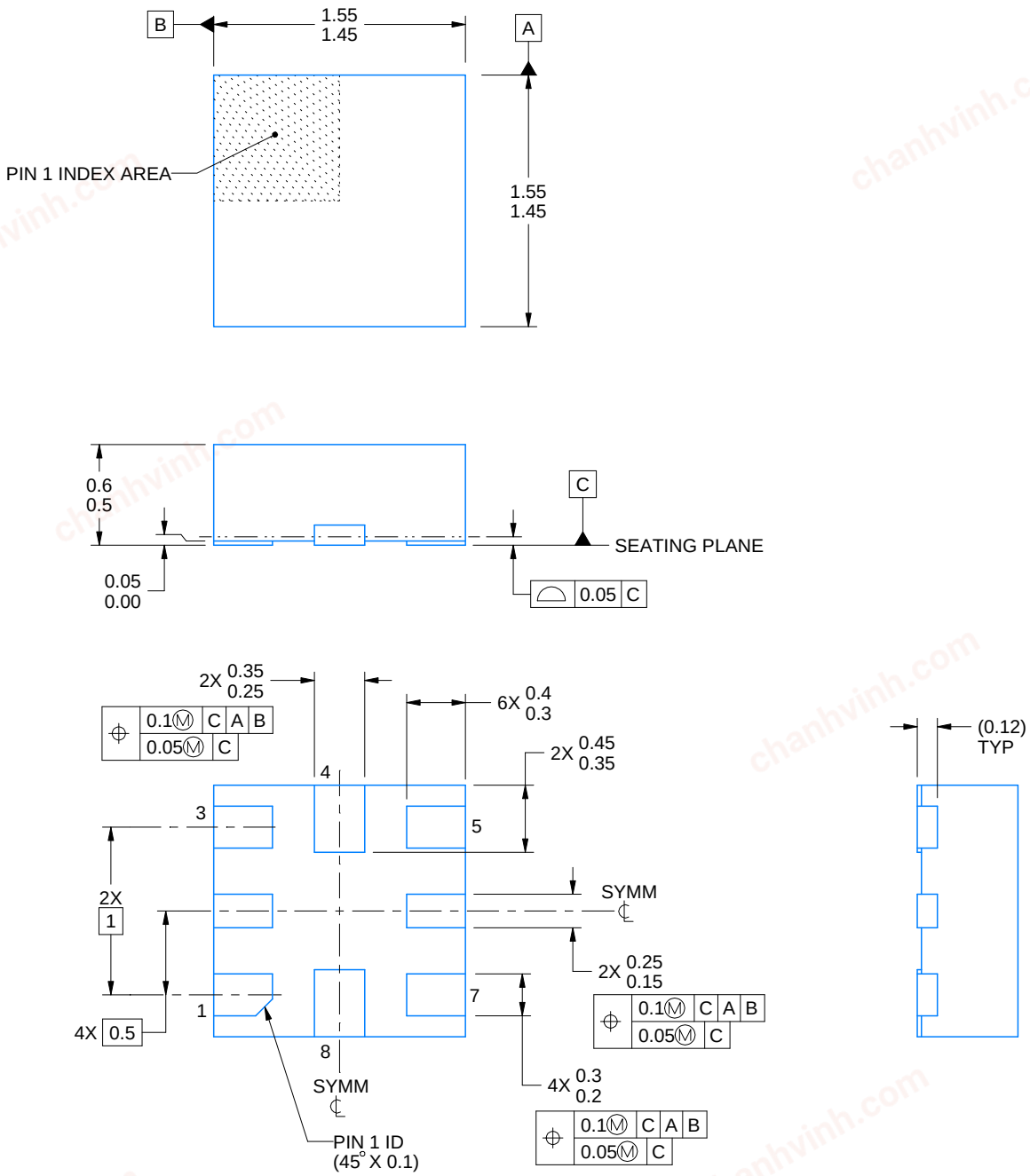

NOTES:

1. All linear dimensions are in millimeters. Any dimensions in parenthesis are for reference only. Dimensioning and tolerancing per ASME Y14.5M.
2. This drawing is subject to change without notice.

chanhvinh.com

EXAMPLE BOARD LAYOUT

RSE0008A

UQFN - 0.6 mm max height

PLASTIC QUAD FLATPACK - NO LEAD

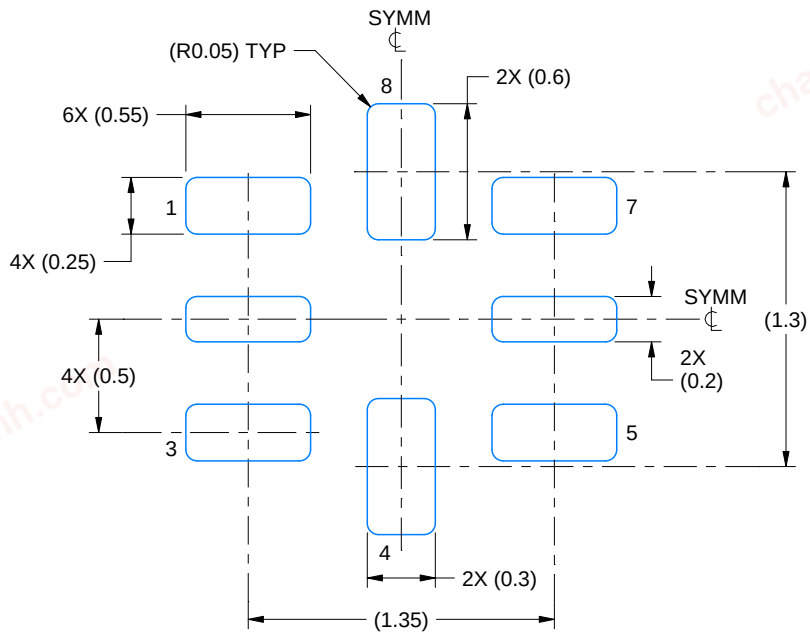

LAND PATTERN EXAMPLE
SCALE:30X

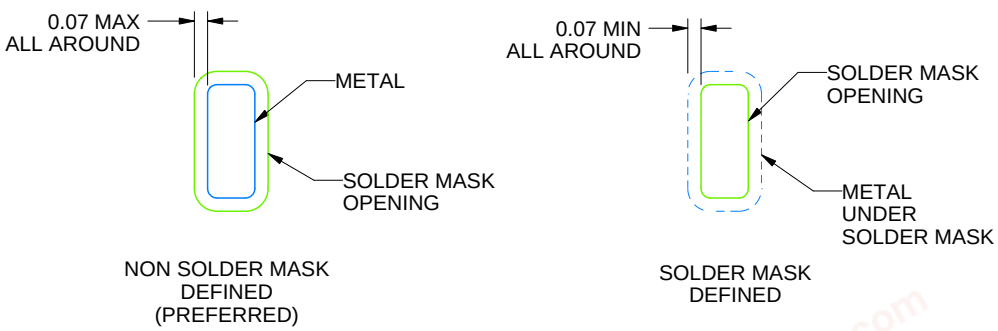

SOLDER MASK DETAILS
NOT TO SCALE

4220323/B 03/2018

NOTES: (continued)

3. For more information, see Texas Instruments literature number SLUA271 (www.ti.com/lit/slua271).

chanhvinh.com

EXAMPLE STENCIL DESIGN

RSE0008A

UQFN - 0.6 mm max height

PLASTIC QUAD FLATPACK - NO LEAD

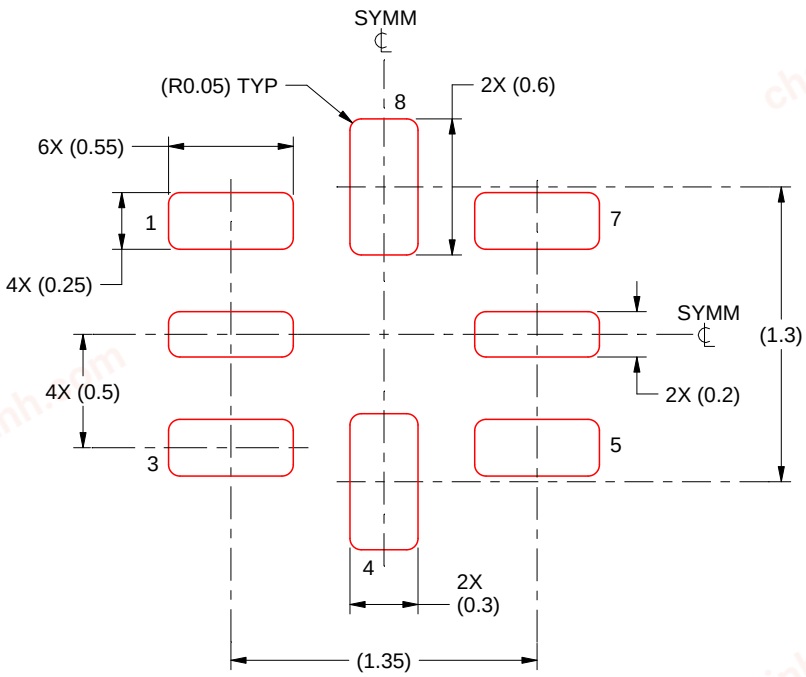

SOLDER PASTE EXAMPLE
BASED ON 0.1 mm THICKNESS
SCALE: 30X

4220323/B 03/2018

NOTES: (continued)

5. Laser cutting apertures with trapezoidal walls and rounded corners may offer better paste release. IPC-7525 may have alternate design recommendations.

chanhvinh.com

IMPORTANT NOTICE AND DISCLAIMER

TI PROVIDES TECHNICAL AND RELIABILITY DATA (INCLUDING DATASHEETS), DESIGN RESOURCES (INCLUDING REFERENCE DESIGNS), APPLICATION OR OTHER DESIGN ADVICE, WEB TOOLS, SAFETY INFORMATION, AND OTHER RESOURCES “AS IS” AND WITH ALL FAULTS, AND DISCLAIMS ALL WARRANTIES, EXPRESS AND IMPLIED, INCLUDING WITHOUT LIMITATION ANY IMPLIED WARRANTIES OF MERCHANTABILITY, FITNESS FOR A PARTICULAR PURPOSE OR NON-INFRINGEMENT OF THIRD PARTY INTELLECTUAL PROPERTY RIGHTS.

These resources are intended for skilled developers designing with TI products. You are solely responsible for (1) selecting the appropriate TI products for your application, (2) designing, validating and testing your application, and (3) ensuring your application meets applicable standards, and any other safety, security, regulatory or other requirements.

These resources are subject to change without notice. TI grants you permission to use these resources only for development of an application that uses the TI products described in the resource. Other reproduction and display of these resources is prohibited. No license is granted to any other TI intellectual property right or to any third party intellectual property right. TI disclaims responsibility for, and you fully indemnify TI and its representatives against any claims, damages, costs, losses, and liabilities arising out of your use of these resources.

TI’s products are provided subject to TI’s Terms of Sale, TI’s General Quality Guidelines, or other applicable terms available either on ti.com or provided in conjunction with such TI products. TI’s provision of these resources does not expand or otherwise alter TI’s applicable warranties or warranty disclaimers for TI products. Unless TI explicitly designates a product as custom or customer-specified, TI products are standard, catalog, general purpose devices.

TI objects to and rejects any additional or different terms you may propose.

Copyright © 2026, Texas Instruments Incorporated

Last updated 10/2025