chanhvinh.com



# SN74LVC1G08 Single 2-Input Positive-AND Gate

## 1 Features

- Available in the ultra-small 0.64mm$^2$ package (DPW) with 0.5mm pitch
- Supports 5V $V_{CC}$ operation
- Inputs accept voltages to 5.5V
- Provides down translation to $V_{CC}$
- Maximum $t_{pd}$ of 3.6ns at 3.3V
- Low power consumption, 10µA maximum $I_{CC}$
- ±24mA output drive at 3.3V
- $I_{off}$ supports live insertion, partial-power-down mode, and back drive protection
- Latch-up performance exceeds 100mA per JESD 78, Class II

## 2 Applications

- ATCA solutions
- Active noise cancellation (ANC)
- Barcode scanner
- Blood pressure monitor
- CPAP machine
- Cable solutions
- DLP 3D machine vision, hyper-spectral imaging, optical networking, and spectroscopy
- E-book
- Embedded PC
- Field transmitter: temperature or pressure sensor
- Fingerprint biometrics
- HVAC: heating, ventilating, and air conditioning
- Network-attached storage (NAS)
- Server motherboard and PSU
- Software defined radio (SDR)
- TV: high-definition (HDTV), LCD, and digital
- Video communications system
- Wireless data access card, headset, keyboard, mouse, and LAN Card
- X-ray: baggage scanner, medical, and dental

## 3 Description

The SN74LVC1G08 device is a single 2-input positive-AND gate. This device performs the Boolean function $Y = A \bullet B$ or $Y = \overline{\overline{A} + \overline{B}}$ in positive logic.

**Package Information**

| PART NUMBER | PACKAGE(1) | PACKAGE SIZE(2) | BODY SIZE(3) |
|---|---|---|---|
| SN74LVC1G08 | DPW (X2SON, 5) | 0.8mm × 0.8mm | 0.8mm × 0.8mm |
| | DRY (SON, 6) | 1.45mm × 1mm | 1.45mm × 1mm |
| | DSF (SON, 6) | 1mm × 1mm | 1mm × 1mm |
| | DRL (SOT, 5) | 1.6mm × 1.6mm | 1.6mm × 1.2mm |
| | DCK (SOT-SC70, 5) | 2mm × 2.1mm | 2mm × 1.25mm |
| | DBV (SOT-23, 5) | 2.9mm × 2.8mm | 2.9mm × 1.6mm |
| | YZP (DSBGA, 5) | 1.39mm × 0.89mm | 1.39mm × 0.89mm |

(1) For more information, see Mechanical, Packaging, and Orderable Information.
(2) The package size (length × width) is a nominal value and includes pins, where applicable.
(3) The body size (length × width) is a nominal value and does not include pins.




**Logic Diagram**

An IMPORTANT NOTICE at the end of this data sheet addresses availability, warranty, changes, use in safety-critical applications, intellectual property matters and other important disclaimers. PRODUCTION DATA.

chanhvinh.com



# Table of Contents

**1 Features**....1
**2 Applications**....1
**3 Description**....1
**4 Pin Configuration and Functions**....3
**5 Specifications**....4
5.1 Absolute Maximum Ratings....4
5.2 ESD Ratings....4
5.3 Recommended Operating Conditions....5
5.4 Thermal Information....5
5.5 Electrical Characteristics....6
5.6 Switching Characteristics, $C_L$ = 15pF....6
5.7 Switching Characteristics, 1.8V and 2.5V....6
5.8 Switching Characteristics, 3.3V and 5V....7
5.9 Operating Characteristics....7
5.10 Typical Characteristics....7
**6 Parameter Measurement Information**....8
**7 Detailed Description**....10
7.1 Overview....10
7.2 Functional Block Diagram....10
7.3 Feature Description....10
7.4 Device Functional Modes....11
**8 Application and Implementation**....12
8.1 Application Information....12
8.2 Typical Application....12
8.3 Power Supply Recommendations....14
8.4 Layout....14
**9 Device and Documentation Support**....16
9.1 Documentation Support....16
9.2 Receiving Notification of Documentation Updates....16
9.3 Support Resources....16
9.4 Trademarks....16
9.5 Electrostatic Discharge Caution....16
9.6 Glossary....16
**10 Revision History**....16
**11 Mechanical, Packaging, and Orderable Information**....18


Copyright © 2026 Texas Instruments Incorporated

chanhvinh.com



## 4 Pin Configuration and Functions

DBV PACKAGE
(TOP VIEW)

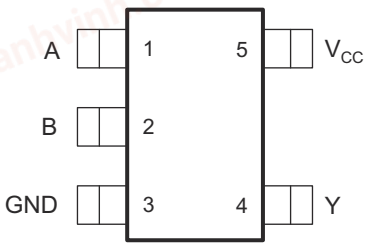


DCK PACKAGE
(TOP VIEW)

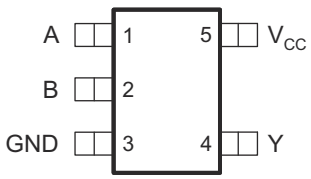


DRL PACKAGE
(TOP VIEW)

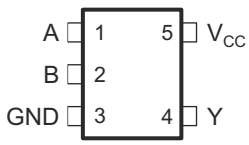


DSF PACKAGE
(TOP VIEW)

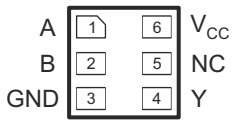


DPW PACKAGE
(TOP VIEW)

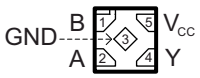


YZP PACKAGE
(BOTTOM VIEW)

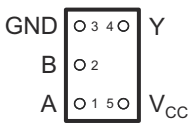


DRY PACKAGE
(TOP VIEW)

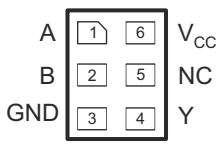


NC – No internal connection
See mechanical drawings for dimensions.

**Pin Functions**

| PIN | | | | DESCRIPTION |
|---|---|---|---|---|
| NAME | DBV, DCK, DRL, YZP | DRY, DSF | DPW | |
| A | 1 | 1 | 2 | Input |
| B | 2 | 2 | 1 | Input |
| GND | 3 | 3 | 3 | Ground |
| NC | | 5 | | Not connected |
| $V_{CC}$ | 5 | 6 | 5 | Power pin |
| Y | 4 | 4 | 4 | Output |

Copyright © 2026 Texas Instruments Incorporated

chanhvinh.com



# 5 Specifications

## 5.1 Absolute Maximum Ratings

over operating free-air temperature range (unless otherwise noted)

| | | | MIN | MAX | UNIT |
|---|---|---|---|---|---|
| $V_{CC}$ (1) | Supply voltage range | | –0.5 | 6.5 | V |
| $V_I$ | Input voltage range(2) | | –0.5 | 6.5 | V |
| $V_O$ | Voltage range applied to any output in the high-impedance or power-off state(2) | | –0.5 | 6.5 | V |
| $V_O$ | Voltage range applied to any output in the high or low state(2) (3) | | –0.5 | $V_{CC}$ + 0.5 | V |
| $I_{IK}$ | Input clamp current | $V_I$ < 0 | | –50 | mA |
| $I_{OK}$ | Output clamp current | $V_O$ < 0 | | –50 | mA |
| $I_O$ | Continuous output current | | | ±50 | mA |
| | Continuous current through $V_{CC}$ or GND | | | ±100 | mA |
| $T_J$(max) | Junction temperature | | | 150 | °C |
| $T_{stg}$ | Storage temperature | | –65 | 150 | °C |

(1) Operation outside the *Absolute Maximum Ratings* may cause permanent device damage. Absolute maximum ratings do not imply functional operation of the device at these or any other conditions beyond those listed under *Recommended Operating Conditions*. If briefly operating outside the *Recommended Operating Conditions* but within the *Absolute Maximum Ratings*, the device may not sustain damage, but it may not be fully functional. Operating the device in this manner may affect device reliability, functionality, performance, and shorten the device lifetime.
(2) The input and output negative-voltage ratings may be exceeded if the input and output current ratings are observed.
(3) The value of $V_{CC}$ is provided in the Recommended Operating Conditions table.

## 5.2 ESD Ratings

| | | | MIN | MAX | UNIT |
|---|---|---|---|---|---|
| $V_{(ESD)}$ | Electrostatic discharge | Human body model (HBM), per ANSI/ESDA/JEDEC JS-001, all pins(1) | 0 | 2000 | V |
| | | Charged device model (CDM), per JEDEC specification JESD22-C101, all pins(2) | 0 | 1000 | |

(1) JEDEC document JEP155 states that 500V HBM allows safe manufacturing with a standard ESD control process.
(2) JEDEC document JEP157 states that 250V CDM allows safe manufacturing with a standard ESD control process.


Copyright © 2026 Texas Instruments Incorporated

chanhvinh.com



## 5.3 Recommended Operating Conditions

| | | | MIN | MAX | UNIT |
|---|---|---|---|---|---|
| $V_{CC}$ | Supply voltage | Operating | 1.65 | 5.5 | V |
| | | Data retention only | 1.5 | | |
| $V_{IH}$ | High-level input voltage | $V_{CC}$ = 1.65V to 1.95V | 0.65 × $V_{CC}$ | | V |
| | | $V_{CC}$ = 2.3V to 2.7V | 1.7 | | |
| | | $V_{CC}$ = 3V to 3.6V | 2 | | |
| | | $V_{CC}$ = 4.5V to 5.5V | 0.7 × $V_{CC}$ | | |
| $V_{IL}$ | Low-level input voltage | $V_{CC}$ = 1.65V to 1.95V | | 0.35 × $V_{CC}$ | V |
| | | $V_{CC}$ = 2.3V to 2.7V | | 0.7 | |
| | | $V_{CC}$ = 3V to 3.6V | | 0.8 | |
| | | $V_{CC}$ = 4.5V to 5.5V | | 0.3 × $V_{CC}$ | |
| $V_I$ | Input voltage | | 0 | 5.5 | V |
| $V_O$ | Output voltage | | 0 | $V_{CC}$ | V |
| $I_{OH}$ | High-level output current | $V_{CC}$ = 1.65V | | –4 | mA |
| | | $V_{CC}$ = 2.3V | | –8 | |
| | | $V_{CC}$ = 3V | | –16 | |
| | | | | –24 | |
| | | $V_{CC}$ = 4.5V | | –32 | |
| $I_{OL}$ | Low-level output current | $V_{CC}$ = 1.65V | | 4 | mA |
| | | $V_{CC}$ = 2.3V | | 8 | |
| | | $V_{CC}$ = 3V | | 16 | |
| | | | | 24 | |
| | | $V_{CC}$ = 4.5V | | 32 | |
| Δt/Δv | Input transition rise or fall rate | $V_{CC}$ = 1.8V ± 0.15V, 2.5V ± 0.2V | | 20 | ns/V |
| | | $V_{CC}$ = 3.3V ± 0.3V | | 10 | |
| | | $V_{CC}$ = 5V ± 0.5V | | 5 | |
| $T_A$ | Operating free-air temperature | | –40 | 125 | °C |

## 5.4 Thermal Information

| PACKAGE | PINS | THERMAL METRIC(1) | | | | | | UNIT |
|---|---|---|---|---|---|---|---|---|
| | | $R_{\theta JA}$ | $R_{\theta JC(top)}$ | $R_{\theta JB}$ | $\Psi_{JT}$ | $\Psi_{JB}$ | $R_{\theta JC(bot)}$ | |
| DBV (SOT-23) | 5 | 357.1 | 263.7 | 264.4 | 195.6 | 262.2 | - | °C/W |
| DCK (SOT-SC70) | 5 | 371 | 297.5 | 258.6 | 195.6 | 256.2 | - | °C/W |
| DRL (SOT-5X3) | 5 | 364.1 | 280.6 | 261.5 | 195.6 | 259.2 | - | °C/W |
| DRY (SON) | 6 | 438.8 | 276.8 | 271.7 | 83.8 | 271.4 | – | °C/W |
| YZP (DSBGA) | 5 | 130 | 54 | 51 | 1 | 50 | – | °C/W |
| DPW (X2SON) | 5 | 340 | 215 | 294 | 41 | 294 | 250 | °C/W |

(1) For more information about traditional and new thermal metrics, see the *Semiconductor and IC Package Thermal Metrics* application note.

Copyright © 2026 Texas Instruments Incorporated

chanhvinh.com



## 5.5 Electrical Characteristics

over recommended operating free-air temperature range (unless otherwise noted)

| PARAMETER | | TEST CONDITIONS | $V_{CC}$ | –40°C to 85°C | | | –40°C to 125°C RECOMMENDED | | | UNIT |
|---|---|---|---|---|---|---|---|---|---|---|
| | | | | MIN | TYP(1) | MAX | MIN | TYP | MAX | |
| $V_{OH}$ | | $I_{OH}$ = –100µA | 1.65V to 5.5V | $V_{CC}$ – 0.1 | | | $V_{CC}$ – 0.15 | | | V |
| | | $I_{OH}$ = –4mA | 1.65V | 1.2 | | | 1.2 | | | |
| | | $I_{OH}$ = –8mA | 2.3V | 1.9 | | | 1.9 | | | |
| | | $I_{OH}$ = –16mA | 3V | 2.4 | | | 2.4 | | | |
| | | $I_{OH}$ = –24mA | | 2.3 | | | 2.3 | | | |
| | | $I_{OH}$ = –32mA | 4.5V | 3.8 | | | 3.8 | | | |
| $V_{OL}$ | | $I_{OL}$ = 100µA | 1.65V to 5.5V | | | 0.1 | | | 0.1 | V |
| | | $I_{OL}$ = 4mA | 1.65V | | | 0.45 | | | 0.45 | |
| | | $I_{OL}$ = 8mA | 2.3V | | | 0.3 | | | 0.3 | |
| | | $I_{OL}$ = 16mA | 3V | | | 0.4 | | | 0.4 | |
| | | $I_{OL}$ = 24mA | | | | 0.55 | | | 0.55 | |
| | | $I_{OL}$ = 32mA | 4.5V | | | 0.55 | | | 0.55 | |
| $I_I$ | A or B inputs | $V_I$ = 5.5V or GND | 0 to 5.5V | | | ±5 | | | ±5 | µA |
| $I_{off}$ | | $V_I$ or $V_O$ = 5.5V | 0 | | | ±10 | | | ±10 | µA |
| $I_{CC}$ | | $V_I$ = 5.5V or GND, $I_O$ = 0 | 1.65V to 5.5V | | | 10 | | | 10 | µA |
| $\Delta I_{CC}$ | | One input at $V_{CC}$ – 0.6V, Other inputs at $V_{C\,C}$ or GND | 3V to 5.5V | | | 500 | | | 500 | µA |
| $C_i$ | | $V_I$ = $V_{CC}$ or GND | 3.3V | | 4 | | | 4 | | pF |

(1) All typical values are at $V_{CC}$ = 3.3V, $T_A$ = 25°C.

## 5.6 Switching Characteristics, $C_L$ = 15pF

over recommended operating free-air temperature range (unless otherwise noted) (see Figure 6-1)

| PARAMETER | FROM (INPUT) | TO (OUTPUT) | –40°C to 85°C | | | | | | | | UNIT |
|---|---|---|---|---|---|---|---|---|---|---|---|
| | | | $V_{CC}$ = 1.8V ± 0.15V | | $V_{CC}$ = 2.5V ± 0.2V | | $V_{CC}$ = 3.3V ± 0.3V | | $V_{CC}$ = 5V ± 0.5V | | |
| | | | MIN | MAX | MIN | MAX | MIN | MAX | MIN | MAX | |
| $t_{pd}$ | A or B | Y | 1.5 | 7.2 | 0.7 | 4.4 | 0.8 | 3.6 | 0.8 | 3.4 | ns |

## 5.7 Switching Characteristics, 1.8V and 2.5V

over recommended operating free-air temperature range, (unless otherwise noted) (see Figure 6-2)

| PARAMETER | FROM (INPUT) | TO (OUTPUT) | –40°C to 85°C | | –40°C to 125°C RECOMMENDED | | –40°C to 85°C | | –40°C to 125°C RECOMMENDED | | UNIT |
|---|---|---|---|---|---|---|---|---|---|---|---|
| | | | $V_{CC}$ = 1.8V ± 0.15V | | $V_{CC}$ = 1.8V ± 0.15V | | $V_{CC}$ = 2.5V ± 0.2V | | $V_{CC}$ = 2.5V ± 0.2V | | |
| | | | MIN | MAX | MIN | MAX | MIN | MAX | MIN | MAX | |
| $t_{pd}$ | A or B | Y | 2.4 | 8 | 2.4 | 10 | 1.1 | 5.5 | 1.1 | 7 | ns |


Copyright © 2026 Texas Instruments Incorporated

chanhvinh.com



## 5.8 Switching Characteristics, 3.3V and 5V

over recommended operating free-air temperature range, $C_L$ = 30pF or 50pF (unless otherwise noted) (see Figure 6-2)

| PARAMETER | FROM (INPUT) | TO (OUTPUT) | –40°C to 85°C | | –40°C to 125°C RECOMMENDED | | –40°C to 85°C | | –40°C to 125°C RECOMMENDED | | UNIT |
|---|---|---|---|---|---|---|---|---|---|---|---|
| | | | $V_{CC}$ = 3.3V ± 0.3V | | $V_{CC}$ = 3.3V ± 0.3V | | $V_{CC}$ = 5V ± 0.5V | | $V_{CC}$ = 5V ± 0.5V | | |
| | | | MIN | MAX | MIN | MAX | MIN | MAX | MIN | MAX | |
| $t_{pd}$ | A or B | Y | 1 | 4.5 | 1 | 6 | 1 | 4 | 1 | 5 | ns |

## 5.9 Operating Characteristics

$T_A$ = 25°C

| PARAMETER | | TEST CONDITIONS | $V_{CC}$ = 1.8V | $V_{CC}$ = 2.5V | $V_{CC}$ = 3.3V | $V_{CC}$ = 5V | UNIT |
|---|---|---|---|---|---|---|---|
| | | | TYP | TYP | TYP | TYP | |
| $C_{pd}$ | Power dissipation capacitance | f = 10MHz | 21 | 24 | 26 | 31 | pF |

## 5.10 Typical Characteristics

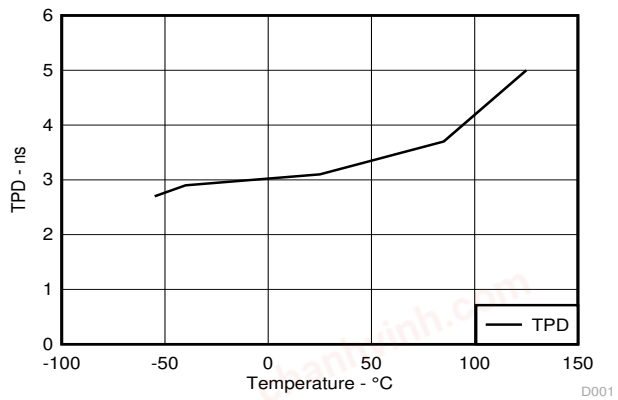


Figure 5-1. TPD Across Temperature at 3.3V Vcc

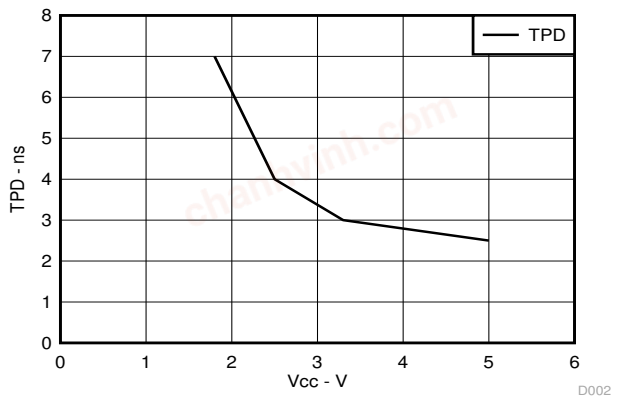


Figure 5-2. TPD Across Vcc at 25°C

Copyright © 2026 Texas Instruments Incorporated

chanhvinh.com



## 6 Parameter Measurement Information

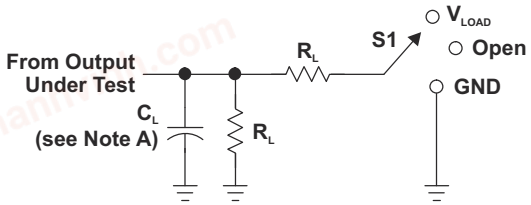


LOAD CIRCUIT

| TEST | S1 |
|---|---|
| $t_{PLH}/t_{PHL}$ | Open |
| $t_{PLZ}/t_{PZL}$ | $V_{LOAD}$ |
| $t_{PHZ}/t_{PZH}$ | GND |

| $V_{CC}$ | INPUTS | | $V_M$ | $V_{LOAD}$ | $C_L$ | $R_L$ | $V_\Delta$ |
|---|---|---|---|---|---|---|---|
| | $V_I$ | $t_r/t_f$ | | | | | |
| 1.8 V ± 0.15 V | $V_{CC}$ | ≤2 ns | $V_{CC}/2$ | 2 × $V_{CC}$ | 15 pF | 1 MΩ | 0.15 V |
| 2.5 V ± 0.2 V | $V_{CC}$ | ≤2 ns | $V_{CC}/2$ | 2 × $V_{CC}$ | 15 pF | 1 MΩ | 0.15 V |
| 3.3 V ± 0.3 V | 3 V | ≤2.5 ns | 1.5 V | 6 V | 15 pF | 1 MΩ | 0.3 V |
| 5 V ± 0.5 V | $V_{CC}$ | ≤2.5 ns | $V_{CC}/2$ | 2 × $V_{CC}$ | 15 pF | 1 MΩ | 0.3 V |

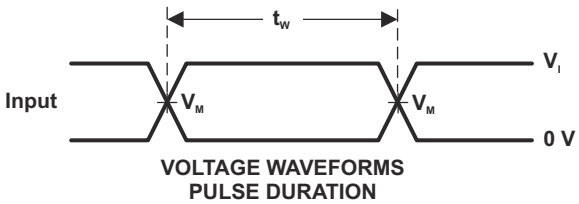


VOLTAGE WAVEFORMS
PULSE DURATION

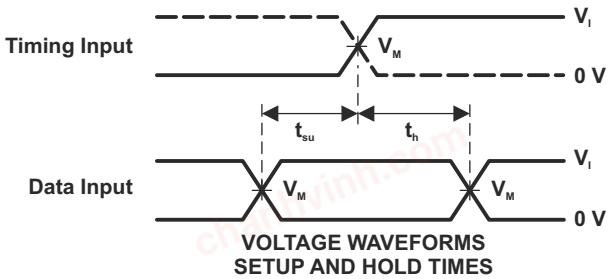


VOLTAGE WAVEFORMS
SETUP AND HOLD TIMES

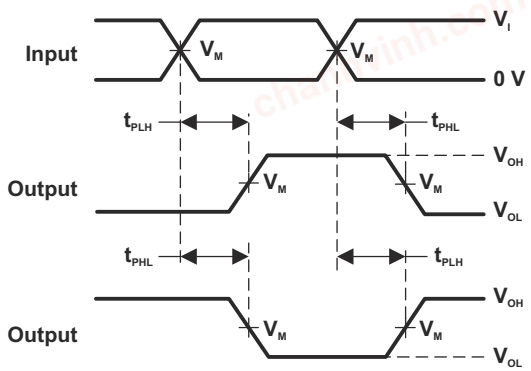


VOLTAGE WAVEFORMS
PROPAGATION DELAY TIMES
INVERTING AND NONINVERTING OUTPUTS

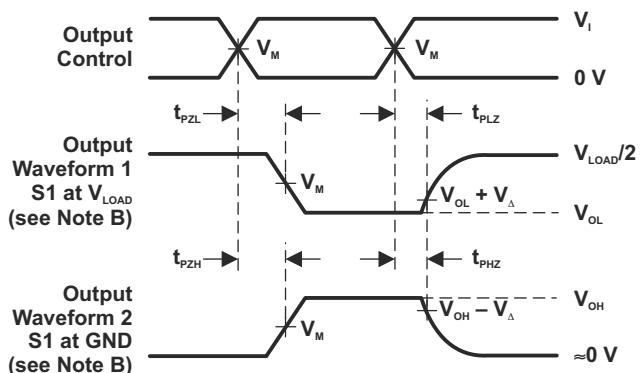


VOLTAGE WAVEFORMS
ENABLE AND DISABLE TIMES
LOW- AND HIGH-LEVEL ENABLING

NOTES: A. $C_L$ includes probe and jig capacitance.
B. Waveform 1 is for an output with internal conditions such that the output is low, except when disabled by the output control. Waveform 2 is for an output with internal conditions such that the output is high, except when disabled by the output control.
C. All input pulses are supplied by generators having the following characteristics: PRR ≤ 10 MHz, $Z_O$ = 50 Ω.
D. The outputs are measured one at a time, with one transition per measurement.
E. $t_{PLZ}$ and $t_{PHZ}$ are the same as $t_{dis}$.
F. $t_{PZL}$ and $t_{PZH}$ are the same as $t_{en}$.
G. $t_{PLH}$ and $t_{PHL}$ are the same as $t_{pd}$.
H. All parameters and waveforms are not applicable to all devices.

**Figure 6-1. Load Circuit and Voltage Waveforms**


Copyright © 2026 Texas Instruments Incorporated

chanhvinh.com



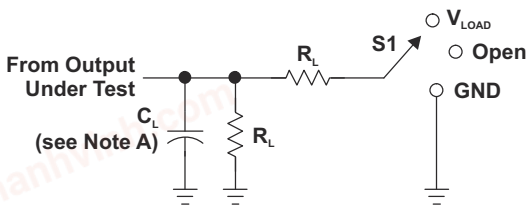


LOAD CIRCUIT

| TEST | S1 |
|---|---|
| $t_{PLH}/t_{PHL}$ | Open |
| $t_{PLZ}/t_{PZL}$ | $V_{LOAD}$ |
| $t_{PHZ}/t_{PZH}$ | GND |

| $V_{CC}$ | INPUTS | | $V_M$ | $V_{LOAD}$ | $C_L$ | $R_L$ | $V_\Delta$ |
|---|---|---|---|---|---|---|---|
| | $V_I$ | $t_r/t_f$ | | | | | |
| 1.8 V ± 0.15 V | $V_{CC}$ | ≤2 ns | $V_{CC}/2$ | 2 × $V_{CC}$ | 30 pF | 1 kΩ | 0.15 V |
| 2.5 V ± 0.2 V | $V_{CC}$ | ≤2 ns | $V_{CC}/2$ | 2 × $V_{CC}$ | 30 pF | 500 Ω | 0.15 V |
| 3.3 V ± 0.3 V | 3 V | ≤2.5 ns | 1.5 V | 6 V | 50 pF | 500 Ω | 0.3 V |
| 5 V ± 0.5 V | $V_{CC}$ | ≤2.5 ns | $V_{CC}/2$ | 2 × $V_{CC}$ | 50 pF | 500 Ω | 0.3 V |

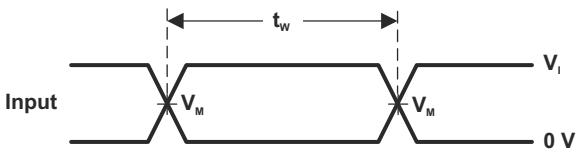


VOLTAGE WAVEFORMS
PULSE DURATION

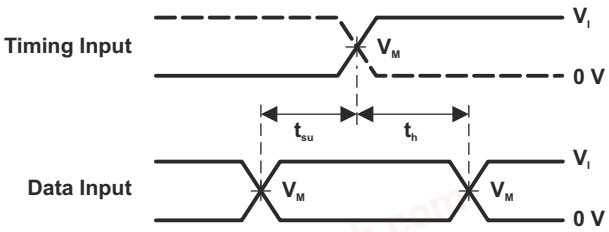


VOLTAGE WAVEFORMS
SETUP AND HOLD TIMES

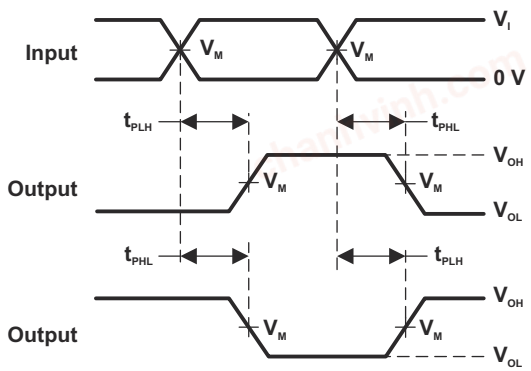


VOLTAGE WAVEFORMS
PROPAGATION DELAY TIMES
INVERTING AND NONINVERTING OUTPUTS

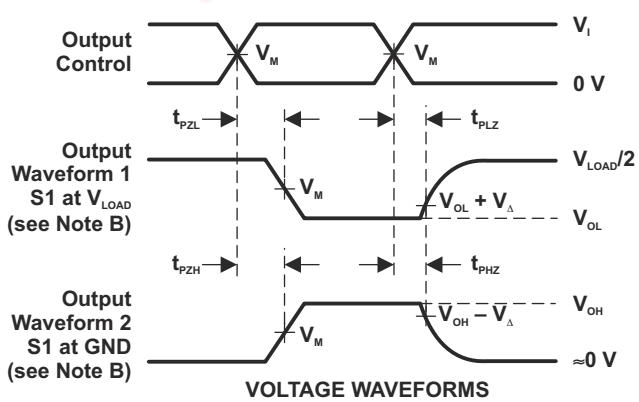


VOLTAGE WAVEFORMS
ENABLE AND DISABLE TIMES
LOW- AND HIGH-LEVEL ENABLING

NOTES: A. $C_L$ includes probe and jig capacitance.
B. Waveform 1 is for an output with internal conditions such that the output is low, except when disabled by the output control. Waveform 2 is for an output with internal conditions such that the output is high, except when disabled by the output control.
C. All input pulses are supplied by generators having the following characteristics: PRR ≤ 10 MHz, $Z_O$ = 50 Ω.
D. The outputs are measured one at a time, with one transition per measurement.
E. $t_{PLZ}$ and $t_{PHZ}$ are the same as $t_{dis}$.
F. $t_{PZL}$ and $t_{PZH}$ are the same as $t_{en}$.
G. $t_{PLH}$ and $t_{PHL}$ are the same as $t_{pd}$.
H. All parameters and waveforms are not applicable to all devices.

**Figure 6-2. Load Circuit and Voltage Waveforms**

Copyright © 2026 Texas Instruments Incorporated

chanhvinh.com



# 7 Detailed Description

## 7.1 Overview

The SN74LVC1G08 device is a single 2-input positive-AND gate. The device performs the Boolean function Y = A ● B or Y = $\overline{A + B}$ in positive logic.

## 7.2 Functional Block Diagram




**Figure 7-1. Logic Diagram (Positive Side)**

## 7.3 Feature Description

### *7.3.1 Balanced CMOS Push-Pull Outputs*

This device includes balanced CMOS push-pull outputs. The term *balanced* indicates that the device can sink and source similar currents. The drive capability of this device can create fast edges into light loads, so routing and load conditions must be considered to prevent ringing. Additionally, the outputs of this device are capable of driving larger currents than the device can sustain without being damaged. Limit the output power of the device to avoid damage due to overcurrent. The electrical and thermal limits defined in the *Absolute Maximum Ratings* must be followed at all times.

Unused push-pull CMOS outputs must be left disconnected.

### *7.3.2 Partial Power Down ($I_{off}$)*

This device includes circuitry to disable all outputs when the supply pin is held at 0V. When disabled, the outputs neither source nor sink current, regardless of the input voltages. The amount of leakage current at each output is defined by the $I_{off}$ specification in the *Electrical Characteristics* table.

### *7.3.3 Standard CMOS Inputs*

This device includes standard CMOS inputs. Standard CMOS inputs are high impedance and are typically modeled as a resistor in parallel with the input capacitance given in the *Electrical Characteristics*. The worst case resistance is calculated with the maximum input voltage, given in the *Absolute Maximum Ratings*, and the maximum input leakage current, given in the *Electrical Characteristics*, using Ohm's law (R = V ÷ I).

Standard CMOS inputs require that input signals transition between valid logic states quickly, as defined by the input transition time or rate in the *Recommended Operating Conditions* table. Failing to meet this specification results in excessive power consumption and can cause oscillations. See more details in *Implications of Slow or Floating CMOS Inputs*.

Do not leave standard CMOS inputs floating at any time during operation. Terminate unused inputs at $V_{CC}$ or GND. If a system does not always drive an input, consider adding a pull-up or pull-down resistor to provide a valid input voltage. The resistor value depends on multiple factors; a 10kΩ resistor, however, is recommended and typically meets all requirements.

### *7.3.4 Clamp Diode Structure*

Figure 7-2 shows the inputs and outputs to this device have negative clamping diodes only.

**CAUTION**

Voltages beyond the values specified in the *Absolute Maximum Ratings* table can cause damage to the device. The input and output voltage ratings may be exceeded if the input and output clamp-current ratings are observed.


Copyright © 2026 Texas Instruments Incorporated

chanhvinh.com



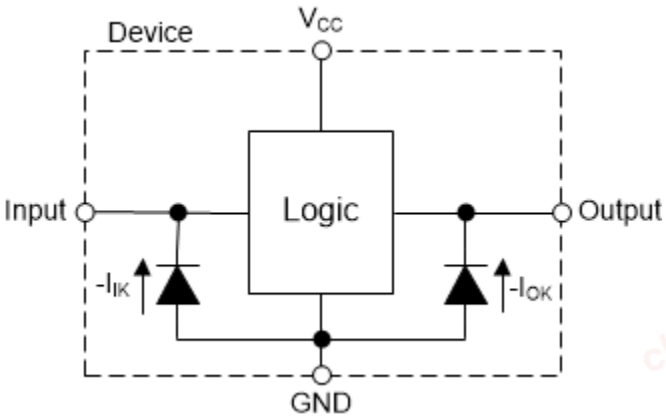


**Figure 7-2. Electrical Placement of Clamping Diodes for Each Input and Output**

### *7.3.5 Over-Voltage Tolerant Inputs*

The SN74LVC1G08 includes over-voltage tolerant inputs. The input pins support high-state input voltages larger than the supply voltage by utilizing an input protection circuit that does not include a standard positive clamp diode. See *Recommended Operating Conditions* for the recommended input voltage.

**CAUTION**

Do not exceed the maximum input voltage range provided in *Absolute Maximum Ratings*. Exceeding the maximum input voltage range rating can cause immediate and permanent damage to the device.

## 7.4 Device Functional Modes

Function Table lists the functional modes for SN74LVC1G08.

**Table 7-1. Function Table**

| INPUTS(1) | | OUTPUT (2) |
|---|---|---|
| A | B | Y |
| H | H | H |
| L | X | L |
| X | L | L |

(1) H = High Voltage Level, L = Low Voltage Level, X = Don't Care

(2) H = Driving High, L = Driving Low, Z = High Impedance State

Copyright © 2026 Texas Instruments Incorporated

chanhvinh.com



# 8 Application and Implementation

**Note**

Information in the following applications sections is not part of the TI component specification, and TI does not warrant its accuracy or completeness. TI's customers are responsible for determining suitability of components for their purposes, as well as validating and testing their design implementation to confirm system functionality.

## 8.1 Application Information

A common application for AND gates is their use in power sequencing. Power sequencing is often employed in applications that require a processor or other delicate device with specific voltage timing requirements in order to protect the device from malfunctioning. Using the SN74LVC1G08 to verify that the processor has turned on can protect it from any harmful signals.

## 8.2 Typical Application

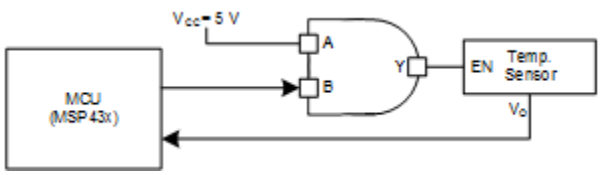


**Figure 8-1. Power Sequencing Application**

### *8.2.1 Design Requirements*

The SN74LVC1G08 device uses CMOS technology and has balanced output drive. Take care to avoid bus contention because it can drive currents that can exceed maximum limits.

The SN74LVC1G08 allows switching control of analog and digital signals with a digital control signal. All input signals must remain as close as possible to either 0V or $V_{CC}$ for peak operation.

#### 8.2.1.1 Power Considerations

Verify that the desired supply voltage is within the range specified in the *Electrical Characteristics*. The supply voltage sets the device electrical characteristics, as described in the *Electrical Characteristics* section.

The positive voltage supply must be capable of sourcing current equal to the total current to be sourced by all outputs of the SN74LVC1G08 plus the maximum static supply current, $I_{CC}$, listed in the *Electrical Characteristics*, and any transient current required for switching. The logic device can only source as much current that is provided by the positive supply source. Verify that the maximum total current through $V_{CC}$ listed in the *Absolute Maximum Ratings* is not exceeded.

The ground must be capable of sinking current equal to the total current to be sunk by all outputs of the SN74LVC1G08 plus the maximum supply current, $I_{CC}$, listed in the *Electrical Characteristics*, and any transient current required for switching. The logic device can only sink as much current that can be sunk into the ground connection. Verify that the maximum total current through GND listed in the *Absolute Maximum Ratings* is not exceeded.

The SN74LVC1G08 can drive a load with a total capacitance less than or equal to 50pF while still meeting all of the data sheet specifications. Larger capacitive loads can be applied; however, TI recommends adding a series resistor between the output and capacitor to prevent excessive current.

The SN74LVC1G08 can drive a load with total resistance described by $R_L \geq V_O / I_O$, with the output voltage and current defined in the *Electrical Characteristics* table with $V_{OH}$ and $V_{OL}$. When outputting in the HIGH state, the output voltage in the equation is defined as the difference between the measured output voltage and the supply voltage at the $V_{CC}$ pin.


Copyright © 2026 Texas Instruments Incorporated

chanhvinh.com



Total power consumption can be calculated using the information provided in the *CMOS Power Consumption and Cpd Calculation* application note.

Thermal increase can be calculated using the information provided in the *Thermal Characteristics of Standard Linear and Logic (SLL) Packages and Devices* application note.

**CAUTION**

The maximum junction temperature, $T_{J(max)}$ listed in the *Absolute Maximum Ratings*, is an additional limitation to prevent damage to the device. Do not violate any values listed in the *Absolute Maximum Ratings*. These limits are provided to prevent damage to the device.

#### 8.2.1.2 Input Considerations

Input signals must cross $V_{IL(max)}$ to be considered a logic LOW, and $V_{IH(min)}$ to be considered a logic HIGH. Do not exceed the maximum input voltage range found in the *Absolute Maximum Ratings*.

Unused inputs must be terminated to either $V_{CC}$ or ground. The unused inputs can be directly terminated if the input is completely unused, or the inputs can be connected with a pullup or pulldown resistor if the input is used sometimes, but not always. A pullup resistor is used for a default state of HIGH, and a pulldown resistor is used for a default state of LOW. The drive current of the controller, leakage current into the SN74LVC1G08 (as specified in the *Electrical Characteristics*), and the desired input transition rate limits the resistor size. A 10kΩ resistor value is often used due to these factors.

The SN74LVC1G08 has CMOS inputs and thus requires fast input transitions to operate correctly, as defined in the Electrical Characteristics table. Slow input transitions can cause oscillations, additional power consumption, and reduction in device reliability.

Refer to the *Feature Description* for additional information regarding the inputs for this device.

#### 8.2.1.3 Output Considerations

The positive supply voltage is used to produce the output HIGH voltage. Drawing current from the output decreases the output voltage as specified by the $V_{OH}$ specification in the *Electrical Characteristics*. The ground voltage is used to produce the output LOW voltage. Sinking current into the output increases the output voltage as specified by the $V_{OL}$ specification in the *Electrical Characteristics*.

Push-pull outputs that can be in opposite states, even for a very short time period, must never be connected directly together. This can cause excessive current and damage to the device.

Two channels within the same device with the same input signals can be connected in parallel for additional output drive strength.

Unused outputs can be left floating. Do not connect outputs directly to $V_{CC}$ or ground.

Refer to the *Feature Description* section for additional information regarding the outputs for this device.

### *8.2.2 Detailed Design Procedure*

1. Recommended input conditions:
   - For rise time and fall time specifications, see Δt/Δv in the *Recommended Operating Conditions* table.
   - For specified high and low levels, see $V_{IH}$ and $V_{IL}$ in the *Recommended Operating Conditions* table.
   - Inputs and outputs are overvoltage tolerant and can therefore go as high as 5.5V at any valid $V_{CC}$.
2. Recommended output conditions:
   - Load currents not exceeding ±50mA.
3. Frequency selection criterion:
   - The effects of frequency upon the device's power consumption should be studied in the *CMOS Power Consumption and CPD Calculation* application note.
   - Added trace resistance and capacitance can reduce maximum frequency capability; follow the layout practices listed in the *Layout* section.

Copyright © 2026 Texas Instruments Incorporated

chanhvinh.com



### 8.2.3 Application Curves

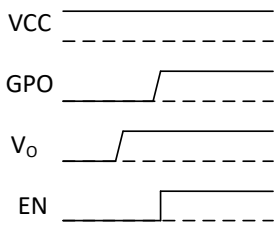


**Figure 8-2. Typical Application Timing Diagram**

## 8.3 Power Supply Recommendations

The power supply can be any voltage between the minimum and maximum supply voltage rating listed in the *Recommended Operating Conditions*.

Verify that each $V_{CC}$ terminal has a good bypass capacitor to prevent power disturbance. For the SN74LVC1G08, a 0.1µF bypass capacitor is recommended. To reject different frequencies of noise, use multiple bypass capacitors in parallel. Capacitors with values of 0.1µF and 1µF are commonly used in parallel.

## 8.4 Layout

### 8.4.1 Layout Guidelines

- Bypass capacitor placement
  - Place near the positive supply terminal of the device
  - Provide an electrically short ground return path
  - Use wide traces to minimize impedance
  - Keep the device, capacitors, and traces on the same side of the board whenever possible
- Signal trace geometry
  - 8mil to 12mil trace width
  - Lengths less than 12cm to minimize transmission line effects
  - Avoid 90° corners for signal traces
  - Use an unbroken ground plane below signal traces
  - Flood fill areas around signal traces with ground
  - Parallel traces must be separated by at least 3x dielectric thickness
  - For traces longer than 12cm
    - Use impedance controlled traces
    - Source-terminate using a series damping resistor near the output
    - Avoid branches; buffer each signal that must branch separately


Copyright © 2026 Texas Instruments Incorporated

chanhvinh.com



### 8.4.2 Layout Example

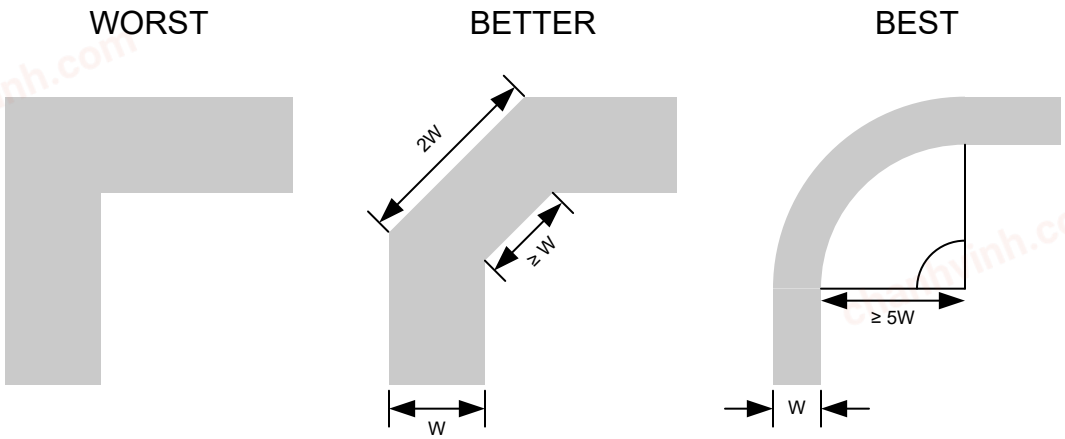


**Figure 8-3. Example Trace Corners for Improved Signal Integrity**

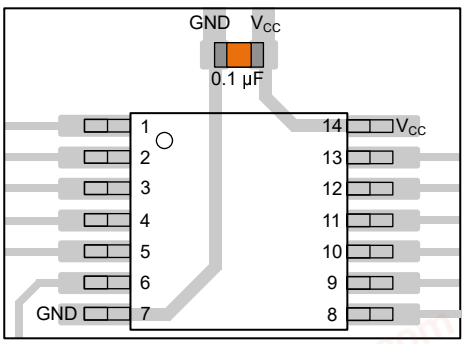


**Figure 8-4. Example Bypass Capacitor Placement for TSSOP and Similar Packages**

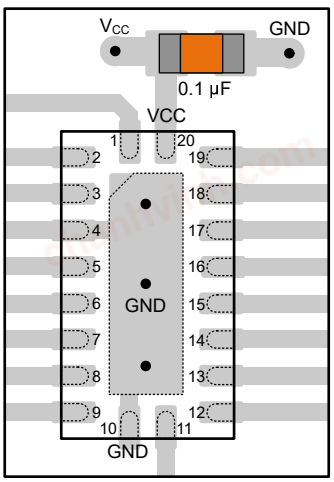


**Figure 8-5. Example Bypass Capacitor Placement for WQFN and Similar Packages**

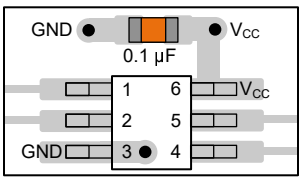


**Figure 8-6. Example Bypass Capacitor Placement for SOT, SC70 and Similar Packages**

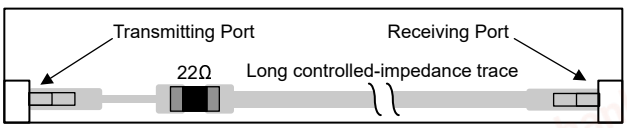


**Figure 8-7. Example Damping Resistor Placement for Improved Signal Integrity**

chanhvinh.com



# 9 Device and Documentation Support

TI offers an extensive line of development tools. Tools and software to evaluate the performance of the device, generate code, and develop solutions are listed below.

## 9.1 Documentation Support

### *9.1.1 Related Documentation*

For related documentation, see the following:

- Texas Instruments, *CMOS Power Consumption and $C_{pd}$ Calculation* application note
- Texas Instruments, *Designing With Logic* application note
- Texas Instruments, *Thermal Characteristics of Standard Linear and Logic (SLL) Packages and Devices* application note

## 9.2 Receiving Notification of Documentation Updates

To receive notification of documentation updates, navigate to the device product folder on ti.com. Click on *Notifications* to register and receive a weekly digest of any product information that has changed. For change details, review the revision history included in any revised document.

## 9.3 Support Resources

TI E2E™ support forums are an engineer's go-to source for fast, verified answers and design help — straight from the experts. Search existing answers or ask your own question to get the quick design help you need.

Linked content is provided "AS IS" by the respective contributors. They do not constitute TI specifications and do not necessarily reflect TI's views; see TI's Terms of Use.

## 9.4 Trademarks

TI E2E™ is a trademark of Texas Instruments.
All trademarks are the property of their respective owners.

## 9.5 Electrostatic Discharge Caution



This integrated circuit can be damaged by ESD. Texas Instruments recommends that all integrated circuits be handled with appropriate precautions. Failure to observe proper handling and installation procedures can cause damage.

ESD damage can range from subtle performance degradation to complete device failure. Precision integrated circuits may be more susceptible to damage because very small parametric changes could cause the device not to meet its published specifications.

## 9.6 Glossary

| | |
|---|---|
| TI Glossary | This glossary lists and explains terms, acronyms, and definitions. |

# 10 Revision History

NOTE: Page numbers for previous revisions may differ from page numbers in the current version.

**Changes from May 1, 2019 to August 12, 2026 (from Revision Z (May 2019) to Revision AA (August 2026))** **Page**

- Updated the numbering format for tables, figures, and cross-references throughout the document..... 1
- Updated *Device Information* table to include body and package dimensions..... 1
- Updated format for *Thermal Information* table.....5
- Changed Junction-to-ambient thermal resistance value for DBV package from: 207.6°C/W to: 357.1°C/W..... 5
- Changed Junction-to-case (top) thermal resistance value for DBV package from: 145.2°C/W to: 263.7°C/W.. 5
- Changed Junction-to-board characterization value for DBV package from: 53.5°C/W to: 264.4°C/W.....5
- Changed Junction-to-top characterization value for DBV package from: 37.5°C/W to: 195.6°C/W.....5
- Changed Junction-to-board characterization value for DBV package from: 53.1°C/W to: 262.2°C/W.....5
- Changed Junction-to-ambient thermal resistance value for DCK package from: 283.1°C/W to: 371°C/W.....5


Copyright © 2026 Texas Instruments Incorporated

chanhvinh.com



- Changed Junction-to-case (top) thermal resistance value for DCK package from: 92.3°C/W to: 297.5°C/W....5
- Changed Junction-to-board characterization value for DCK package from: 60.9°C/W to: 258.6°C/W.....5
- Changed Junction-to-top characterization value for DCK package from: 1.7°C/W to: 195.6°C/W.....5
- Changed Junction-to-board characterization value for DCK package from: 60.1°C/W to: 256.2°C/W.....5
- Changed Junction-to-ambient thermal resistance value for DRL package from: 242.9°C/W to: 364.1°C/W..... 5
- Changed Junction-to-case (top) thermal resistance value for DRL package from: 77.5°C/W to: 280.6°C/W.... 5
- Changed Junction-to-board characterization value for DRL package from: 77.5°C/W to: 261.5°C/W..... 5
- Changed Junction-to-top characterization value for DRL package from: 9.6°C/W to: 195.6°C/W..... 5
- Changed Junction-to-board characterization value for DRL package from: 77.3°C/W to: 259.2°C/W..... 5
- Updated *Overview*, *Application and Implementation*, *Device and Documentation Support* sections to extend detailed feature descriptions and more detailed information. ..... 9
- Added parallel trace spacing recommendation to layout guidelines. Changed wording of "Avoid branches; buffer signals that must branch separately" to "Avoid branches; buffer each signal that must branch separately"..... 14

**Changes from Revision Y (April 2014) to Revision Z (May 2019)** **Page**

- Added $T_J$(max) spec to Absolute Maximum Ratings table..... 4
- Moved $T_{stg}$ spec from Handling Ratings table to Absolute Maximum Ratings table..... 4
- Renamed Handling Ratings table to ESD Ratings table ..... 4

chanhvinh.com

chanhvinh.com



## 11 Mechanical, Packaging, and Orderable Information

The following pages include mechanical, packaging, and orderable information. This information is the most current data available for the designated devices. This data is subject to change without notice and revision of this document. For browser-based versions of this data sheet, refer to the left-hand navigation.


Copyright © 2026 Texas Instruments Incorporated

chanhvinh.com



## PACKAGING INFORMATION

| Orderable part number | Status (1) | Material type (2) | Package \| Pins | Package qty \| Carrier | RoHS (3) | Lead finish/ Ball material (4) | MSL rating/ Peak reflow (5) | Op temp (°C) | Part marking (6) |
|---|---|---|---|---|---|---|---|---|---|
| SN74LVC1G08DBVR | Active | Production | SOT-23 (DBV) \| 5 | 3000 \| LARGE T&R | Yes | NIPDAU \| SN | Level-1-260C-UNLIM | -40 to 125 | (C085, C08F, C08J, C08K, C08R, C 08T) (C08P, C08S) |
| SN74LVC1G08DBVR.A | Active | Production | SOT-23 (DBV) \| 5 | 3000 \| LARGE T&R | Yes | SN | Level-1-260C-UNLIM | -40 to 125 | (C085, C08F, C08J, C08K, C08R, C 08T) (C08P, C08S) |
| SN74LVC1G08DBVR.B | Active | Production | SOT-23 (DBV) \| 5 | 3000 \| LARGE T&R | Yes | SN | Level-1-260C-UNLIM | -40 to 125 | (C085, C08F, C08J, C08K, C08R, C 08T) (C08P, C08S) |
| SN74LVC1G08DBVRE4 | Active | Production | SOT-23 (DBV) \| 5 | 3000 \| LARGE T&R | Yes | NIPDAU | Level-1-260C-UNLIM | -40 to 125 | C08 C08P |
| SN74LVC1G08DBVRG4 | Active | Production | SOT-23 (DBV) \| 5 | 3000 \| LARGE T&R | Yes | NIPDAU | Level-1-260C-UNLIM | -40 to 125 | C08 C08P |
| SN74LVC1G08DBVRG4.A | Active | Production | SOT-23 (DBV) \| 5 | 3000 \| LARGE T&R | Yes | NIPDAU | Level-1-260C-UNLIM | -40 to 125 | C08 C08P |
| SN74LVC1G08DBVRG4.B | Active | Production | SOT-23 (DBV) \| 5 | 3000 \| LARGE T&R | Yes | NIPDAU | Level-1-260C-UNLIM | -40 to 125 | C08 C08P |
| SN74LVC1G08DBVT | Active | Production | SOT-23 (DBV) \| 5 | 250 \| SMALL T&R | Yes | NIPDAU \| SN | Level-1-260C-UNLIM | -40 to 125 | (C085, C08F, C08J, C08K, C08R) (C08H, C08P, C08S) |
| SN74LVC1G08DBVT.B | Active | Production | SOT-23 (DBV) \| 5 | 250 \| SMALL T&R | Yes | NIPDAU | Level-1-260C-UNLIM | -40 to 125 | (C085, C08F, C08J, C08K, C08R) (C08H, C08P, C08S) |
| SN74LVC1G08DBVTE4 | Active | Production | SOT-23 (DBV) \| 5 | 250 \| SMALL T&R | Yes | NIPDAU | Level-1-260C-UNLIM | -40 to 125 | C08 C08P |
| SN74LVC1G08DBVTG4.B | Active | Production | SOT-23 (DBV) \| 5 | 250 \| SMALL T&R | Yes | NIPDAU | Level-1-260C-UNLIM | -40 to 125 | C08 C08P |
| SN74LVC1G08DCKR | Active | Production | SC70 (DCK) \| 5 | 3000 \| LARGE T&R | Yes | NIPDAU \| SN | Level-1-260C-UNLIM | -40 to 125 | (CE5, CEF, CEJ, CE K, CER, CET) (CEH, CEP, CES) |

chanhvinh.com



| Orderable part number | Status (1) | Material type (2) | Package \| Pins | Package qty \| Carrier | RoHS (3) | Lead finish/ Ball material (4) | MSL rating/ Peak reflow (5) | Op temp (°C) | Part marking (6) |
|---|---|---|---|---|---|---|---|---|---|
| SN74LVC1G08DCKR.A | Active | Production | SC70 (DCK) \| 5 | 3000 \| LARGE T&R | Yes | SN | Level-1-260C-UNLIM | -40 to 125 | (CE5, CEF, CEJ, CEK, CER, CET) (CEH, CEP, CES) |
| SN74LVC1G08DCKR.B | Active | Production | SC70 (DCK) \| 5 | 3000 \| LARGE T&R | Yes | SN | Level-1-260C-UNLIM | -40 to 125 | (CE5, CEF, CEJ, CEK, CER, CET) (CEH, CEP, CES) |
| SN74LVC1G08DCKRE4 | Active | Production | SC70 (DCK) \| 5 | 3000 \| LARGE T&R | Yes | NIPDAU | Level-1-260C-UNLIM | -40 to 125 | CE5 CES |
| SN74LVC1G08DCKRG4 | Active | Production | SC70 (DCK) \| 5 | 3000 \| LARGE T&R | Yes | NIPDAU | Level-1-260C-UNLIM | -40 to 125 | CE5 CES |
| SN74LVC1G08DCKRG4.B | Active | Production | SC70 (DCK) \| 5 | 3000 \| LARGE T&R | Yes | NIPDAU | Level-1-260C-UNLIM | -40 to 125 | CE5 CES |
| SN74LVC1G08DCKT | Active | Production | SC70 (DCK) \| 5 | 250 \| SMALL T&R | Yes | NIPDAU \| SN | Level-1-260C-UNLIM | -40 to 125 | (CE5, CEF, CEJ, CEK, CER, CET) (CEH, CEP, CES) |
| SN74LVC1G08DCKT.B | Active | Production | SC70 (DCK) \| 5 | 250 \| SMALL T&R | Yes | NIPDAU | Level-1-260C-UNLIM | -40 to 125 | (CE5, CEF, CEJ, CEK, CER, CET) (CEH, CEP, CES) |
| SN74LVC1G08DCKTE4 | Active | Production | SC70 (DCK) \| 5 | 250 \| SMALL T&R | Yes | NIPDAU | Level-1-260C-UNLIM | -40 to 125 | CE5 CES |
| SN74LVC1G08DCKTG4 | Active | Production | SC70 (DCK) \| 5 | 250 \| SMALL T&R | Yes | NIPDAU | Level-1-260C-UNLIM | -40 to 125 | CE5 CES |
| SN74LVC1G08DCKTG4.B | Active | Production | SC70 (DCK) \| 5 | 250 \| SMALL T&R | Yes | NIPDAU | Level-1-260C-UNLIM | -40 to 125 | CE5 CES |
| SN74LVC1G08DPWR | Active | Production | X2SON (DPW) \| 5 | 3000 \| LARGE T&R | Yes | NIPDAU | Level-1-260C-UNLIM | -40 to 125 | M4 |
| SN74LVC1G08DPWR.B | Active | Production | X2SON (DPW) \| 5 | 3000 \| LARGE T&R | Yes | NIPDAU | Level-1-260C-UNLIM | -40 to 125 | M4 |
| SN74LVC1G08DRLR | Active | Production | SOT-5X3 (DRL) \| 5 | 4000 \| LARGE T&R | Yes | NIPDAUAG | Level-1-260C-UNLIM | -40 to 125 | (CE7, CER) |
| SN74LVC1G08DRLR.A | Active | Production | SOT-5X3 (DRL) \| 5 | 4000 \| LARGE T&R | Yes | NIPDAUAG | Level-1-260C-UNLIM | -40 to 125 | (CE7, CER) |
| SN74LVC1G08DRLR.B | Active | Production | SOT-5X3 (DRL) \| 5 | 4000 \| LARGE T&R | Yes | NIPDAUAG | Level-1-260C-UNLIM | -40 to 125 | (CE7, CER) |
| SN74LVC1G08DRLRG4 | Active | Production | SOT-5X3 (DRL) \| 5 | 4000 \| LARGE T&R | Yes | NIPDAUAG | Level-1-260C-UNLIM | -40 to 125 | (CE7, CER) |
| SN74LVC1G08DRY2 | Active | Production | SON (DRY) \| 6 | 5000 \| LARGE T&R | Yes | NIPDAU \| NIPDAUAG | Level-1-260C-UNLIM | -40 to 125 | CE |
| SN74LVC1G08DRY2.B | Active | Production | SON (DRY) \| 6 | 5000 \| LARGE T&R | Yes | NIPDAUAG | Level-1-260C-UNLIM | -40 to 125 | CE |
| SN74LVC1G08DRYR | Active | Production | SON (DRY) \| 6 | 5000 \| LARGE T&R | Yes | NIPDAU | Level-1-260C-UNLIM | -40 to 125 | CE |
| SN74LVC1G08DRYR.B | Active | Production | SON (DRY) \| 6 | 5000 \| LARGE T&R | Yes | NIPDAU | Level-1-260C-UNLIM | -40 to 125 | CE |

chanhvinh.com



| Orderable part number | Status (1) | Material type (2) | Package \| Pins | Package qty \| Carrier | RoHS (3) | Lead finish/ Ball material (4) | MSL rating/ Peak reflow (5) | Op temp (°C) | Part marking (6) |
|---|---|---|---|---|---|---|---|---|---|
| SN74LVC1G08DRYRG4 | Active | Production | SON (DRY) \| 6 | 5000 \| LARGE T&R | Yes | NIPDAU | Level-1-260C-UNLIM | -40 to 125 | CE |
| SN74LVC1G08DRYRG4.B | Active | Production | SON (DRY) \| 6 | 5000 \| LARGE T&R | Yes | NIPDAU | Level-1-260C-UNLIM | -40 to 125 | CE |
| SN74LVC1G08DSF2 | Active | Production | SON (DSF) \| 6 | 5000 \| LARGE T&R | Yes | NIPDAU \| NIPDAUAG | Level-1-260C-UNLIM | -40 to 125 | CE |
| SN74LVC1G08DSF2.B | Active | Production | SON (DSF) \| 6 | 5000 \| LARGE T&R | Yes | NIPDAUAG | Level-1-260C-UNLIM | -40 to 125 | CE |
| SN74LVC1G08DSFR | Active | Production | SON (DSF) \| 6 | 5000 \| LARGE T&R | Yes | NIPDAU \| NIPDAUAG | Level-1-260C-UNLIM | -40 to 125 | CE |
| SN74LVC1G08DSFR.B | Active | Production | SON (DSF) \| 6 | 5000 \| LARGE T&R | Yes | NIPDAU | Level-1-260C-UNLIM | -40 to 125 | CE |
| SN74LVC1G08DSFRG4 | Active | Production | SON (DSF) \| 6 | 5000 \| LARGE T&R | Yes | NIPDAU | Level-1-260C-UNLIM | -40 to 125 | CE |
| SN74LVC1G08DSFRG4.B | Active | Production | SON (DSF) \| 6 | 5000 \| LARGE T&R | Yes | NIPDAU | Level-1-260C-UNLIM | -40 to 125 | CE |
| SN74LVC1G08YZPR | Active | Production | DSBGA (YZP) \| 5 | 3000 \| LARGE T&R | Yes | SNAGCU | Level-1-260C-UNLIM | -40 to 85 | (CE, CE7) |
| SN74LVC1G08YZPR.B | Active | Production | DSBGA (YZP) \| 5 | 3000 \| LARGE T&R | Yes | SNAGCU | Level-1-260C-UNLIM | -40 to 85 | (CE, CE7) |

(1) **Status:** For more details on status, see our product life cycle.

(2) **Material type:** When designated, preproduction parts are prototypes/experimental devices, and are not yet approved or released for full production. Testing and final process, including without limitation quality assurance, reliability performance testing, and/or process qualification, may not yet be complete, and this item is subject to further changes or possible discontinuation. If available for ordering, purchases will be subject to an additional waiver at checkout, and are intended for early internal evaluation purposes only. These items are sold without warranties of any kind.

(3) **RoHS values:** Yes, No, RoHS Exempt. See the TI RoHS Statement for additional information and value definition.

(4) **Lead finish/Ball material:** Parts may have multiple material finish options. Finish options are separated by a vertical ruled line. Lead finish/Ball material values may wrap to two lines if the finish value exceeds the maximum column width.

(5) **MSL rating/Peak reflow:** The moisture sensitivity level ratings and peak solder (reflow) temperatures. In the event that a part has multiple moisture sensitivity ratings, only the lowest level per JEDEC standards is shown. Refer to the shipping label for the actual reflow temperature that will be used to mount the part to the printed circuit board.

(6) **Part marking:** There may be an additional marking, which relates to the logo, the lot trace code information, or the environmental category of the part.

Multiple part markings will be inside parentheses. Only one part marking contained in parentheses and separated by a "~" will appear on a part. If a line is indented then it is a continuation of the previous line and the two combined represent the entire part marking for that device.

**Important Information and Disclaimer:**The information provided on this page represents TI's knowledge and belief as of the date that it is provided. TI bases its knowledge and belief on information provided by third parties, and makes no representation or warranty as to the accuracy of such information. Efforts are underway to better integrate information from third parties. TI has taken and continues to take reasonable steps to provide representative and accurate information but may not have conducted destructive testing or chemical analysis on incoming materials and chemicals. TI and TI suppliers consider certain information to be proprietary, and thus CAS numbers and other limited information may not be available for release.

chanhvinh.com



In no event shall TI's liability arising out of such information exceed the total purchase price of the TI part(s) at issue in this document sold by TI to Customer on an annual basis.

**OTHER QUALIFIED VERSIONS OF SN74LVC1G08 :**

- Automotive : SN74LVC1G08-Q1
- Enhanced Product : SN74LVC1G08-EP

NOTE: Qualified Version Definitions:

- Automotive - Q100 devices qualified for high-reliability automotive applications targeting zero defects
- Enhanced Product - Supports Defense, Aerospace and Medical Applications

chanhvinh.com

# PACKAGE MATERIALS INFORMATION



## TAPE AND REEL INFORMATION

REEL DIMENSIONS

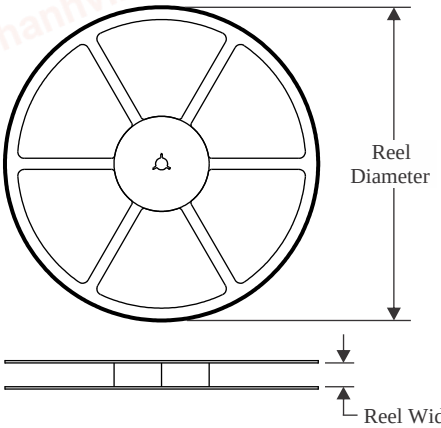


TAPE DIMENSIONS

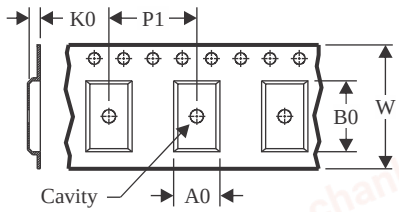


| | |
|---|---|
| A0 | Dimension designed to accommodate the component width |
| B0 | Dimension designed to accommodate the component length |
| K0 | Dimension designed to accommodate the component thickness |
| W | Overall width of the carrier tape |
| P1 | Pitch between successive cavity centers |

QUADRANT ASSIGNMENTS FOR PIN 1 ORIENTATION IN TAPE

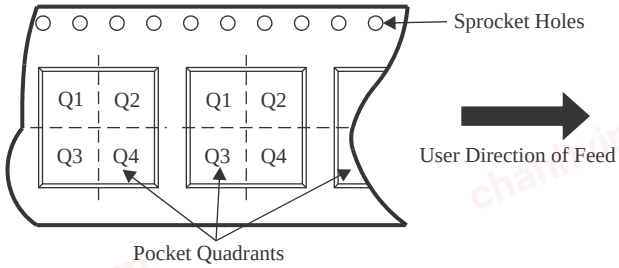


*All dimensions are nominal

| Device | Package Type | Package Drawing | Pins | SPQ | Reel Diameter (mm) | Reel Width W1 (mm) | A0 (mm) | B0 (mm) | K0 (mm) | P1 (mm) | W (mm) | Pin1 Quadrant |
|---|---|---|---|---|---|---|---|---|---|---|---|---|
| SN74LVC1G08DBVR | SOT-23 | DBV | 5 | 3000 | 178.0 | 8.4 | 3.2 | 3.2 | 1.4 | 4.0 | 8.0 | Q3 |
| SN74LVC1G08DBVR | SOT-23 | DBV | 5 | 3000 | 180.0 | 8.4 | 3.2 | 3.2 | 1.4 | 4.0 | 8.0 | Q3 |
| SN74LVC1G08DBVR | SOT-23 | DBV | 5 | 3000 | 180.0 | 8.4 | 3.2 | 3.2 | 1.4 | 4.0 | 8.0 | Q3 |
| SN74LVC1G08DBVR | SOT-23 | DBV | 5 | 3000 | 178.0 | 9.0 | 3.23 | 3.17 | 1.37 | 4.0 | 8.0 | Q3 |
| SN74LVC1G08DBVR | SOT-23 | DBV | 5 | 3000 | 178.0 | 9.0 | 3.3 | 3.2 | 1.4 | 4.0 | 8.0 | Q3 |
| SN74LVC1G08DBVR | SOT-23 | DBV | 5 | 3000 | 180.0 | 8.4 | 3.23 | 3.17 | 1.37 | 4.0 | 8.0 | Q3 |
| SN74LVC1G08DBVRG4 | SOT-23 | DBV | 5 | 3000 | 178.0 | 9.0 | 3.23 | 3.17 | 1.37 | 4.0 | 8.0 | Q3 |
| SN74LVC1G08DBVT | SOT-23 | DBV | 5 | 250 | 180.0 | 8.4 | 3.2 | 3.2 | 1.4 | 4.0 | 8.0 | Q3 |
| SN74LVC1G08DBVT | SOT-23 | DBV | 5 | 250 | 180.0 | 8.4 | 3.23 | 3.17 | 1.37 | 4.0 | 8.0 | Q3 |
| SN74LVC1G08DBVT | SOT-23 | DBV | 5 | 250 | 178.0 | 9.2 | 3.3 | 3.23 | 1.55 | 4.0 | 8.0 | Q3 |
| SN74LVC1G08DBVT | SOT-23 | DBV | 5 | 250 | 180.0 | 8.4 | 3.2 | 3.2 | 1.4 | 4.0 | 8.0 | Q3 |
| SN74LVC1G08DBVT | SOT-23 | DBV | 5 | 250 | 178.0 | 9.0 | 3.23 | 3.17 | 1.37 | 4.0 | 8.0 | Q3 |
| SN74LVC1G08DBVT | SOT-23 | DBV | 5 | 250 | 178.0 | 9.0 | 3.3 | 3.2 | 1.4 | 4.0 | 8.0 | Q3 |
| SN74LVC1G08DCKR | SC70 | DCK | 5 | 3000 | 178.0 | 9.0 | 2.4 | 2.5 | 1.2 | 4.0 | 8.0 | Q3 |
| SN74LVC1G08DCKR | SC70 | DCK | 5 | 3000 | 180.0 | 8.4 | 2.47 | 2.3 | 1.25 | 4.0 | 8.0 | Q3 |
| SN74LVC1G08DCKR | SC70 | DCK | 5 | 3000 | 180.0 | 8.4 | 2.3 | 2.55 | 1.2 | 4.0 | 8.0 | Q3 |

chanhvinh.com

# PACKAGE MATERIALS INFORMATION



| Device | Package Type | Package Drawing | Pins | SPQ | Reel Diameter (mm) | Reel Width W1 (mm) | A0 (mm) | B0 (mm) | K0 (mm) | P1 (mm) | W (mm) | Pin1 Quadrant |
|---|---|---|---|---|---|---|---|---|---|---|---|---|
| SN74LVC1G08DCKR | SC70 | DCK | 5 | 3000 | 178.0 | 9.2 | 2.4 | 2.4 | 1.22 | 4.0 | 8.0 | Q3 |
| SN74LVC1G08DCKR | SC70 | DCK | 5 | 3000 | 178.0 | 9.0 | 2.4 | 2.5 | 1.2 | 4.0 | 8.0 | Q3 |
| SN74LVC1G08DCKR | SC70 | DCK | 5 | 3000 | 178.0 | 8.4 | 2.25 | 2.45 | 1.2 | 4.0 | 8.0 | Q3 |
| SN74LVC1G08DCKRG4 | SC70 | DCK | 5 | 3000 | 178.0 | 9.2 | 2.4 | 2.4 | 1.22 | 4.0 | 8.0 | Q3 |
| SN74LVC1G08DCKT | SC70 | DCK | 5 | 250 | 178.0 | 9.2 | 2.4 | 2.4 | 1.22 | 4.0 | 8.0 | Q3 |
| SN74LVC1G08DCKT | SC70 | DCK | 5 | 250 | 180.0 | 8.4 | 2.47 | 2.3 | 1.25 | 4.0 | 8.0 | Q3 |
| SN74LVC1G08DCKT | SC70 | DCK | 5 | 250 | 178.0 | 9.0 | 2.4 | 2.5 | 1.2 | 4.0 | 8.0 | Q3 |
| SN74LVC1G08DCKT | SC70 | DCK | 5 | 250 | 178.0 | 9.0 | 2.4 | 2.5 | 1.2 | 4.0 | 8.0 | Q3 |
| SN74LVC1G08DCKTG4 | SC70 | DCK | 5 | 250 | 178.0 | 9.2 | 2.4 | 2.4 | 1.22 | 4.0 | 8.0 | Q3 |
| SN74LVC1G08DPWR | X2SON | DPW | 5 | 3000 | 178.0 | 8.4 | 0.91 | 0.91 | 0.5 | 2.0 | 8.0 | Q3 |
| SN74LVC1G08DRLR | SOT-5X3 | DRL | 5 | 4000 | 180.0 | 8.4 | 1.98 | 1.78 | 0.69 | 4.0 | 8.0 | Q3 |
| SN74LVC1G08DRY2 | SON | DRY | 6 | 5000 | 180.0 | 8.4 | 1.65 | 1.2 | 0.7 | 4.0 | 8.0 | Q3 |
| SN74LVC1G08DRY2 | SON | DRY | 6 | 5000 | 180.0 | 9.5 | 1.6 | 1.15 | 0.75 | 4.0 | 8.0 | Q3 |
| SN74LVC1G08DRYR | SON | DRY | 6 | 5000 | 180.0 | 9.5 | 1.15 | 1.6 | 0.75 | 4.0 | 8.0 | Q1 |
| SN74LVC1G08DRYRG4 | SON | DRY | 6 | 5000 | 180.0 | 9.5 | 1.15 | 1.6 | 0.75 | 4.0 | 8.0 | Q1 |
| SN74LVC1G08DSF2 | SON | DSF | 6 | 5000 | 180.0 | 8.4 | 1.16 | 1.16 | 0.63 | 4.0 | 8.0 | Q3 |
| SN74LVC1G08DSF2 | SON | DSF | 6 | 5000 | 180.0 | 9.5 | 1.16 | 1.16 | 0.5 | 4.0 | 8.0 | Q3 |
| SN74LVC1G08DSFR | SON | DSF | 6 | 5000 | 180.0 | 8.4 | 1.16 | 1.16 | 0.5 | 4.0 | 8.0 | Q2 |
| SN74LVC1G08DSFR | SON | DSF | 6 | 5000 | 180.0 | 8.4 | 1.16 | 1.16 | 0.63 | 4.0 | 8.0 | Q2 |
| SN74LVC1G08DSFR | SON | DSF | 6 | 5000 | 180.0 | 9.5 | 1.16 | 1.16 | 0.5 | 4.0 | 8.0 | Q2 |
| SN74LVC1G08DSFRG4 | SON | DSF | 6 | 5000 | 180.0 | 8.4 | 1.16 | 1.16 | 0.5 | 4.0 | 8.0 | Q2 |
| SN74LVC1G08YZPR | DSBGA | YZP | 5 | 3000 | 180.0 | 8.4 | 1.02 | 1.52 | 0.63 | 4.0 | 8.0 | Q1 |

chanhvinh.com

# PACKAGE MATERIALS INFORMATION



TAPE AND REEL BOX DIMENSIONS

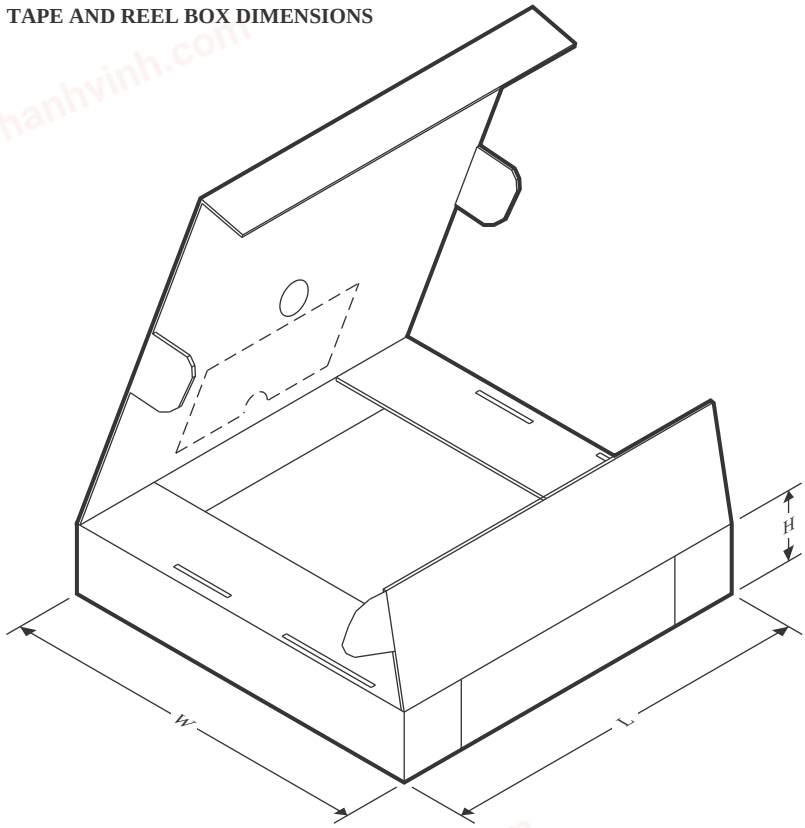


*All dimensions are nominal

| Device | Package Type | Package Drawing | Pins | SPQ | Length (mm) | Width (mm) | Height (mm) |
|---|---|---|---|---|---|---|---|
| SN74LVC1G08DBVR | SOT-23 | DBV | 5 | 3000 | 208.0 | 191.0 | 35.0 |
| SN74LVC1G08DBVR | SOT-23 | DBV | 5 | 3000 | 210.0 | 185.0 | 35.0 |
| SN74LVC1G08DBVR | SOT-23 | DBV | 5 | 3000 | 210.0 | 185.0 | 35.0 |
| SN74LVC1G08DBVR | SOT-23 | DBV | 5 | 3000 | 180.0 | 180.0 | 18.0 |
| SN74LVC1G08DBVR | SOT-23 | DBV | 5 | 3000 | 180.0 | 180.0 | 18.0 |
| SN74LVC1G08DBVR | SOT-23 | DBV | 5 | 3000 | 202.0 | 201.0 | 28.0 |
| SN74LVC1G08DBVRG4 | SOT-23 | DBV | 5 | 3000 | 180.0 | 180.0 | 18.0 |
| SN74LVC1G08DBVT | SOT-23 | DBV | 5 | 250 | 210.0 | 185.0 | 35.0 |
| SN74LVC1G08DBVT | SOT-23 | DBV | 5 | 250 | 202.0 | 201.0 | 28.0 |
| SN74LVC1G08DBVT | SOT-23 | DBV | 5 | 250 | 180.0 | 180.0 | 18.0 |
| SN74LVC1G08DBVT | SOT-23 | DBV | 5 | 250 | 210.0 | 185.0 | 35.0 |
| SN74LVC1G08DBVT | SOT-23 | DBV | 5 | 250 | 180.0 | 180.0 | 18.0 |
| SN74LVC1G08DBVT | SOT-23 | DBV | 5 | 250 | 180.0 | 180.0 | 18.0 |
| SN74LVC1G08DCKR | SC70 | DCK | 5 | 3000 | 180.0 | 180.0 | 18.0 |
| SN74LVC1G08DCKR | SC70 | DCK | 5 | 3000 | 202.0 | 201.0 | 28.0 |
| SN74LVC1G08DCKR | SC70 | DCK | 5 | 3000 | 210.0 | 185.0 | 35.0 |
| SN74LVC1G08DCKR | SC70 | DCK | 5 | 3000 | 180.0 | 180.0 | 18.0 |
| SN74LVC1G08DCKR | SC70 | DCK | 5 | 3000 | 180.0 | 180.0 | 18.0 |

chanhvinh.com

# PACKAGE MATERIALS INFORMATION



| Device | Package Type | Package Drawing | Pins | SPQ | Length (mm) | Width (mm) | Height (mm) |
|---|---|---|---|---|---|---|---|
| SN74LVC1G08DCKR | SC70 | DCK | 5 | 3000 | 208.0 | 191.0 | 35.0 |
| SN74LVC1G08DCKRG4 | SC70 | DCK | 5 | 3000 | 180.0 | 180.0 | 18.0 |
| SN74LVC1G08DCKT | SC70 | DCK | 5 | 250 | 180.0 | 180.0 | 18.0 |
| SN74LVC1G08DCKT | SC70 | DCK | 5 | 250 | 202.0 | 201.0 | 28.0 |
| SN74LVC1G08DCKT | SC70 | DCK | 5 | 250 | 180.0 | 180.0 | 18.0 |
| SN74LVC1G08DCKT | SC70 | DCK | 5 | 250 | 180.0 | 180.0 | 18.0 |
| SN74LVC1G08DCKTG4 | SC70 | DCK | 5 | 250 | 180.0 | 180.0 | 18.0 |
| SN74LVC1G08DPWR | X2SON | DPW | 5 | 3000 | 205.0 | 200.0 | 33.0 |
| SN74LVC1G08DRLR | SOT-5X3 | DRL | 5 | 4000 | 202.0 | 201.0 | 28.0 |
| SN74LVC1G08DRY2 | SON | DRY | 6 | 5000 | 202.0 | 201.0 | 28.0 |
| SN74LVC1G08DRY2 | SON | DRY | 6 | 5000 | 184.0 | 184.0 | 19.0 |
| SN74LVC1G08DRYR | SON | DRY | 6 | 5000 | 184.0 | 184.0 | 19.0 |
| SN74LVC1G08DRYRG4 | SON | DRY | 6 | 5000 | 184.0 | 184.0 | 19.0 |
| SN74LVC1G08DSF2 | SON | DSF | 6 | 5000 | 202.0 | 201.0 | 28.0 |
| SN74LVC1G08DSF2 | SON | DSF | 6 | 5000 | 184.0 | 184.0 | 19.0 |
| SN74LVC1G08DSFR | SON | DSF | 6 | 5000 | 210.0 | 185.0 | 35.0 |
| SN74LVC1G08DSFR | SON | DSF | 6 | 5000 | 202.0 | 201.0 | 28.0 |
| SN74LVC1G08DSFR | SON | DSF | 6 | 5000 | 184.0 | 184.0 | 19.0 |
| SN74LVC1G08DSFRG4 | SON | DSF | 6 | 5000 | 210.0 | 185.0 | 35.0 |
| SN74LVC1G08YZPR | DSBGA | YZP | 5 | 3000 | 182.0 | 182.0 | 20.0 |

chanhvinh.com

# GENERIC PACKAGE VIEW

## DPW 5 X2SON - 0.4 mm max height

PLASTIC SMALL OUTLINE - NO LEAD




Images above are just a representation of the package family, actual package may vary.
Refer to the product data sheet for package details.

4211218-3/D

chanhvinh.com

# PACKAGE OUTLINE

## DPW0005A

## X2SON - 0.4 mm max height

PLASTIC SMALL OUTLINE - NO LEAD

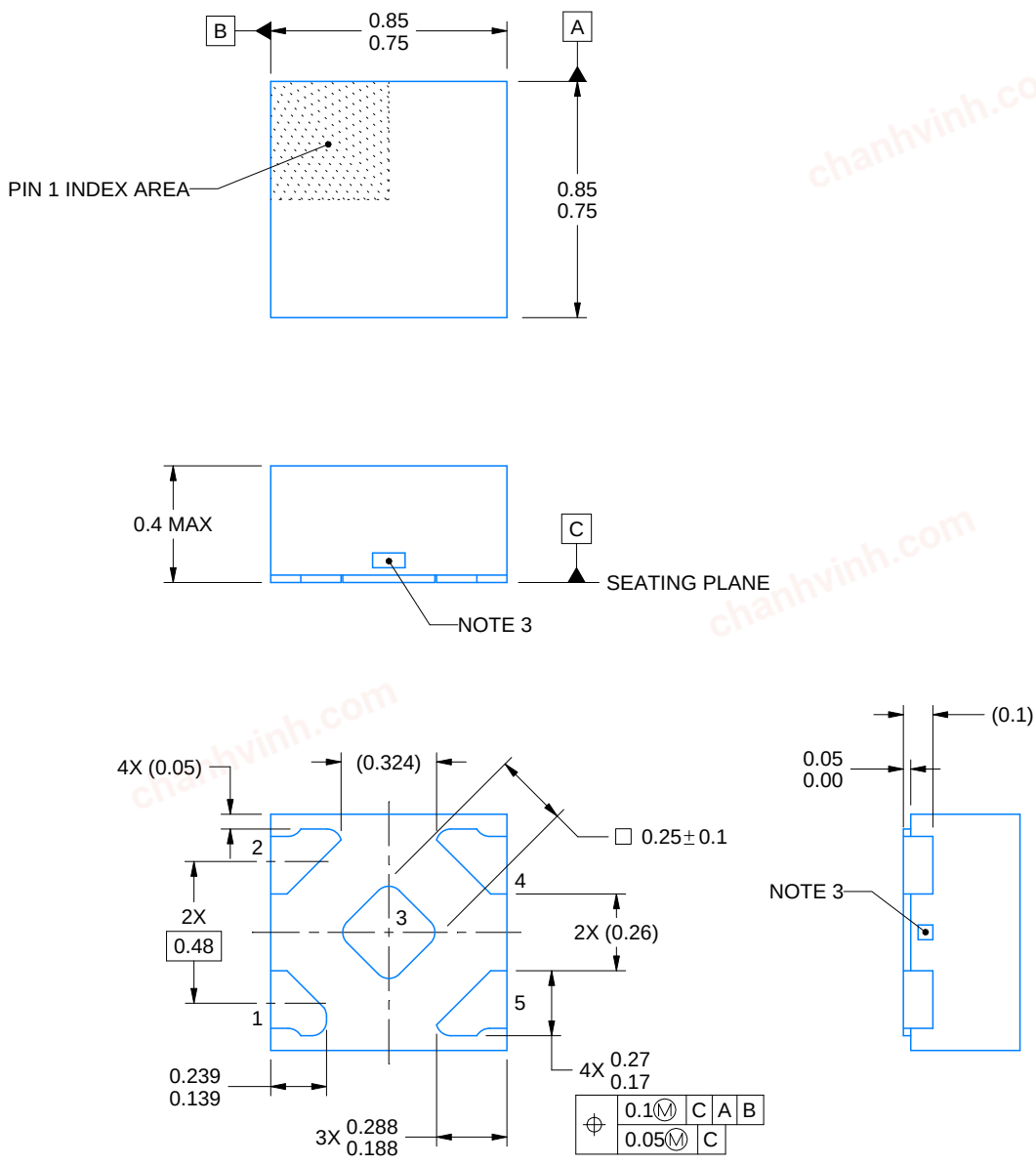


4223102/D 03/2022

NOTES:

1. All linear dimensions are in millimeters. Any dimensions in parenthesis are for reference only. Dimensioning and tolerancing per ASME Y14.5M.
2. This drawing is subject to change without notice.
3. The size and shape of this feature may vary.

chanhvinh.com

# EXAMPLE BOARD LAYOUT

## DPW0005A

### X2SON - 0.4 mm max height

PLASTIC SMALL OUTLINE - NO LEAD

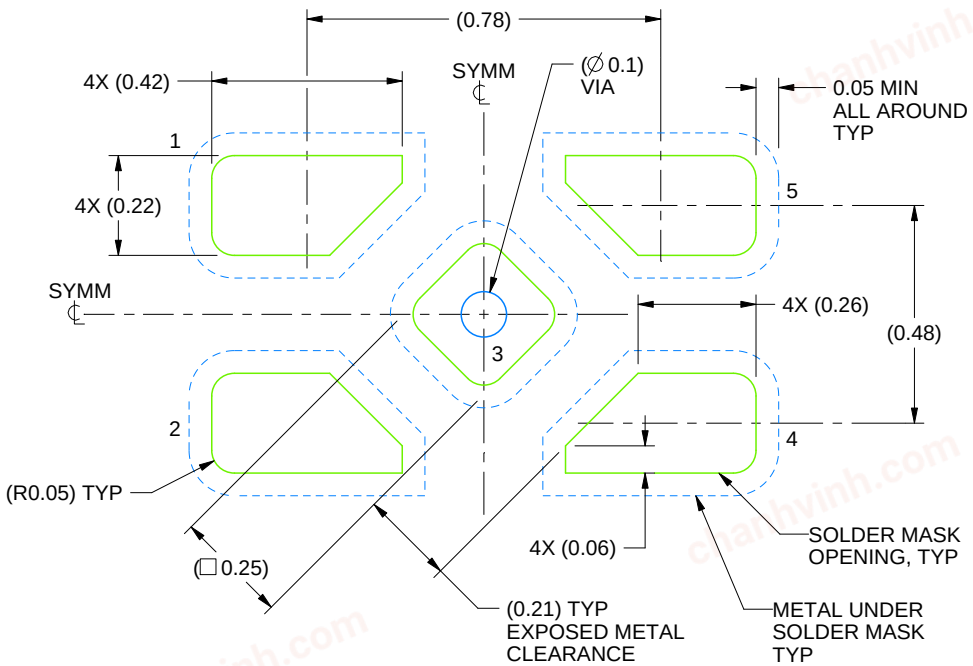


LAND PATTERN EXAMPLE
SOLDER MASK DEFINED
SCALE:60X

4223102/D 03/2022

NOTES: (continued)

4. This package is designed to be soldered to a thermal pad on the board. For more information, refer to QFN/SON PCB application note in literature No. SLUA271 (www.ti.com/lit/slua271).

chanhvinh.com

# EXAMPLE STENCIL DESIGN

## DPW0005A

## X2SON - 0.4 mm max height

PLASTIC SMALL OUTLINE - NO LEAD

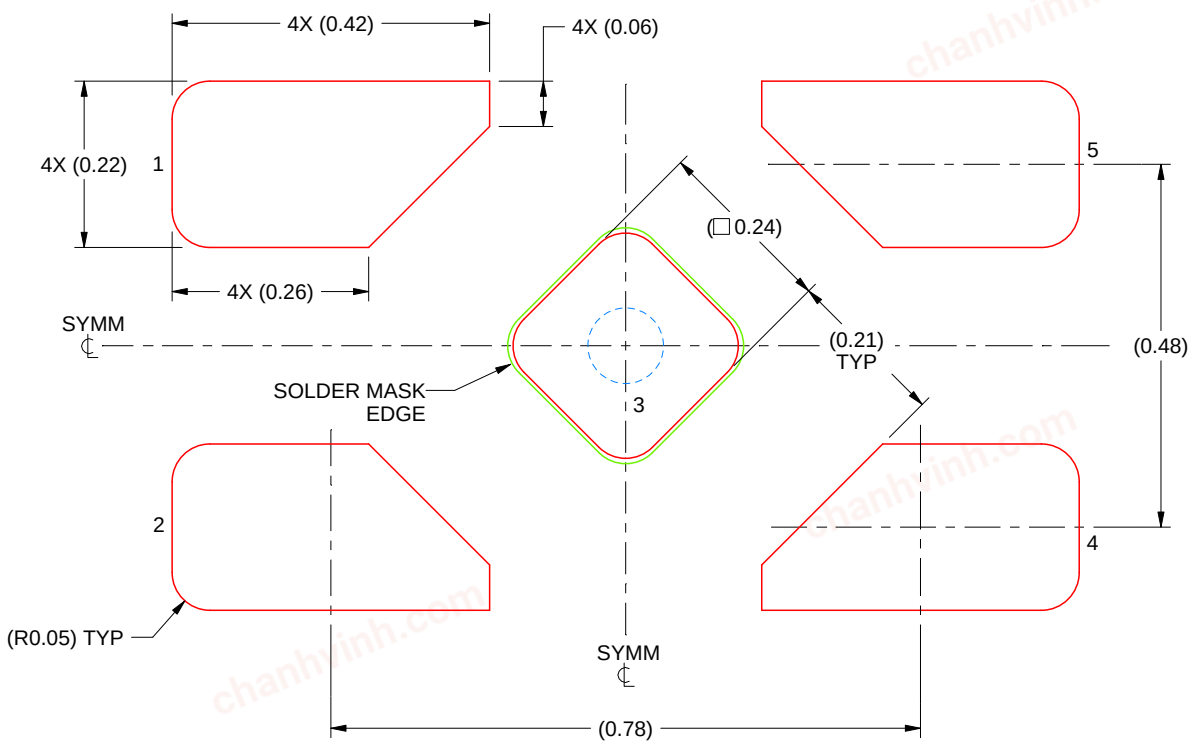


SOLDER PASTE EXAMPLE
BASED ON 0.1 mm THICK STENCIL

EXPOSED PAD 3
92% PRINTED SOLDER COVERAGE BY AREA UNDER PACKAGE
SCALE:100X

4223102/D 03/2022

NOTES: (continued)

5. Laser cutting apertures with trapezoidal walls and rounded corners may offer better paste release. IPC-7525 may have alternate design recommendations.

chanhvinh.com

# PACKAGE OUTLINE

## YZP0005

## DSBGA - 0.5 mm max height

DIE SIZE BALL GRID ARRAY

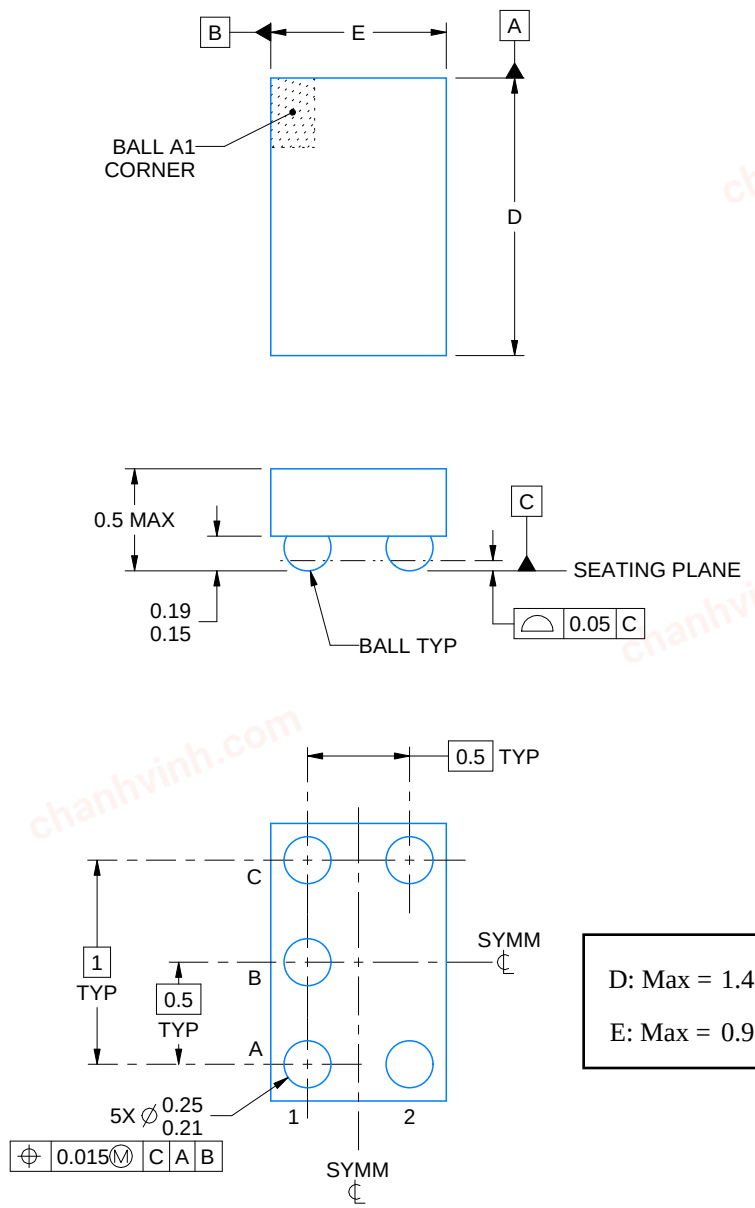


D: Max = 1.418 mm, Min =1.358 mm

E: Max = 0.918 mm, Min =0.858 mm

4219492/A 05/2017

NOTES:

1. All linear dimensions are in millimeters. Any dimensions in parenthesis are for reference only. Dimensioning and tolerancing per ASME Y14.5M.
2. This drawing is subject to change without notice.

chanhvinh.com

# EXAMPLE BOARD LAYOUT

## YZP0005

### DSBGA - 0.5 mm max height

DIE SIZE BALL GRID ARRAY

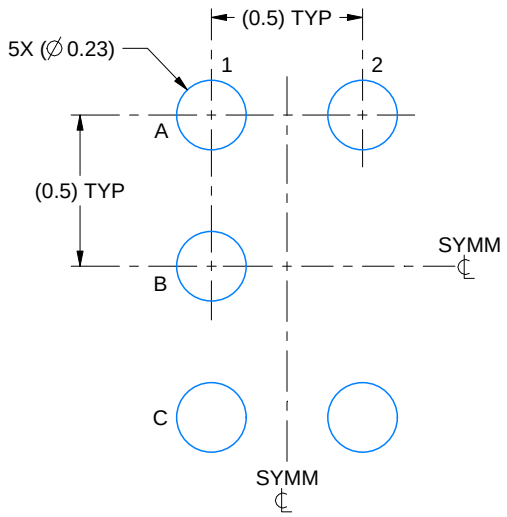


LAND PATTERN EXAMPLE
SCALE:40X

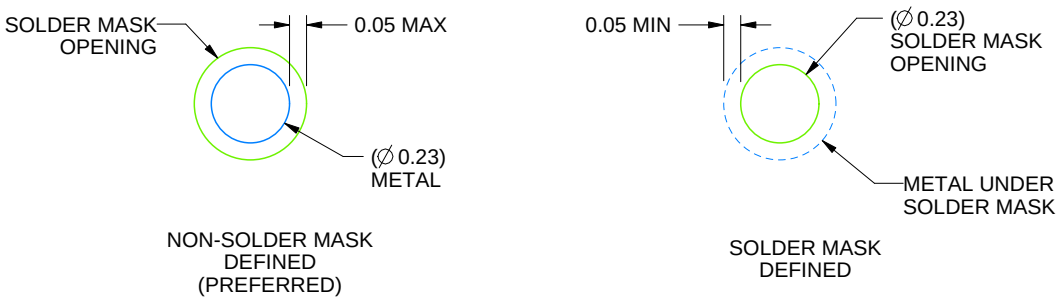


SOLDER MASK DETAILS
NOT TO SCALE

4219492/A 05/2017

NOTES: (continued)

3. Final dimensions may vary due to manufacturing tolerance considerations and also routing constraints. For more information, see Texas Instruments literature number SNVA009 (www.ti.com/lit/snva009).

chanhvinh.com

# EXAMPLE STENCIL DESIGN

## YZP0005

## DSBGA - 0.5 mm max height

DIE SIZE BALL GRID ARRAY

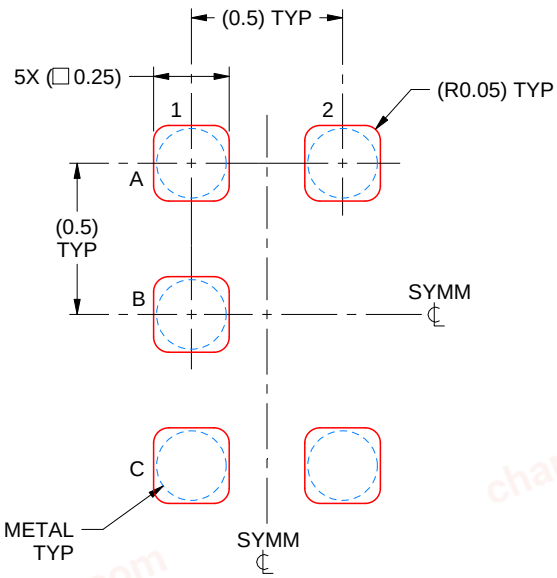


SOLDER PASTE EXAMPLE
BASED ON 0.1 mm THICK STENCIL
SCALE:40X

4219492/A 05/2017

NOTES: (continued)

4. Laser cutting apertures with trapezoidal walls and rounded corners may offer better paste release.

chanhvinh.com

# PACKAGE OUTLINE

## DCK0005A

## SOT - 1.1 max height

SMALL OUTLINE TRANSISTOR

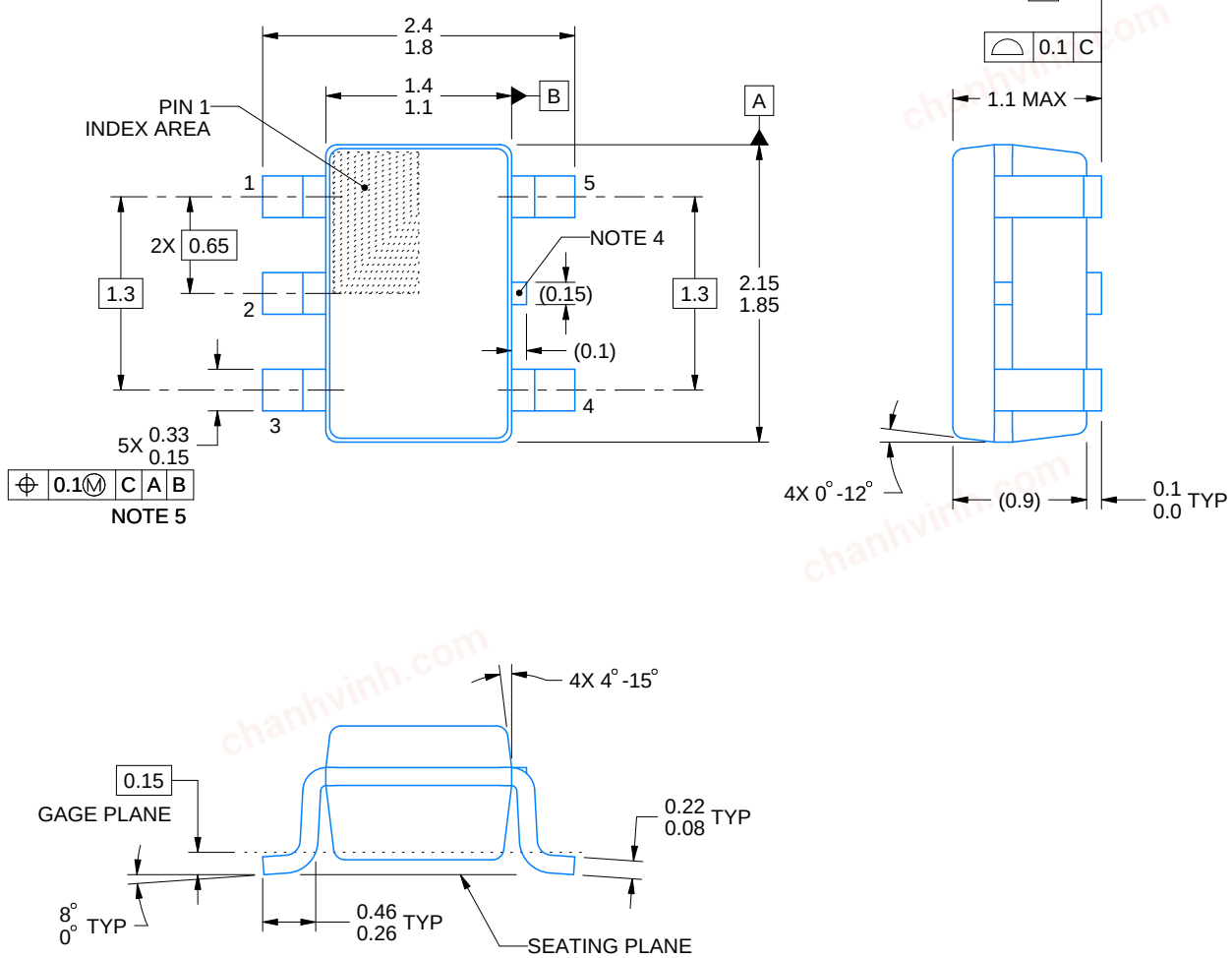


4214834/G 11/2024

NOTES:

1. All linear dimensions are in millimeters. Any dimensions in parenthesis are for reference only. Dimensioning and tolerancing per ASME Y14.5M.
2. This drawing is subject to change without notice.
3. Refernce JEDEC MO-203.
4. Support pin may differ or may not be present.
5. Lead width does not comply with JEDEC.
6. Body dimensions do not include mold flash, protrusions, or gate burrs. Mold flash, protrusions, or gate burrs shall not exceed 0.25mm per side

chanhvinh.com

# EXAMPLE BOARD LAYOUT

## DCK0005A

### SOT - 1.1 max height

SMALL OUTLINE TRANSISTOR

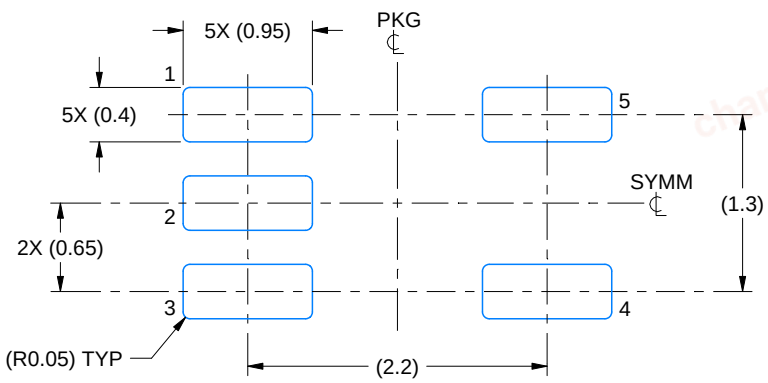


LAND PATTERN EXAMPLE
EXPOSED METAL SHOWN
SCALE:18X

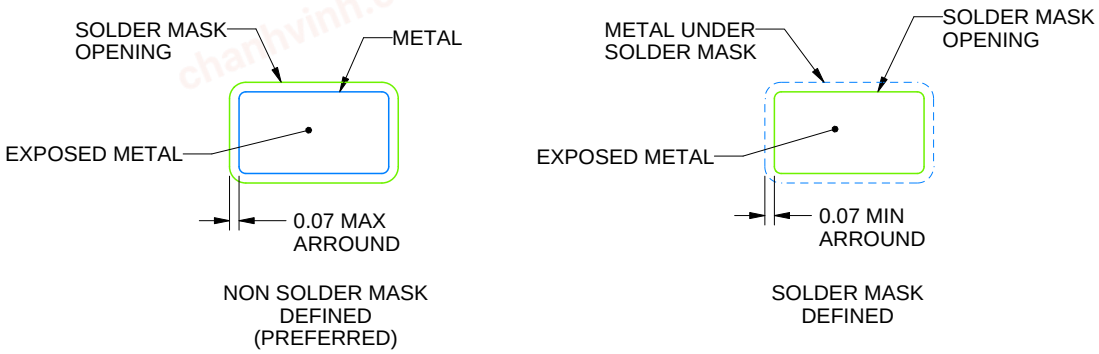


SOLDER MASK DETAILS

4214834/G 11/2024

NOTES: (continued)

7. Publication IPC-7351 may have alternate designs.
8. Solder mask tolerances between and around signal pads can vary based on board fabrication site.

chanhvinh.com

# EXAMPLE STENCIL DESIGN

## DCK0005A

## SOT - 1.1 max height

SMALL OUTLINE TRANSISTOR

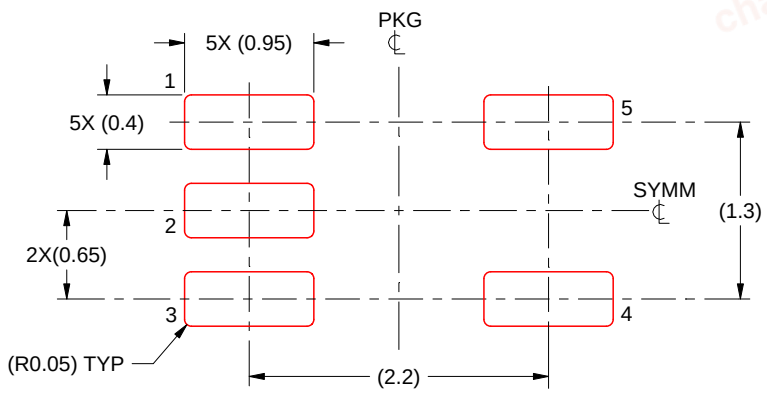


SOLDER PASTE EXAMPLE
BASED ON 0.125 THICK STENCIL
SCALE:18X

4214834/G 11/2024

NOTES: (continued)

9. Laser cutting apertures with trapezoidal walls and rounded corners may offer better paste release. IPC-7525 may have alternate design recommendations.
10. Board assembly site may have different recommendations for stencil design.

chanhvinh.com

# PACKAGE OUTLINE

## DBV0005A

## SOT-23 - 1.45 mm max height

SMALL OUTLINE TRANSISTOR

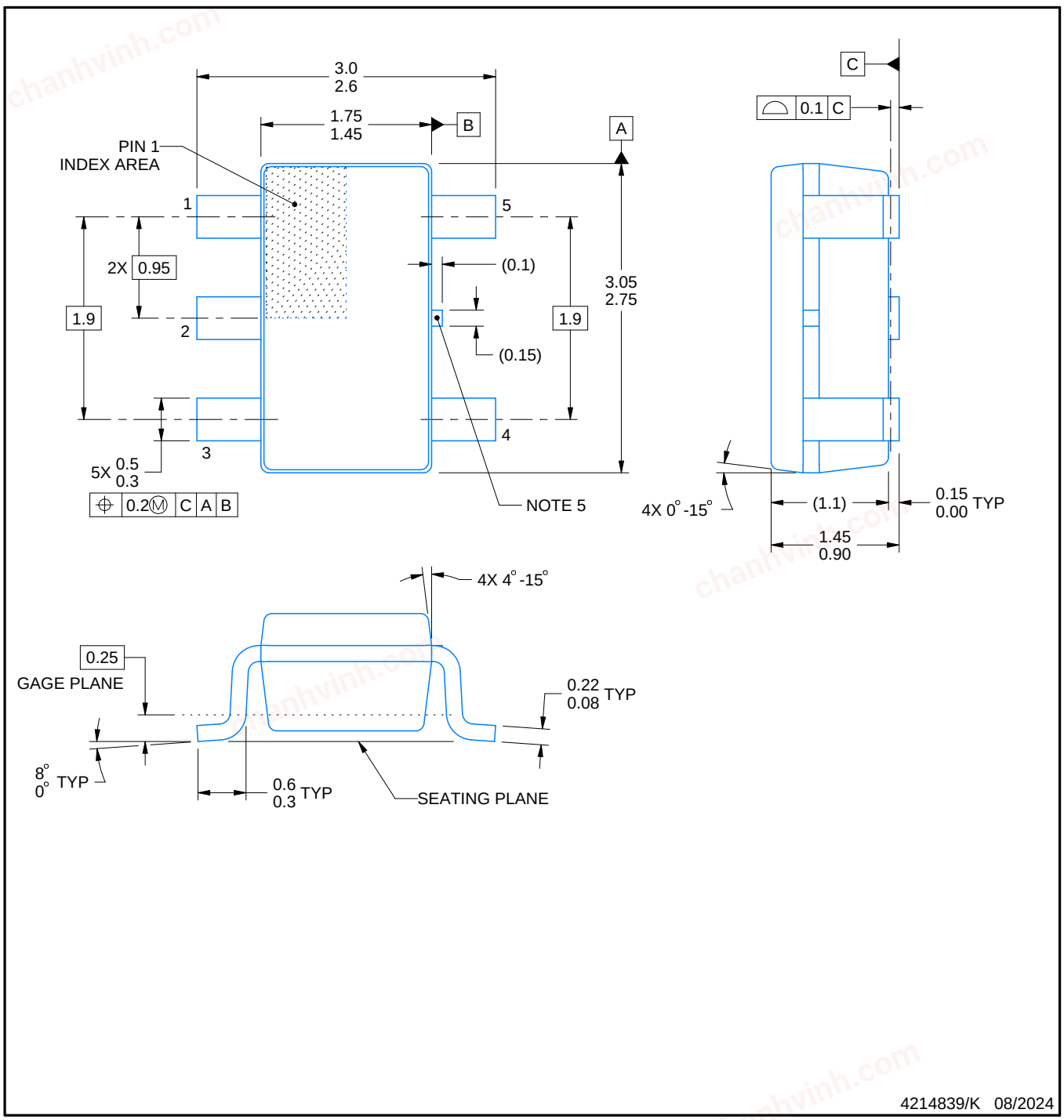


4214839/K 08/2024

NOTES:

1. All linear dimensions are in millimeters. Any dimensions in parenthesis are for reference only. Dimensioning and tolerancing per ASME Y14.5M.
2. This drawing is subject to change without notice.
3. Refernce JEDEC MO-178.
4. Body dimensions do not include mold flash, protrusions, or gate burrs. Mold flash, protrusions, or gate burrs shall not exceed 0.25 mm per side.
5. Support pin may differ or may not be present.

chanhvinh.com

# EXAMPLE BOARD LAYOUT

## DBV0005A

## SOT-23 - 1.45 mm max height

SMALL OUTLINE TRANSISTOR

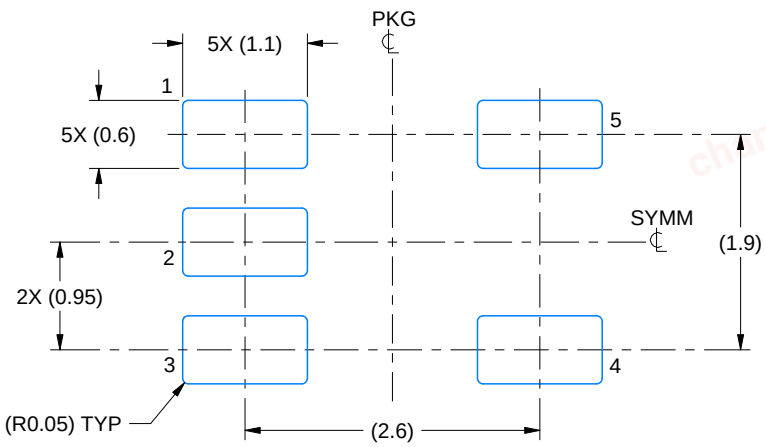


LAND PATTERN EXAMPLE
EXPOSED METAL SHOWN
SCALE:15X

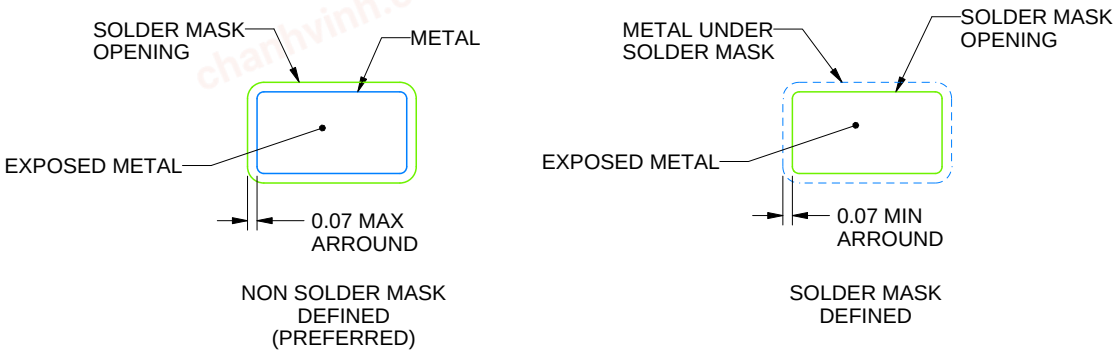


SOLDER MASK DETAILS

4214839/K 08/2024

NOTES: (continued)

6. Publication IPC-7351 may have alternate designs.
7. Solder mask tolerances between and around signal pads can vary based on board fabrication site.

chanhvinh.com

# EXAMPLE STENCIL DESIGN

## DBV0005A

## SOT-23 - 1.45 mm max height

SMALL OUTLINE TRANSISTOR

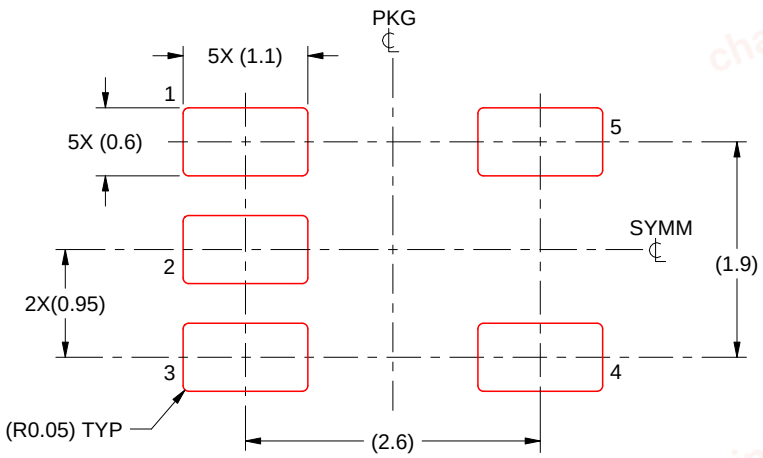


SOLDER PASTE EXAMPLE
BASED ON 0.125 mm THICK STENCIL
SCALE:15X

4214839/K 08/2024

NOTES: (continued)

8. Laser cutting apertures with trapezoidal walls and rounded corners may offer better paste release. IPC-7525 may have alternate design recommendations.
9. Board assembly site may have different recommendations for stencil design.

chanhvinh.com

# GENERIC PACKAGE VIEW

## DRY 6 USON - 0.6 mm max height

PLASTIC SMALL OUTLINE - NO LEAD




Images above are just a representation of the package family, actual package may vary.
Refer to the product data sheet for package details.

chanhvinh.com

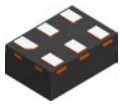

# PACKAGE OUTLINE

## DRY0006A

## USON - 0.6 mm max height

PLASTIC SMALL OUTLINE - NO LEAD

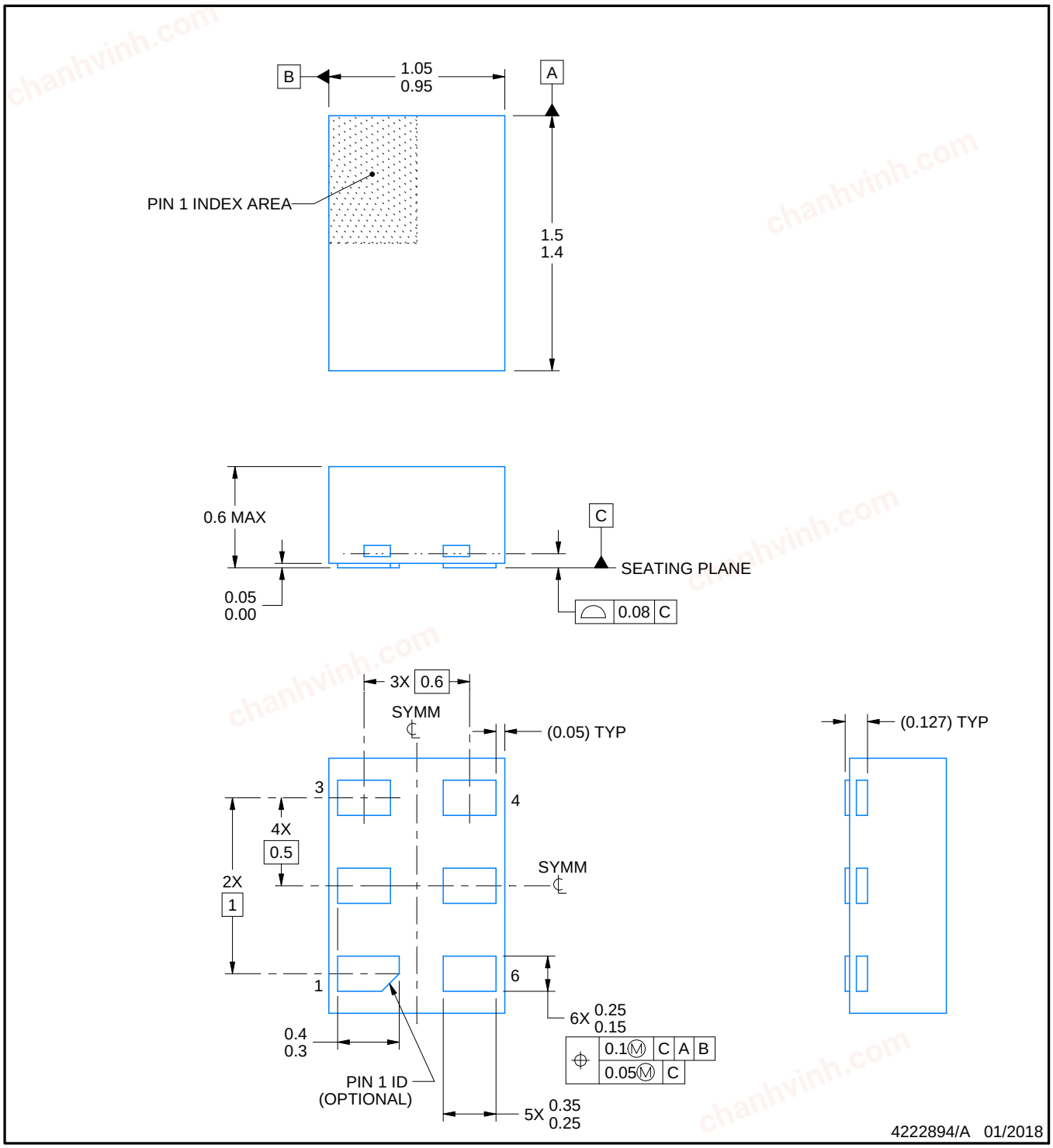


NOTES:

1. All linear dimensions are in millimeters. Any dimensions in parenthesis are for reference only. Dimensioning and tolerancing per ASME Y14.5M.
2. This drawing is subject to change without notice.

chanhvinh.com

# EXAMPLE BOARD LAYOUT

## DRY0006A

## USON - 0.6 mm max height

PLASTIC SMALL OUTLINE - NO LEAD

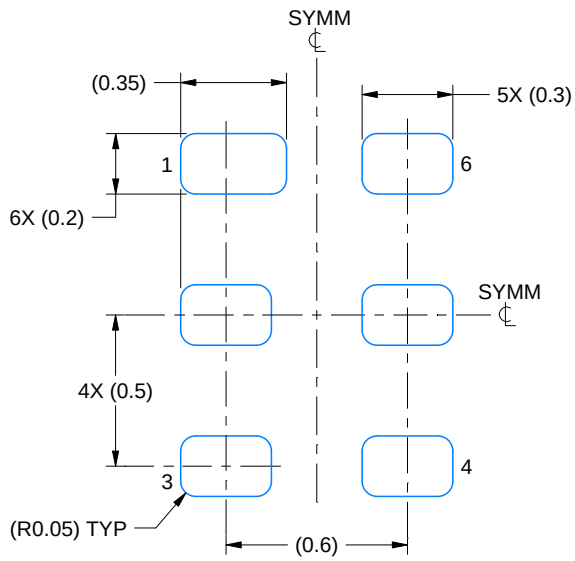


LAND PATTERN EXAMPLE
1:1 RATIO WITH PKG SOLDER PADS
EXPOSED METAL SHOWN
SCALE:40X

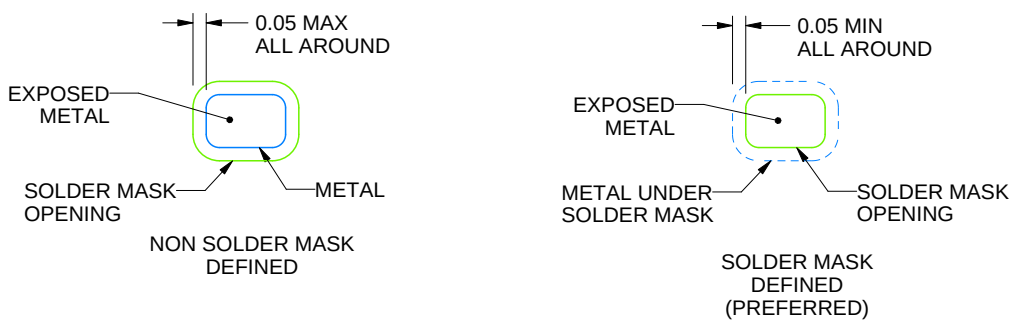


SOLDER MASK DETAILS

4222894/A 01/2018

NOTES: (continued)

3. For more information, see QFN/SON PCB application report in literature No. SLUA271 (www.ti.com/lit/slua271).

chanhvinh.com

# EXAMPLE STENCIL DESIGN

## DRY0006A

## USON - 0.6 mm max height

PLASTIC SMALL OUTLINE - NO LEAD

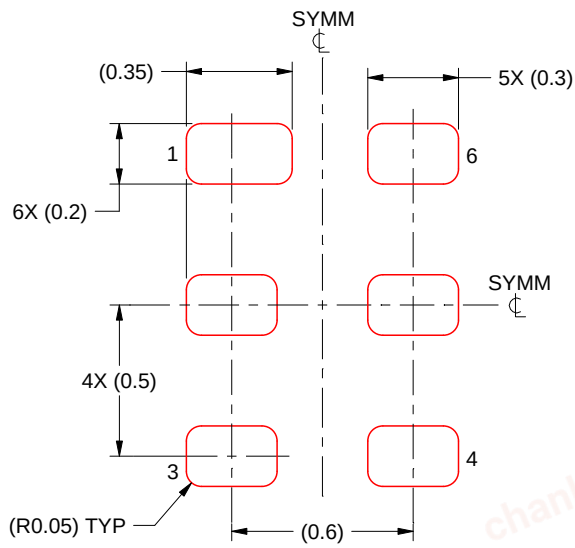


SOLDER PASTE EXAMPLE
BASED ON 0.075 - 0.1 mm THICK STENCIL
SCALE:40X

4222894/A 01/2018

NOTES: (continued)

4. Laser cutting apertures with trapezoidal walls and rounded corners may offer better paste release. IPC-7525 may have alternate design recommendations.

chanhvinh.com

# PACKAGE OUTLINE

## DSF0006A

## X2SON - 0.4 mm max height

PLASTIC SMALL OUTLINE - NO LEAD

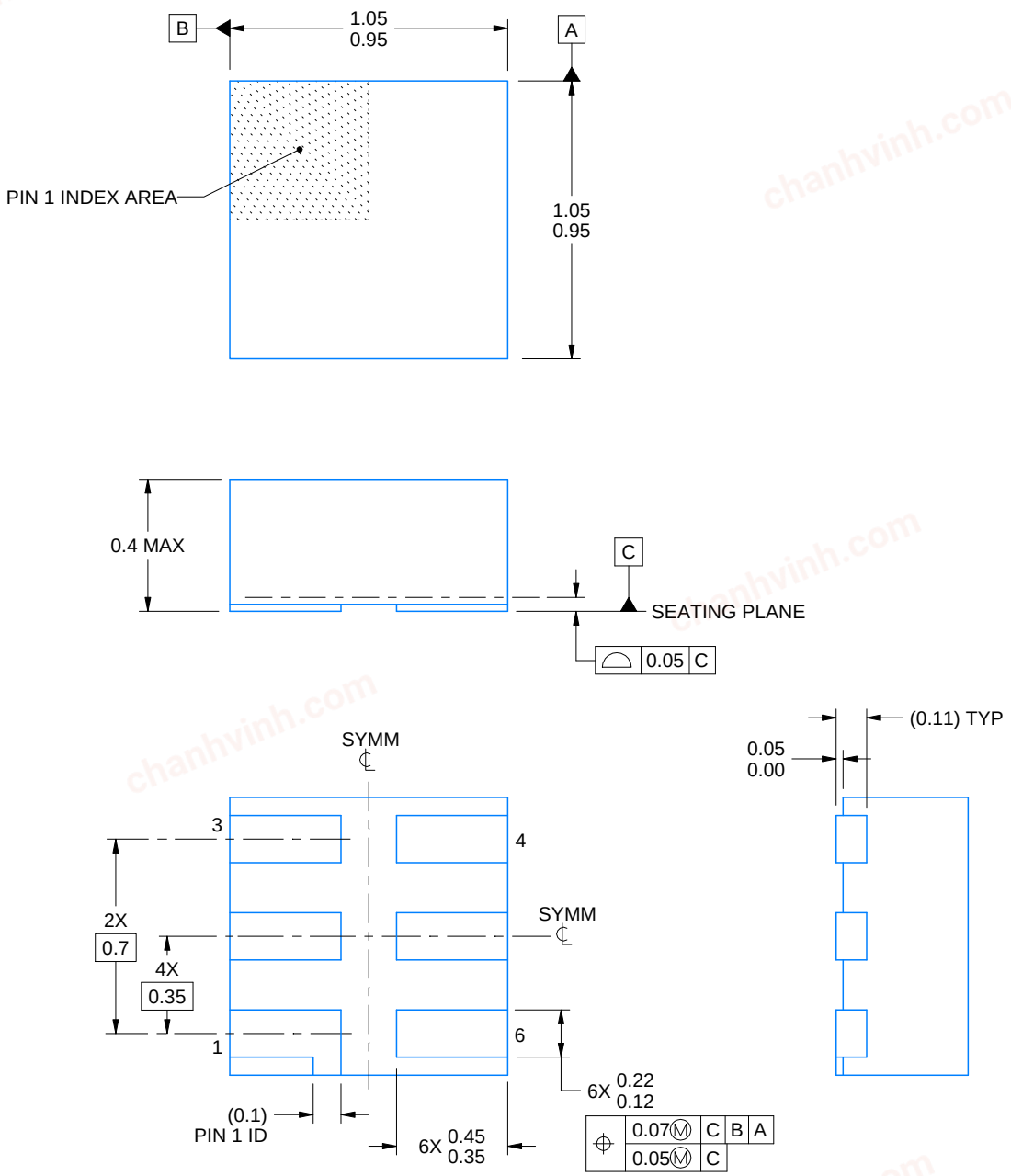


NOTES:

1. All linear dimensions are in millimeters. Any dimensions in parenthesis are for reference only. Dimensioning and tolerancing per ASME Y14.5M.
2. This drawing is subject to change without notice.
3. Reference JEDEC registration MO-287, variation X2AAF.

chanhvinh.com

# EXAMPLE BOARD LAYOUT

## DSF0006A

### X2SON - 0.4 mm max height

PLASTIC SMALL OUTLINE - NO LEAD

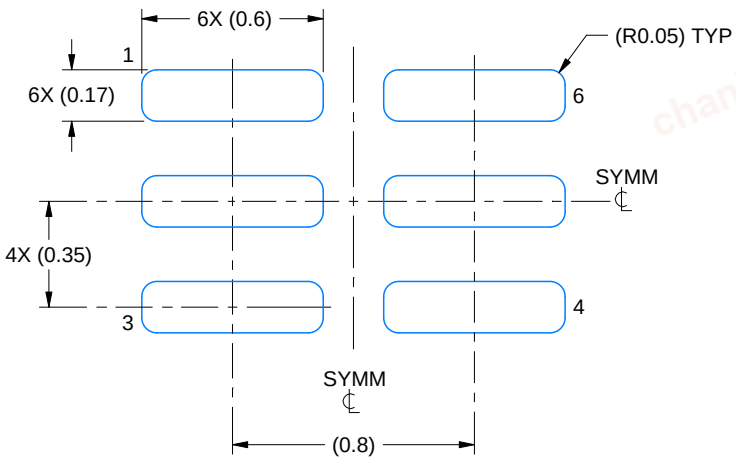


LAND PATTERN EXAMPLE
EXPOSED METAL SHOWN
SCALE:40X

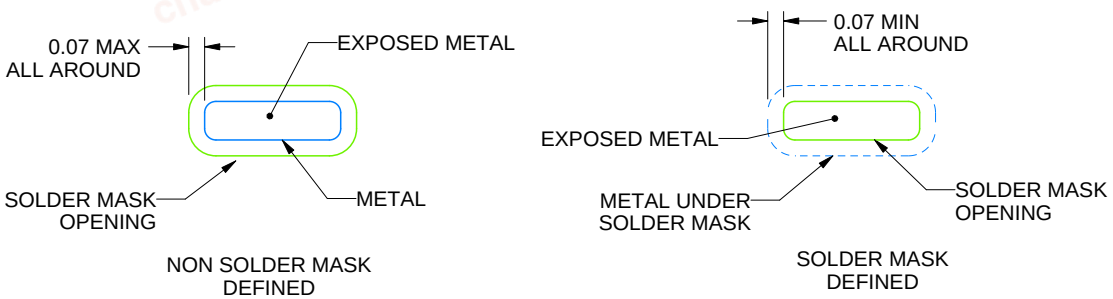


SOLDER MASK DETAILS

4220597/B 06/2022

NOTES: (continued)

4. For more information, see Texas Instruments literature number SLUA271 (www.ti.com/lit/slua271).

chanhvinh.com

# EXAMPLE STENCIL DESIGN

## DSF0006A

## X2SON - 0.4 mm max height

PLASTIC SMALL OUTLINE - NO LEAD

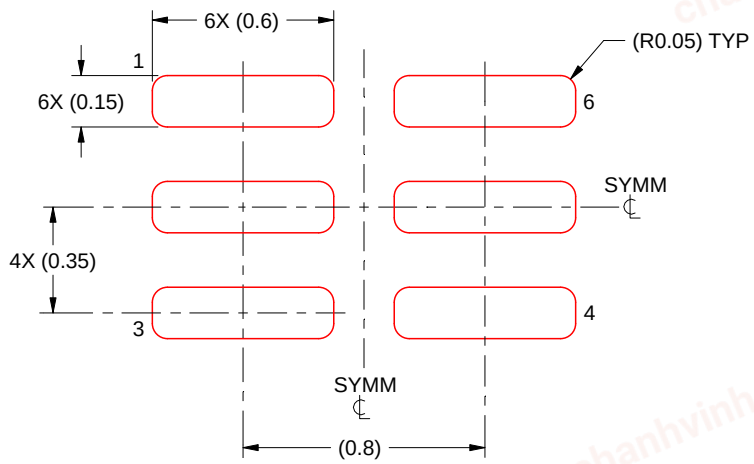


SOLDER PASTE EXAMPLE
BASED ON 0.09 mm THICK STENCIL

PRINTED SOLDER COVERAGE BY AREA UNDER PACKAGE
SCALE:40X

4220597/B 06/2022

4. Laser cutting apertures with trapezoidal walls and rounded corners may offer better paste release. IPC-7525 may have alternate design recommendations.

chanhvinh.com

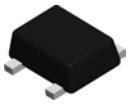

# PACKAGE OUTLINE

## DRL0005A

## SOT - 0.6 mm max height

PLASTIC SMALL OUTLINE

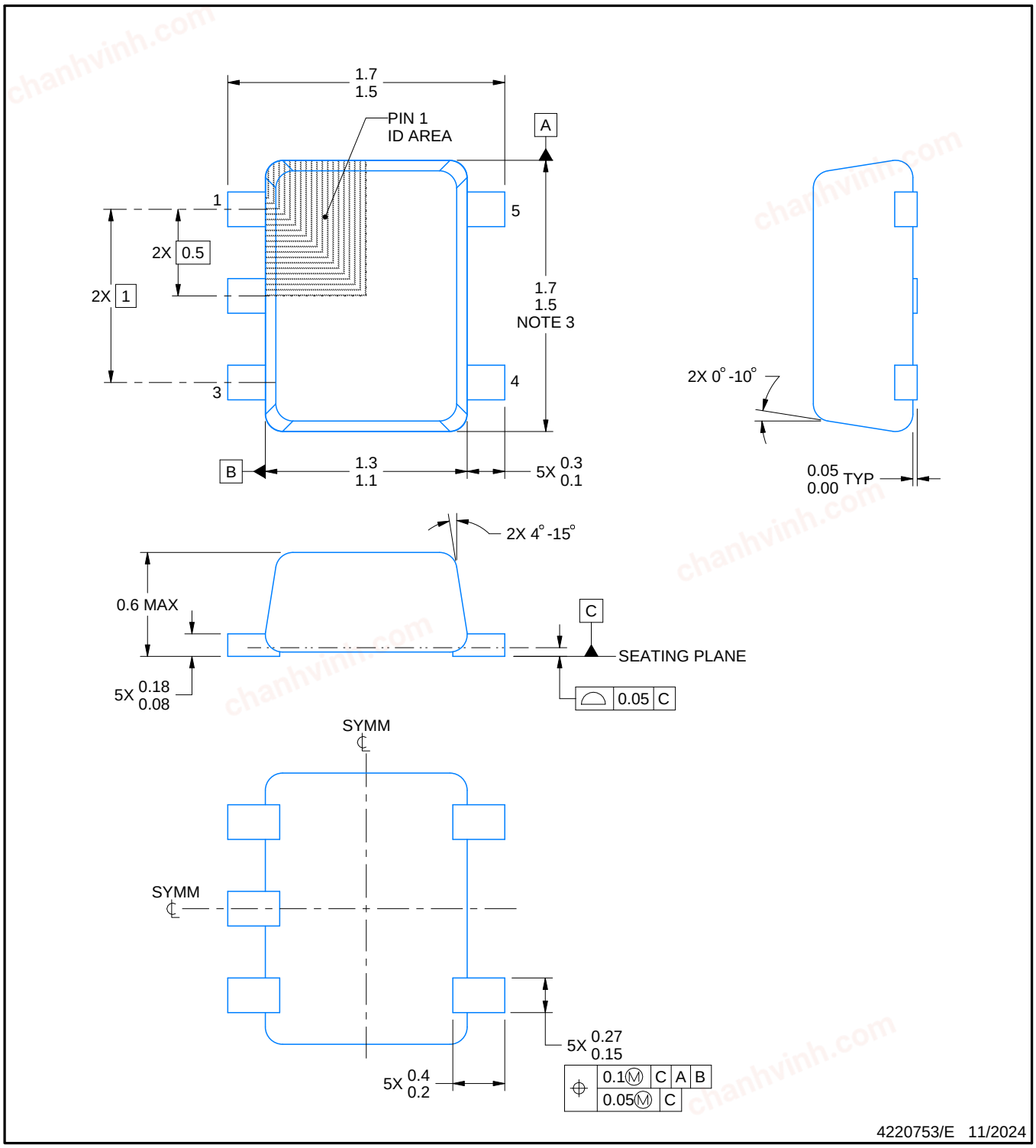


NOTES:

1. All linear dimensions are in millimeters. Any dimensions in parenthesis are for reference only. Dimensioning and tolerancing per ASME Y14.5M.
2. This drawing is subject to change without notice.
3. This dimension does not include mold flash, protrusions, or gate burrs. Mold flash, protrusions, or gate burrs shall not exceed 0.15 mm per side.
4. Reference JEDEC registration MO-293 Variation UAAD-1

chanhvinh.com

# EXAMPLE BOARD LAYOUT

## DRL0005A

### SOT - 0.6 mm max height

PLASTIC SMALL OUTLINE

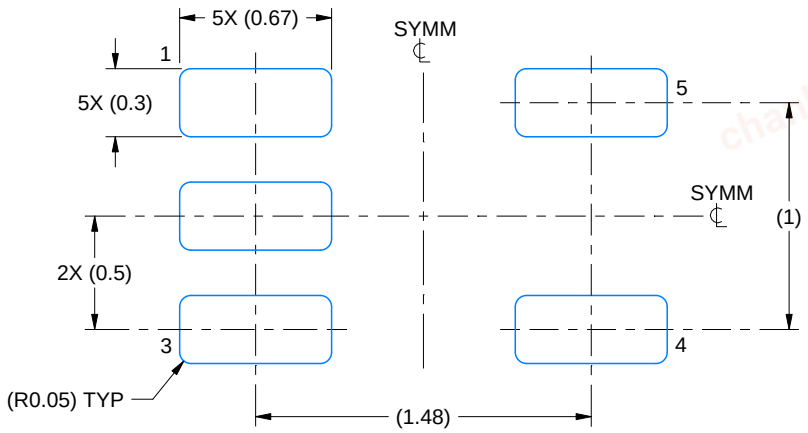


LAND PATTERN EXAMPLE
SCALE:30X

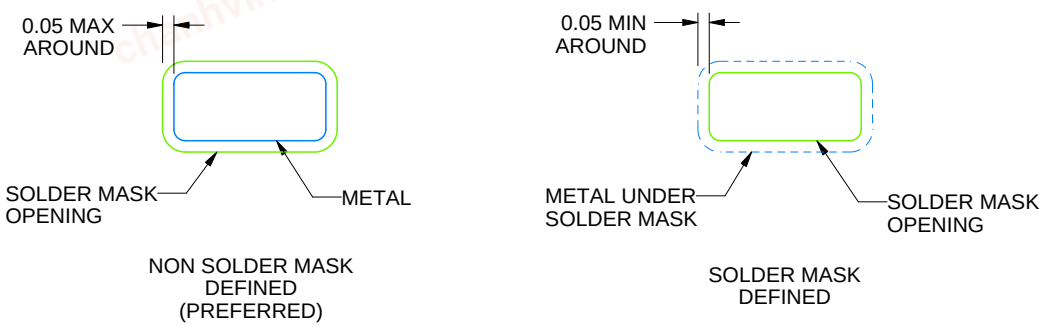


SOLDERMASK DETAILS

4220753/E 11/2024

NOTES: (continued)

5. Publication IPC-7351 may have alternate designs.
6. Solder mask tolerances between and around signal pads can vary based on board fabrication site.

chanhvinh.com

# EXAMPLE STENCIL DESIGN

## DRL0005A

## SOT - 0.6 mm max height

PLASTIC SMALL OUTLINE

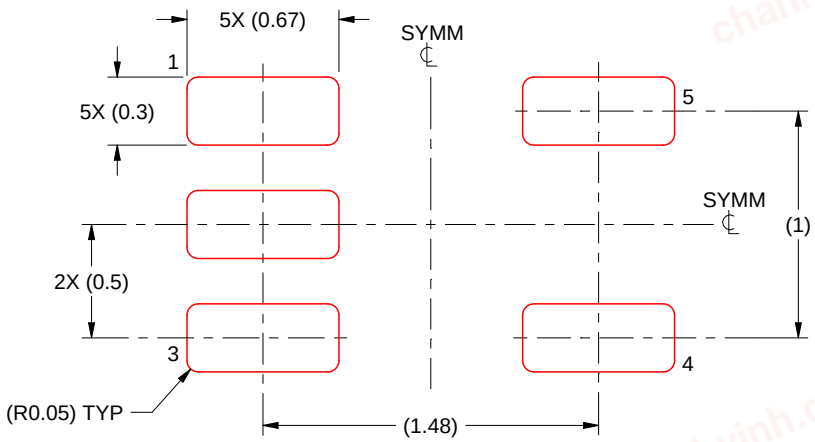


SOLDER PASTE EXAMPLE
BASED ON 0.1 mm THICK STENCIL
SCALE:30X

4220753/E 11/2024

NOTES: (continued)

7. Laser cutting apertures with trapezoidal walls and rounded corners may offer better paste release. IPC-7525 may have alternate design recommendations.
8. Board assembly site may have different recommendations for stencil design.

chanhvinh.com

# IMPORTANT NOTICE AND DISCLAIMER

TI PROVIDES TECHNICAL AND RELIABILITY DATA (INCLUDING DATASHEETS), DESIGN RESOURCES (INCLUDING REFERENCE DESIGNS), APPLICATION OR OTHER DESIGN ADVICE, WEB TOOLS, SAFETY INFORMATION, AND OTHER RESOURCES “AS IS” AND WITH ALL FAULTS, AND DISCLAIMS ALL WARRANTIES, EXPRESS AND IMPLIED, INCLUDING WITHOUT LIMITATION ANY IMPLIED WARRANTIES OF MERCHANTABILITY, FITNESS FOR A PARTICULAR PURPOSE OR NON-INFRINGEMENT OF THIRD PARTY INTELLECTUAL PROPERTY RIGHTS.

These resources are intended for skilled developers designing with TI products. You are solely responsible for (1) selecting the appropriate TI products for your application, (2) designing, validating and testing your application, and (3) ensuring your application meets applicable standards, and any other safety, security, regulatory or other requirements.

These resources are subject to change without notice. TI grants you permission to use these resources only for development of an application that uses the TI products described in the resource. Other reproduction and display of these resources is prohibited. No license is granted to any other TI intellectual property right or to any third party intellectual property right. TI disclaims responsibility for, and you fully indemnify TI and its representatives against any claims, damages, costs, losses, and liabilities arising out of your use of these resources.

TI’s products are provided subject to TI’s Terms of Sale, TI’s General Quality Guidelines, or other applicable terms available either on ti.com or provided in conjunction with such TI products. TI’s provision of these resources does not expand or otherwise alter TI’s applicable warranties or warranty disclaimers for TI products. Unless TI explicitly designates a product as custom or customer-specified, TI products are standard, catalog, general purpose devices.

TI objects to and rejects any additional or different terms you may propose.

Copyright © 2026, Texas Instruments Incorporated

Last updated 10/2025

chanhvinh.com