chanhvinh.com

Product data sheet
Characteristics

XCKS541
limit switch XCKS - th.plastic roller lever var. length - 1NC+1NO - slow - Pg13



Main

Range of product	OsiSense XC
Series name	Standard format
Product or component type	Limit switch
Device short name	XCKS
Sensor design	-
Body type	Fixed
Head type	Rotary head
Material	Plastic
Body material	Plastic
Head material	Plastic
Fixing mode	By the body
Movement of operating head	Rotary
Type of operator	Spring return roller lever thermoplastic variable length
Type of approach	Lateral approach, 1 or 2 programmable direction
Cable entry	1 entry tapped for Pg 13.5 cable gland, cable outer diameter: 9…12 mm
Number of poles	2
Contacts type and composition	1 NC + 1 NO
Contact operation	Slow-break, break before make

Complementary

Switch actuation	By 30° cam
Electrical connection	Screw-clamp terminals, clamping capacity: 1 x 0.5...2 x 2.5 mm²
Contacts insulation form	Zb
Number of steps	1
Positive opening	With
Minimum torque for tripping	0.89 lbf.in (0.1 N.m)
Minimum actuation speed	6 m/min
Maximum actuation speed	1.5 m/s
Contact code designation	A300, AC-15 (Ue = 240 V), Ie = 3 A conforming to EN/IEC 60947-5-1 appendix A Q300, DC-13 (Ue = 250 V), Ie = 0.27 A conforming to EN/IEC 60947-5-1 appendix A
[Ithe] conventional enclosed thermal current	10 A AC
[Ui] rated insulation voltage	300 VUL 508 500 V 3)IEC 60947-1 300 VCSA C22.2 No 14
Maximum resistance across terminals	25 MOhm IEC 60255-7 category 3
[Uimp] rated impulse withstand voltage	6 KV IEC 60664 6 kV IEC 60947-1
Short-circuit protection	10 A cartridge fuse, type gG
Electrical durability	5000000 Cycles, DC-13, inductive load type, 120 V, 4 W, operating rate <60 cyc/mn, load factor: 0.5 conforming to IEC 60947-5-1 appendix C 5000000 Cycles, DC-13, inductive load type, 24 V, 10 W, operating rate <60 cyc/mn, load factor: 0.5 conforming to IEC 60947-5-1 appendix C 5000000 cycles, DC-13, inductive load type, 48 V, 7 W, operating rate <60 cyc/mn, load factor: 0.5 conforming to IEC 60947-5-1 appendix C
Mechanical durability	20000000 cycles

The information provided in this documentation contains general descriptions and/or technical characteristics of the performance of the products contained herein.
This documentation is not intended as a substitute for and is not to be used for determining suitability or reliability of these products for specific user applications.
It is the duty of any such user or integrator to perform the appropriate and complete risk analysis, evaluation and testing of the products with respect to the relevant specific application or use thereof.
Neither Schneider Electric Industries SAS nor any of its affiliates or subsidiaries shall be responsible or liable for misuse of the information contained herein.

Maximum Width	1.57 in (40 mm)
Height	4.61…6.77 in (117…172 mm)
Depth	2.24 in (57 mm)
Net Weight	0.36 lb(US) (0.165 kg)
Terminals description ISO n°1	(13-14)NO (21-22)NC

Environment

Shock resistance	50 gn 11 ms IEC 60068-2-27
Vibration resistance	25 gn 10…500 Hz)IEC 60068-2-6
IP degree of protection	IP67 IEC 60529 IP66 IEC 60529
IK degree of protection	IK05 conforming to EN 50102
Electrical shock protection class	Class II IEC 61140 Class II NF C 20-030
Overvoltage category	Class II conforming to IEC 61140 Class II NF C 20-030
Ambient air temperature for operation	-13…158 °F (-25…70 °C)
Ambient air temperature for storage	-40…158 °F (-40…70 °C)
Protective treatment	TC
Product certifications	CCC CSA UL
Standards	CENELEC EN 50041 EN 60204-1 UL 508 CSA C22.2 No 14 EN 60947-5-1 IEC 60204-1 IEC 60947-5-1

Ordering and shipping details

Category	22417 - LIMIT SWITCH, IEC, CLASSIC
Discount Schedule	T
GTIN	03389110646962
Nbr. of units in pkg.	1
Package weight(Lbs)	0.36 lb(US) (0.16 kg)
Returnability	No
Country of origin	ID

Packing Units

Package 1 Height	0.400 dm
Package 1 width	1.300 dm
Package 1 Length	0.600 dm

Offer Sustainability

Sustainable offer status	Green Premium product
California proposition 65	WARNING: This product can expose you to chemicals including: Diisononyl phthalate (DINP), which is known to the State of California to cause cancer, and Di-isodecyl phthalate (DIDP), which is known to the State of California to cause birth defects or other reproductive harm. For more information go to www.P65Warnings.ca.gov
REACh Regulation	REACh Declaration
EU RoHS Directive	Pro-active compliance (Product out of EU RoHS legal scope) EU RoHS Declaration
Environmental Disclosure	Product Environmental Profile
Circularity Profile	End Of Life Information

chanhvinh.com

Contractual warranty

Warranty	18 months

chanhvinh.com

chanhvinh.com

Product data sheet XCKS541

Dimensions Drawings

Dimensions

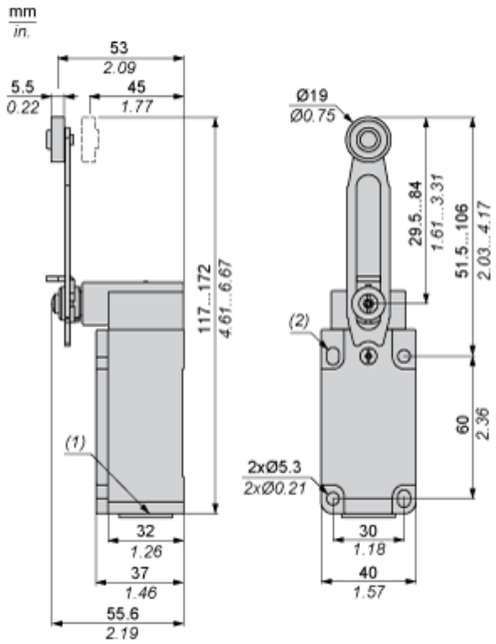

(1) 1 tapped entry for Pg 13.5 cable gland
(2) 2 elongated holes Ø 5.3 x 7.3.

Life Is On Schneider Electric

chanhvinh.com

Product data sheet XCKS541
Mounting and Clearance

Mounting with Cable Entry

Position of Cable Gland

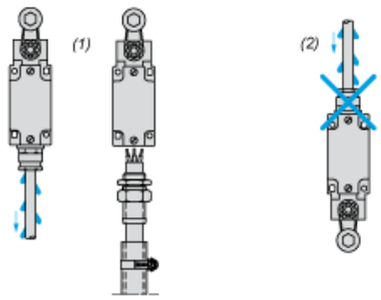

(1) Recommended
(2) To be avoided

Mounting with Rotary Heads and Levers

Type of Cam

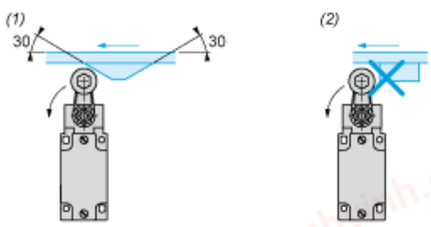

(1) Recommended
(2) To be avoided

Setting-up

Head Rotation Adjustment

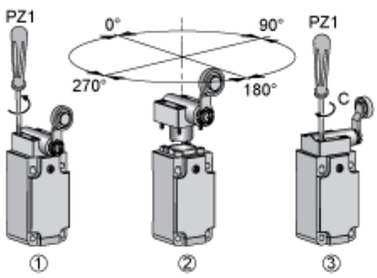

C : 1 Nm (+/- 20%) / 8.85 lb-in (+/- 20%)

Setting-up

chanhvinh.com

Lever Angle Adjustment

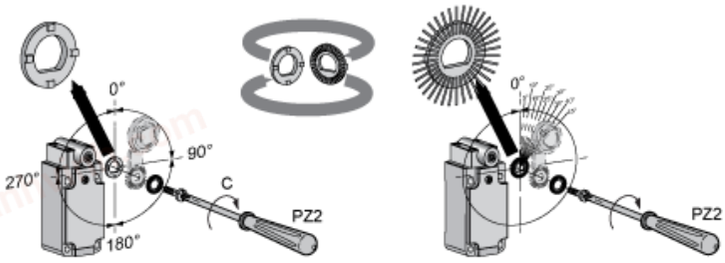

C : 1 Nm (+/- 20%) / 8.85 lb-in (+/- 20%)

Setting-up with Head ZCKD05

Direction of Actuation Programming

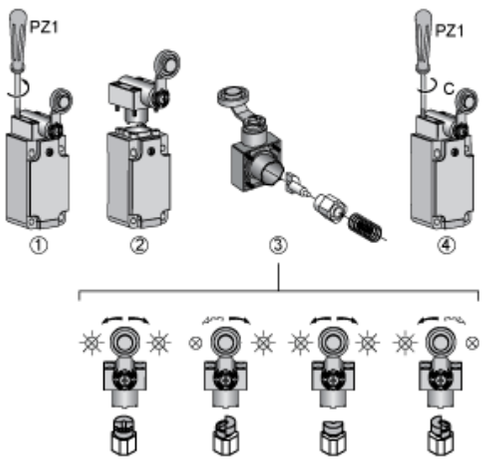

C : 1 Nm (+/- 20%) / 8.85 lb-in (+/- 20%)

Life Is On Schneider Electric

chanhvinh.com

Product data sheet
Connections and Schema

XCKS541

Wiring Diagram

2-pole NC + NO Break Before Make, Slow Break



chanhvinh.com

Product data sheet
Technical Description

XCKS541

Characteristics of Actuation

Switch Actuation by 30° Cam

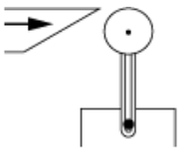

Functionnal Diagram

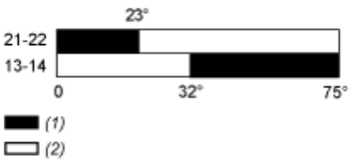

(1) Closed
(2) Open

Life Is On Schneider Electric