chanhvinh.com

M8/M12 CONNECTOR SYSTEM









chanhvinh.com

TE CONNECTIVITY'S M8 / M12

Connector System for machine industrial automation and control applications provides a solution for the increasing needs of sensor connections that safely and reliably secure the communication in industrial environments. This connector system also finds applications outside of its traditional industries where a compact reliable connection system with environmental protection is required. TE Connectivity (TE) solution includes an extensive connector range of PCB headers, cable assemblies and I/O boxes, and provides users with an interface that supports higher bandwidth needs – meeting the requirements of up to 10Gb/s.

TE also offers shielded and un-shielded Cat5e and Cat6A cable assembly variants. A predefined offering in length of 1, 3, 5 and 10 meters covers a vast range of customer needs on the market. For rewiring on site a wide range of field serviceable connectors are provided, allowing versatile systems to be quickly and easily established. Additional styles are available on request including alternative mounting arrangements for panel mount connectors and double ended cable assemblies.



TE'S INDUSTRIAL COMMUNICATIONS PRODUCTS PLAY A VITAL ROLE IN FACTORY AUTOMATION.

TE's industrial communications products are widespread throughout today's networked factories, and play a critical role in driving the efficiency of many manufacturing processes.
Used extensively in material handling equipment, our industrial communications solutions are also found throughout the automotive and food and beverage industries, as well as in the many manufacturing applications of industrial robots.
With the development of smaller industrial ethernet products, TE's solutions are also excellent for vision systems, common in security equipment and mail sortation devices.

chanhvinh.com

TE M8/M12 CONNECTOR SYSTEM – APPLICATIONS

MACHINERY



FACTORY AUTOMATION



TE's M8/M12 Connector System includes a broad range of straight, angled, LED and multi-position field installable and board connectors that are easily intermateable. Next to cable assemblies for serial and bus communication, TE also offers industrial ethernet patch cables with overmolded X-coded M12 connectors that are available for future proof applications with up to 10 Gb/s data transmission. Customized cable assemblies offer a solution for your specific needs in different lengths, temperatures or flexibility. When communication simply needs to work in industrial environments, TE's M8/M12 system and broad industrial communications portfolio offer time-tested reliability that meet industry standards. Whether it is for controllers and sensors or robotics and molding machines, the M8/M12 connector system offers you a solution that is time-saving, error reduced and without the use of tools.

chanhvinh.com

Table of Content

M8/M12 Connectors	Page 8
TE Part Number Definition	Page 9
M8 Straight Field Installable	Page 12
M8 Angled Field Installable	Page 13
M8 Panel Mount R/A PCB	Page 14
M8 Panel Mount Straight PCB	Page 15
M8 Panel Mount Solder Wire	Page 16
M8 Panel Mount 200mm Wire	Page 17
M12 Straight Field Installable A, B, D Coded	Page 18
M12 Panel Mount R/A PCB	Page 22
M12 Panel Mount Straight PCB – Rear Mounting	Page 24
M12 Panel Mount Straight PCB – Front Mounting	Page 25
M12 Panel Mount Solder Wire – Rear Mounting	Page 26
M12 Panel Mount Solder Wire – Front Mounting	Page 27
M12 Panel Mount 200mm Wire – Front Mounting	Page 28
M12 Panel Mount 200mm Wire – Rear Mounting	Page 29
M12 Power Solutions	Page 30
M12 S, T Coded	Page 32
M12 X-Coded	Page 31
Accessories	Page 32
Sensor/Actuator M8/M12 A-Code Cable Assemblies	Page 35
M8 3-4Pos Single Ended Cable Assemblies	Page 40
M12 A-Code 2-8Pos Single Ended Cable Assemblies	Page 38
M8 3-4Pos Double Ended Cable Assemblies	Page 43
M12 A-Code 2-8Pos Double Ended Cable Assemblies	Page 41
M8 To M12 A-Code 3-4Pos Double Ended Cable Assemblies	Page 44
M8 Cable Specifications	Page 47
M12 Cable Specifications	Page 48

Table of Content

M12 Fieldbus Cable Assembly Connectivity (Profibus, DeviceNet / CanOpen, CC Link)	Page 49
M12 CC-Link A-Code 4Pos Cable Assemblies Single Ended PVC	Page 51
M12 CC-Link A-Code 4Pos Cable Assemblies Double Ended PVC	Page 51
M12 Devicenet A-Code 5Pos Cable Assemblies Single Ended PUR	Page 52
M12 Devicenet A-Code 5Pos Cable Assemblies Double Ended PUR	Page 52
M12 Devicenet A-Code 5Pos Cable Assemblies Single Ended PVC	Page 52
M12 Devicenet A-Code 5Pos Cable Assemblies Double Ended PVC	Page 52
M12 Profibus B-Code 2Pos Cable Assemblies Single Ended PUR Torsion	Page 53
M12 Profibus B-Code 2Pos Cable Assemblies Double Ended PUR Torsion	Page 53
M12 Profibus B-Code 2Pos Cable Assemblies Single Ended PUR Flex/Drag Chain	Page 53
M12 Profibus B-Code 2Pos Cable Assemblies Double Ended PUR Flex/Drag Chain	Page 54
M12 Industrial Ethernet D-Code Cable Assembly Connectivity	Page 55
M12 Ethernet D-Code 4Pos Cable Assemblies Single Ended Type C PUR	Page 57
M12 Ethernet D-Code 4Pos Cable Assemblies Double Ended Type C PUR	Page 57
M12 Ethernet D-Code 4Pos Cable Assemblies Single Ended Type B FRNC	Page 60
M12 Ethernet D-Code 4Pos Cable Assemblies Double Ended Type B FRNC	Page 60
M12 Ethernet D-Code 4Pos Cable Assemblies Single Ended Type B PVC	Page 60
M12 Ethernet D-Code 4Pos Cable Assemblies Double Ended Type B PVC	Page 60
M12 Ethernet D-Code 4Pos Cable Assemblies Single Ended Type B PVC Red	Page 61
M12 Ethernet D-Code 4Pos Cable Assemblies Double Ended Type B PVC Red	Page 61
M12 X-Code Cordsets And M12 X-Code To Rj45 Cordsets	Page 67
M12 X-Code 8pos Single & Double Ended Tpe Cable Assemblies	Page 72
M12 X-Code 8pos Single & Double Ended Pur & Pvc Cable Assemblies	Page 73
M12 L-Code Cable Assemblies	Page 74

chanhvinh.com

M8/M12 CONNECTORS

TE's M8/M12 connectors continues to fill the ongoing needs for sensor connection in industrial machinery and factory automation. A connection standard for many years, these products also find applications outside of their traditional industries where a compact reliable connection system with environmental protection is required. TE's M8/M12 connector portfolio includes A, B, D, S, T, and X-coded (up to 10 Gb/s) versions to serve various customer needs.

The connectors are also available in shielded and unshielded versions, to support Gigabit Ethernet applications.

M8/M12 – THE CODINGS

A-coding:	Actuator-sensor plug connections for DeviceNet, IO link and Profibus	
B-coding:	Fieldbus connections for Profibus and Interbus	
D-coding:	Industrial Ethernet, Profinet, Ethernet/IP and EtherCat	
S-coding:	Motor, Frequency-convertors, motor operated switches, PSUs for Power, 620 V, 12 A	
T-coding:	Fieldbus comp, passive distribution boxes, motors, PSUs for Power, 63 V, 12 A	
X-coding:	Cat6A, high-speed 10Gbit rugged industrial Ethernet applications IEC 61076-2-109	

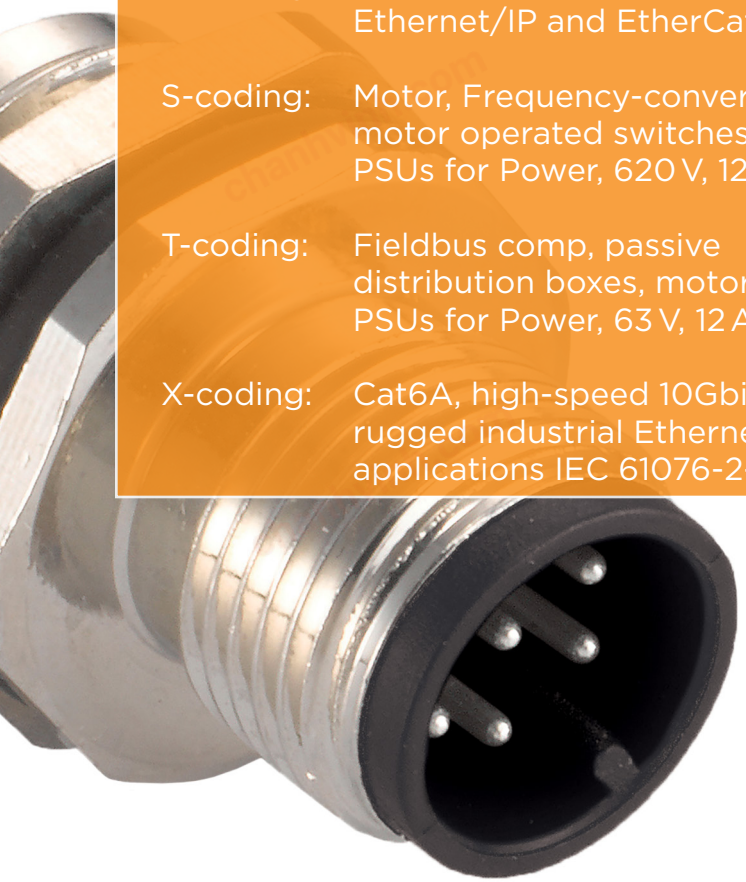

Ambient temperature for M8:
-40 °C to 85 °C
Ambient temperature for M12:
-40 °C to 85 °C
Current rating:
4 and 5 pins: 4 A per pin
8 and 12 pins: 2 A per pin
IP rating: IP67/IP68

As specifications vary for different parts, please refer to your TE contact for detailed information.

Application Specifications for M8 M12 Connectors and Cable Assemblies:
114-32127, 114-137008, 114-137144 and 114-137144-1

Product Specifications:
Connectors: 108-3641, 108-19483, 108-106140
X-coded: 108-137008

Size	Pins	Rated	Maximum Current per pin	Pollution grade
M8	3	60 V	4 A	3
M8	4	30 V	4 A	3
M12	3	250 V	4 A	3
M12	4	250 V	4 A	3
M12	5	60V	4 A	3
M12	8	60 V	2 A	3
M12	12	30 V	2 A	3

TE Part Number Definition

M8M12 Field Installable Connector PNs: T401/T411

T 4 X 1 X X X X XX X – XXX

Sequence Number
000 (default)

Contact Plating
1-Gold
2-Silver

Number Of Contacts
02-2 poles
03-3 poles
04-4 poles
.....

Cable Outlet Types
1-PG7
2-PG9

Body Material Type
0-Plastic/Unshielded
1- Metal/Shielded

Code Type
0-A code
4-B code
5-D code

Interface Type
0- Straight Female
1- Straight Male
2- Right Angle Female
3- Right Angle Male

Application Type
1- Screw contact

Category
0-M8
1-M12

chanhvinh.com

TE Part Number Definition

M8M12 Panel Mount Connector PNs: T403/T404/T413/T414/T407

T 4 X X X X X X XX X — XXX

Sequence Number
000 (default)

Contact Plating
1-Gold

Number Of Contacts
02-2 poles
03-3 poles
04-4 poles
.....

Mount Screw Types
2-PG9 7-M10
4-M8

Body Material Type
1- Unshielded
3-Shielded

Code Type
0-A code
4-B code
5-D code

Panel Mount Types
0-Rear Mount Male Panel
1-Rear Mount Female Panel
2-Front Mount Male Panel
3-Front Mount Female Pane
5-Rear Mount Female Panel RA

Application Type
3- Panel Solder Wire
4-Panel Solder PCB

Category
0-M8
1-M12

chanhvinh.com

TE Part Number Definition

M8M12 Panel Mount Connector with Wire PNs: T407/T417

T 4 X 7 X X X X X XX — XXX

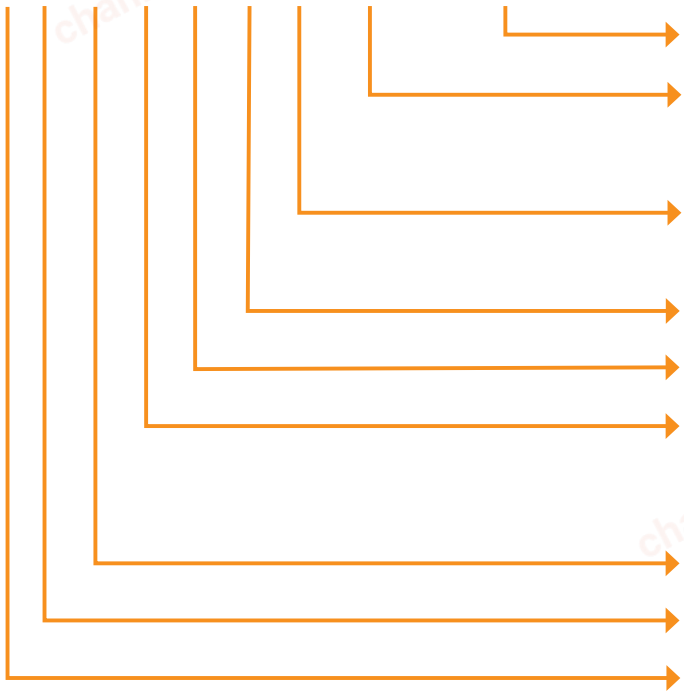

Sequence Number
000 (default)

Number Of Contacts
02-2 poles
03-3 poles
04-4 poles
.....

Code Type
0-A code
4-B code
5-D code

Double end
0-NA

Cable Material Type
1-PVC Wire

Panel Mount Types
0-Rear Mount Male Panel
1-Rear Mount Female Panel
2-Front Mount Male Panel
3-Front Mount Female Panel

Single End
1- Single End

Application Type
7-Panel with Wire

Category
0-M8
1-M12

chanhvinh.com

TE Part Number Definition

M8 Cable Assembly PNs: T405/T406

T 4 0 X X X X X X XX — 00X

Cable Length
001- 0.5M
002- 1.0M
003- 1.5M
004- 3.0M
005- 5.0M
006- 7.0M
007- 10.0M

Contact Poles
03-3 poles
04-4 poles
.....

Code Type
0-A code

Double End
0-NA
1-M8 Straight
2-M8 Right Angle Male
3-M8 Straight Female
4-M8 Right Angle Female
5-M12 Straight Male
6-M12 Right Angle Male
7-M12 Straight Female
8-M12 Right Angle Female

Cable Material Type
0-NA
1-Black PVC
2-Gray PUR

Single end
0-NA
1-M8 Straight Male
2-M8 Right Angle Male
3-M8 Straight Female
4-M8 Right Angle Female

Shape Type
1-Single End
2-Double End

Application Type
5-Cable Assembly Unshielded
6-Cable Assembly Shielded

TE Part Number Definition

M12 Cable Assembly PNs: T415/T416

T 4 1 X X X X X X XX – 00X

Cable Length
001- 0.5M
002- 1.0M
003- 1.5M
004- 3.0M
005- 5.0M
006- 7.0M
007- 10.0M

Contact Poles
02-2 poles
03-3 poles
04-4 poles
.....

Code Type
0-A code
4-B code
5-D code

Double End
0-NA
1-M12 Straight Male
2-M12 Right Angle Male
3-M12 Straight Female
4-M12 Right Angle Female

Cable Material Type
0-NA
1-Black PVC
2-Gray PUR

Single end
0-NA
1-M12 Straight Male
2-M12 Right Angle Male
3-M12 Straight Female
4-M12 Right Angle Female

Shape Type
1-Single End
2-Double End

Application Type
5-Cable Assembly Unshielded
6-Cable Assembly Shielded

chanhvinh.com

M8 Straight Field Installable

Male Series

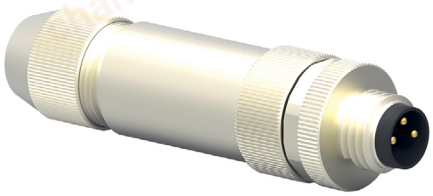

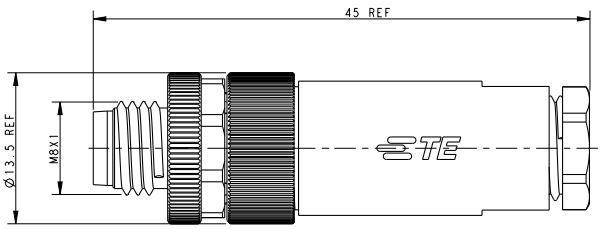

Female Series

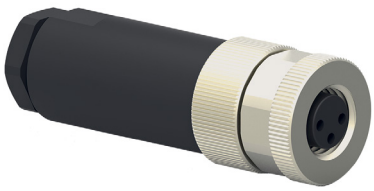

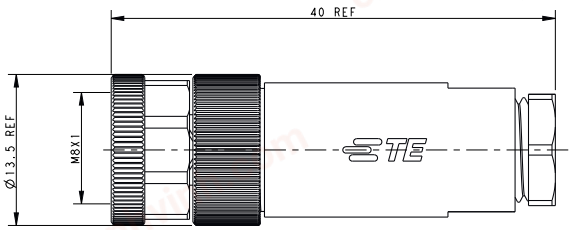

All dimensions in mm. Temperature range: -40 to +85° C. Products can also be obtained with silver-plated contacts upon request.

		TE Part Number
M8 Male Screw Connection, Straight, Unshielded		
3-Pole		T4011008031-000
4-Pole		T4011008041-000

		TE Part Number
M8 Male Screw Connection, Straight, Shielded		
3-Pole		T4011019031-000
4-Pole		T4011019041-000

		TE Part Number
M8 Female Screw Connection, Straight, Unshielded		
3-Pole		T4010008031-000
4-Pole		T4010008041-000

		TE Part Number
M8 Female Screw Connection, Straight, Shielded		
3-Pole		T4010019031-000
4-Pole		T4010019041-000

chanhvinh.com

M8 Angled Field Installable

Male Series



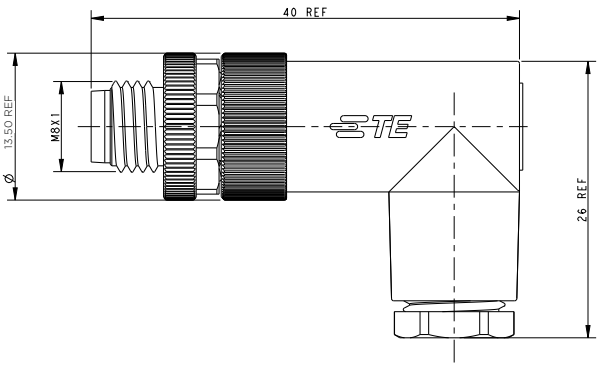

Female Series



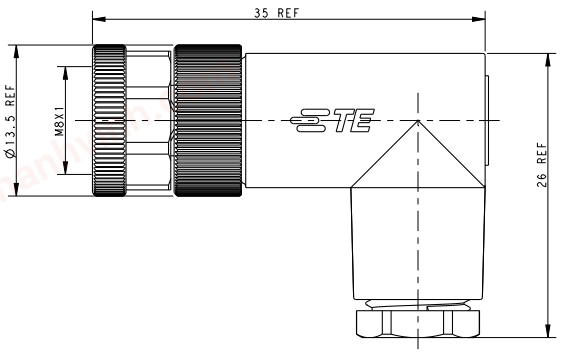

All dimensions in mm. Temperature range: -40 to +85° C. Products can also be obtained with silver-plated contacts upon request.

		TE Part Number
M8 Male Right Angled, Unshielded		
3-Pole		T4013008031-000
4-Pole		T4013008041-000

		TE Part Number
M8 Male Right Angled, Shielded		
3-Pole		T4013019031-000
4-Pole		T4013019041-000

		TE Part Number
M8 Female Right Angled, Unshielded		
3-Pole		T4012008031-000
4-Pole		T4012008041-000

		TE Part Number
M8 Female Right Angled, Shielded		
3-Pole		T4010019031-000
4-Pole		T4010019041-000

chanhvinh.com

M8 Panel Mount R/A PCB

Male Series



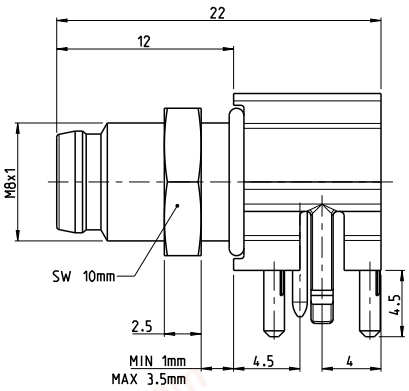

Female Series



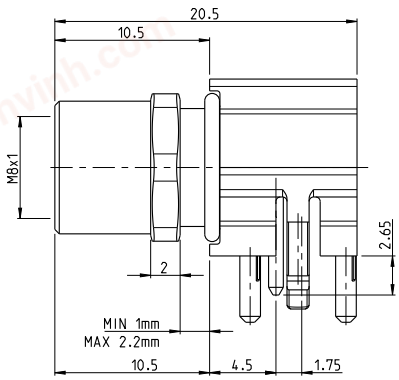

All dimensions in mm. Temperature range: -40 to +85° C.

		TE Part Number
M8, Male, Rear Mount, PCB, R/A, Unshielded		
3-Pole		2-2172067-2
4-Pole		3-2172067-2

		TE Part Number
M8, Male, Rear Mount, PCB, R/A, Shielded		
3-Pole		2-2172093-2
4-Pole		3-2172093-2

		TE Part Number
M8, Female, Rear Mount, PCB, R/A, Unshielded		
3-Pole		2-2172068-2
4-Pole		3-2172068-2

		TE Part Number
M8, Female, Rear Mount, PCB, R/A, Shielded		
3-Pole		2-2172091-2
4-Pole		3-2172091-2

chanhvinh.com

M8 Panel Mount Straight PCB

Male Series



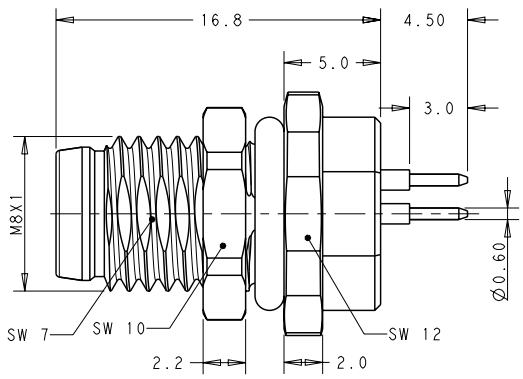

Female Series



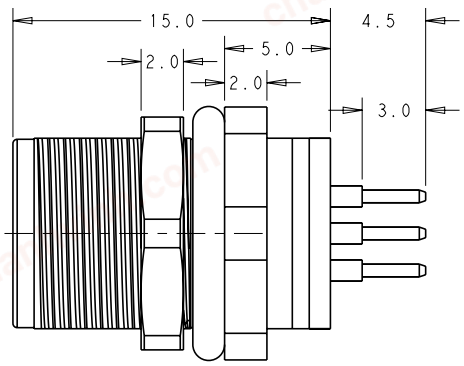

All dimensions in mm. Temperature range: -40 to +85° C. Products can also be obtained with silver-plated contacts upon request.

		TE Part Number
M8, Male, Rear Mount, PCB, Straight, Unshielded		
3-Pole		T4040014031-000
4-Pole		T4040014041-000

		TE Part Number
M8, Male, Front Mount, PCB, Straight, Unshielded		
3-Pole		T4042014031-000
4-Pole		T4042014041-000

		TE Part Number
M8, Male, Rear Mount, PCB, Straight, Shielded		
3-Pole		T4040034031-000
4-Pole		T4040034041-000

		TE Part Number
M8, Female, Rear Mount, PCB, Straight, Unshielded		
3-Pole		T4041017031-000
4-Pole		T4041017041-000

		TE Part Number
M8, Female,Front Mount, PCB, Straight, Unshielded		
3-Pole		T4043014031-000
4-Pole		T4043014041-000

		TE Part Number
M8, Female, Rear Mount, PCB, Straight, Shielded		
3-Pole		T4041037031-000
4-Pole		T4041037041-000

M8/M12 CONNECTOR SYSTEM

M8 Panel Mount Solder Wire

Male Series



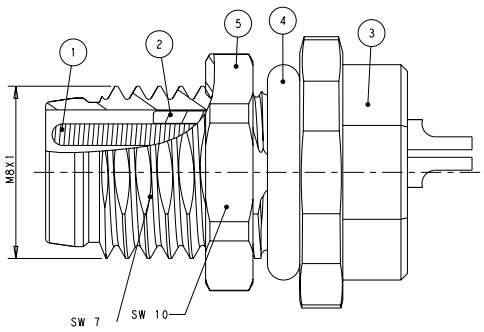

Female Series

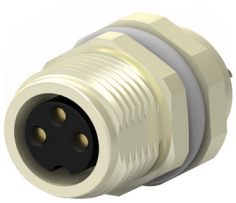

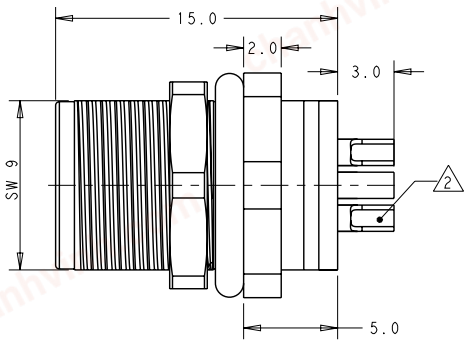

All dimensions in mm. Temperature range: -40 to +85° C.

		TE Part Number
M8, Male, Rear Mount, Solder Wire, Straight		
3-Pole		T4030014031-000
4-Pole		T4030014041-000

		TE Part Number
M8, Male, Front Mount, Solder Wire, Straight		
3-Pole		T4032014031-000
4-Pole		T4032014041-000

		TE Part Number
M8, Female, Rear Mount, Solder Wire, Straight		
3-Pole		T4031017031-000
4-Pole		T4031017041-000

		TE Part Number
M8, Female, Front Mount, Solder Wire, Straight		
3-Pole		T4033014031-000
4-Pole		T4033014041-000

M8/M12 CONNECTOR SYSTEM

M8 Panel Mount 200mm Wire

Male Series



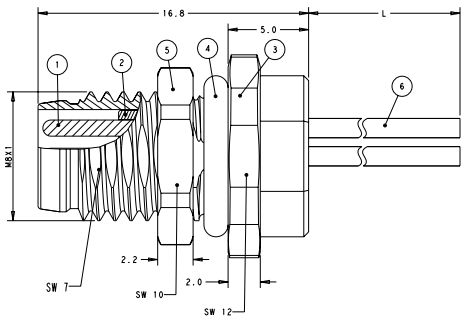

Female Series



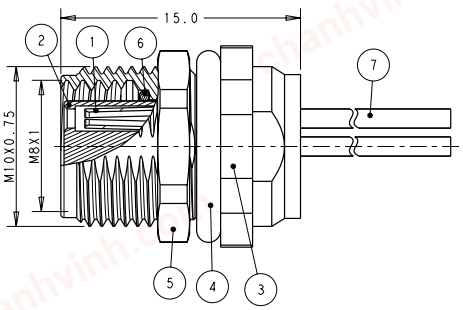

All dimensions in mm. Temperature range: -40 to +85 ° C.

		TE Part Number
M8, Male, Rear Mount, 200mm Wire, Straight		
3-Pole		T4070014031-001
4-Pole		T4070014041-001

		TE Part Number
M8, Male, Front Mount, 200mm Wire, Straight		
3-Pole		T4070014031-001
4-Pole		T4070014041-001

		TE Part Number
M8, Female, Rear Mount, 200mm Wire, Straight		
3-Pole		T4071017031-001
4-Pole		T4071017041-001

		TE Part Number
M8, Female, Front Mount, 200mm Wire, Straight		
3-Pole		T4073014031-001
4-Pole		T4073014041-001

chanhvinh.com

M12 Straight Field Installable A, B, D Coded

Male Series





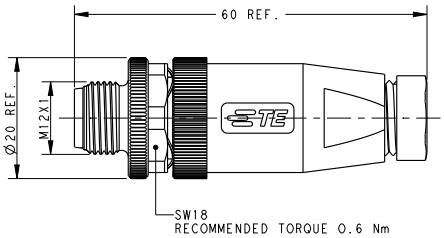

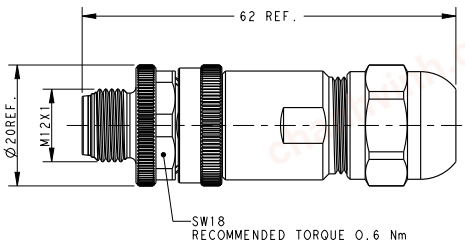

All dimensions in mm. Temperature range: -40 to +85 ° C. Products can also be obtained with silver-plated contacts upon request.

		TE Part Number
A coding – M12 Male Screw Connection, Straight, Unshielded		
2-Pole	PG7	T4111001021-000
	PG9	T4111002021-000
3-Pole	PG7	T4111001031-000
	PG9	T4111002031-000
4-Pole	PG7	T4111001041-000
	PG9	T4111002041-000
5-Pole	PG7	T4111001051-000
	PG9	T4111002051-000
8-Pole	PG9	T4111002081-000
12-Pole	PG9	6-2271110-2

		TE Part Number
A coding – M12 Male Screw Connection, Straight, Shielded		
2-Pole	PG7	T4111011021-000
	PG9	T4111012021-000
3-Pole	PG7	T4111011031-000
	PG9	T4111012031-000
4-Pole	PG7	T4111011041-000
	PG9	T4111012041-000
5-Pole	PG7	T4111011051-000
	PG9	T4111012051-000
8-Pole	PG9	T4111012081-000
12-Pole	PG9	6-2271111-2

B coding – M12 Male Screw Connection, Straight, Unshielded		
2-Pole	PG7	T4111401021-000
	PG9	T4111402021-000
3-Pole	PG7	T4111401031-000
	PG9	T4111402031-000
4-Pole	PG7	T4111401041-000
	PG9	T4111402041-000
5-Pole	PG7	T4111401051-000
	PG9	T4111402051-000

B coding – M12 Male Screw Connection, Straight, Shielded		
2-Pole	PG7	T4111411021-000
	PG9	T4111412021-000
3-Pole	PG7	T4111411031-000
	PG9	T4111412031-000
4-Pole	PG7	T4111411041-000
	PG9	T4111412041-000
5-Pole	PG7	T4111411051-000
	PG9	T4111412051-000

D coding – M12 Male Screw Connection, Straight, Unshielded		
2-Pole	PG7	T4111501021-000
	PG9	T4111502021-000
3-Pole	PG7	T4111501031-000
	PG9	T4111502031-000
4-Pole	PG7	T4111501041-000
	PG9	T4111502041-000
5-Pole	PG7	T4111501051-000
	PG9	T4111502051-000

D coding – M12 Male Screw Connection, Straight, Shielded		
2-Pole	PG7	T4111511021-000
	PG9	T4111512021-000
3-Pole	PG7	T4111511031-000
	PG9	T4111512031-000
4-Pole	PG7	T4111511041-000
	PG9	T4111512041-000
5-Pole	PG7	T4111511051-000
	PG9	T4111512051-000

chanhvinh.com

M12 Straight Field Installable A, B, D Coded

Female Series





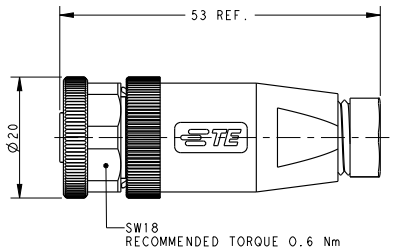

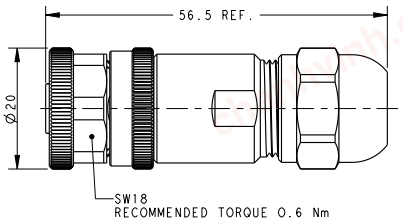

All dimensions in mm. Temperature range: -40 to +85 ° C. Products can also be obtained with silver-plated contacts upon request.

		TE Part Number
A coding – M12 Female Screw Connection, Straight, Unshielded		
2-Pole	PG7	T4110001021-000
	PG9	T4110002021-000
3-Pole	PG7	T4110001031-000
	PG9	T4110002031-000
4-Pole	PG7	T4110001041-000
	PG9	T4110002041-000
5-Pole	PG7	T4110001051-000
	PG9	T4110002051-000
8-Pole	PG9	T4110002081-000
12-Pole	PG9	6-2271116-2

		TE Part Number
A coding – M12 Female Screw Connection, Straight, Shielded		
2-Pole	PG7	T4110011021-000
	PG9	T4110012021-000
3-Pole	PG7	T4110011031-000
	PG9	T4110012031-000
4-Pole	PG7	T4110011041-000
	PG9	T4110012041-000
5-Pole	PG7	T4110011051-000
	PG9	T4110012051-000
8-Pole	PG9	T4110012081-000
12-Pole	PG9	6-2271117-2

B coding – M12 Female Screw Connection, Straight, Unshielded		
2-Pole	PG7	T4110401021-000
	PG9	T4110402021-000
3-Pole	PG7	T4110401031-000
	PG9	T4110402031-000
4-Pole	PG7	T4110401041-000
	PG9	T4110402041-000
5-Pole	PG7	T4110401051-000
	PG9	T4110402051-000

B coding – M12 Female Screw Connection, Straight, Shielded		
2-Pole	PG7	T4110411021-000
	PG9	T4110412021-000
3-Pole	PG7	T4110411031-000
	PG9	T4110412031-000
4-Pole	PG7	T4110411041-000
	PG9	T4110412041-000
5-Pole	PG7	T4110411051-000
	PG9	T4110412051-000

D coding – M12 Female Screw Connection, Straight, Unshielded		
2-Pole	PG7	T4110501021-000
	PG9	T4110502021-000
3-Pole	PG7	T4110501031-000
	PG9	T4110502031-000
4-Pole	PG7	T4110501041-000
	PG9	T4110502041-000
5-Pole	PG7	T4110501051-000
	PG9	T4110502051-000

D coding – M12 Female Screw Connection, Straight, Shielded		
2-Pole	PG7	T4110511021-000
	PG9	T4110512021-000
3-Pole	PG7	T4110511031-000
	PG9	T4110512031-000
4-Pole	PG7	T4110511041-000
	PG9	T4110512041-000
5-Pole	PG7	T4110511051-000
	PG9	T4110512051-000

chanhvinh.com

M12 Angled Field Installable A, B, D Coded

Male Series





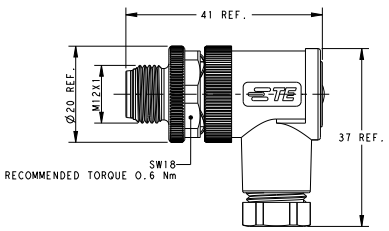

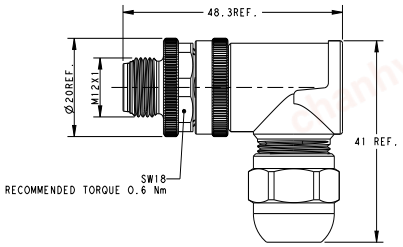

All dimensions in mm. Temperature range: -40 to +85° C. Products can also be obtained with silver-plated contacts upon request.

Temperature range: -25 to +85		TE Part Number
A coding – M12 Male Screw Connection, Angled, Unshielded		
2-Pole	PG7	T4113001021-000
	PG9	T4113002021-000
3-Pole	PG7	T4113001031-000
	PG9	T4113002031-000
4-Pole	PG7	T4113001041-000
	PG9	T4113002041-000
5-Pole	PG7	T4113001051-000
	PG9	T4113002051-000
8-Pole	PG9	T4113002081-000
12-Pole	PG9	6-2271122-2
B coding – M12 Male Screw Connection, Angled, Unshielded		
2-Pole	PG7	T4113401021-000
	PG9	T4113402021-000
3-Pole	PG7	T4113401031-000
	PG9	T4113402031-000
4-Pole	PG7	T4113401041-000
	PG9	T4113402041-000
5-Pole	PG7	T4113401051-000
	PG9	T4113402051-000
D coding – M12 Male Screw Connection, Angled, Unshielded		
2-Pole	PG7	T4113501021-000
	PG9	T4113502021-000
3-Pole	PG7	T4113501031-000
	PG9	T4113502031-000
4-Pole	PG7	T4113501041-000
	PG9	T4113502041-000
5-Pole	PG7	T4113501051-000
	PG9	T4113502051-000

		TE Part Number
A coding – M12 Male Screw Connection, Angled, Shielded		
2-Pole	PG7	T4113011021-000
	PG9	T4113012021-000
3-Pole	PG7	T4113011031-000
	PG9	T4113012031-000
4-Pole	PG7	T4113011041-000
	PG9	T4113012041-000
5-Pole	PG7	T4113011051-000
	PG9	T4113012051-000
8-Pole	PG9	T4113012081-000
12-Pole	PG9	6-2271123-2
B coding – M12 Male Screw Connection, Angled, Shielded		
2-Pole	PG7	T4113411021-000
	PG9	T4113412021-000
3-Pole	PG7	T4113411031-000
	PG9	T4113412031-000
4-Pole	PG7	T4113411041-000
	PG9	T4113412041-000
5-Pole	PG7	T4113411051-000
	PG9	T4113412051-000
D coding – M12 Male Screw Connection, Angled, Shielded		
2-Pole	PG7	T4113511021-000
	PG9	T4113512021-000
3-Pole	PG7	T4113511031-000
	PG9	T4113512031-000
4-Pole	PG7	T4113511041-000
	PG9	T4113512041-000
5-Pole	PG7	T4113511051-000
	PG9	T4113512051-000

chanhvinh.com

M12 Angled Field Installable A, B, D Coded

Female Series

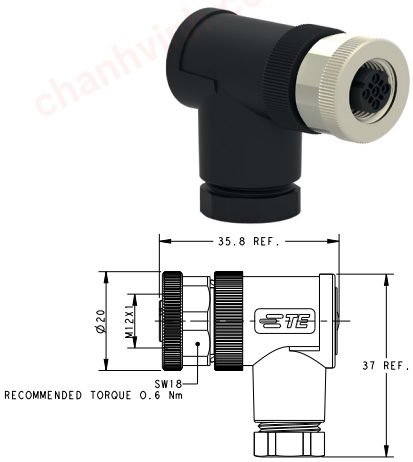

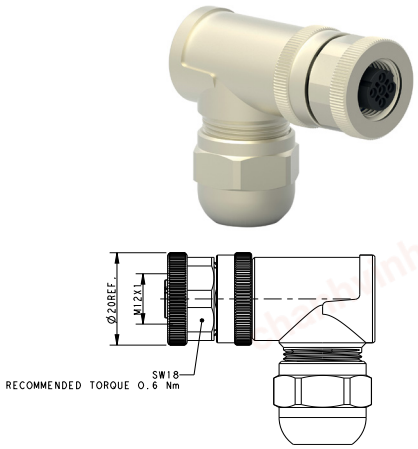

All dimensions in mm. Temperature range: -40 to +85° C. Products can also be obtained with silver-plated contacts upon request.

		TE Part Number
A coding – M12 Female Screw Connection, Angled, Unshielded		
2-Pole	PG7	T4112001021-000
	PG9	T4112002021-000
3-Pole	PG7	T4112001031-000
	PG9	T4112002031-000
4-Pole	PG7	T4112001041-000
	PG9	T4112002041-000
5-Pole	PG7	T4112001051-000
	PG9	T4112002051-000
8-Pole	PG9	T4112002081-000
12-Pole	PG9	6-2271128-2

		TE Part Number
A coding – M12 Female Screw Connection, Angled, Shielded		
2-Pole	PG7	T4112011021-000
	PG9	T4112012021-000
3-Pole	PG7	T4112011031-000
	PG9	T4112012031-000
4-Pole	PG7	T4112011041-000
	PG9	T4112012041-000
5-Pole	PG7	T4112011051-000
	PG9	T4112012051-000
8-Pole	PG9	T4112012081-000
12-Pole	PG9	6-2271129-2

B coding – M12 Female Screw Connection, Angled, Unshielded		
2-Pole	PG7	T4112401021-000
	PG9	T4112402021-000
3-Pole	PG7	T4112401031-000
	PG9	T4112402031-000
4-Pole	PG7	T4112401041-000
	PG9	T4112402041-000
5-Pole	PG7	T4112401051-000
	PG9	T4112402051-000

B coding – M12 Female Screw Connection, Angled, Shielded		
2-Pole	PG7	T4112411021-000
	PG9	T4112412021-000
3-Pole	PG7	T4112411031-000
	PG9	T4112412031-000
4-Pole	PG7	T4112411041-000
	PG9	T4112412041-000
5-Pole	PG7	T4112411051-000
	PG9	T4112412051-000

D coding – M12 Female Screw Connection, Angled, Unshielded		
2-Pole	PG7	T4112501021-000
	PG9	T4112502021-000
3-Pole	PG7	T4112501031-000
	PG9	T4112502031-000
4-Pole	PG7	T4112501041-000
	PG9	T4112502041-000
5-Pole	PG7	T4112501051-000
	PG9	T4112502051-000

D coding – M12 Female Screw Connection, Angled, Shielded		
2-Pole	PG7	T4112511021-000
	PG9	T4112512021-000
3-Pole	PG7	T4112511031-000
	PG9	T4112512031-000
4-Pole	PG7	T4112511041-000
	PG9	T4112512041-000
5-Pole	PG7	T4112511051-000
	PG9	T4112512051-000

chanhvinh.com

M12 Panel Mount R/A PCB

Male Series

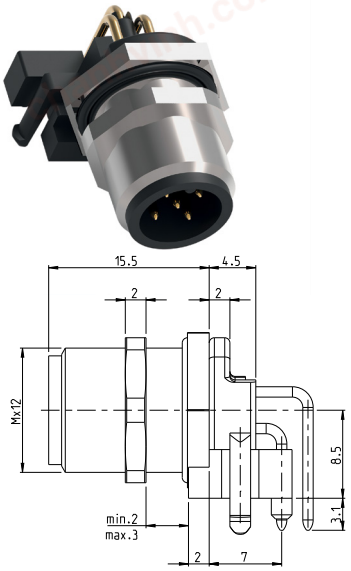

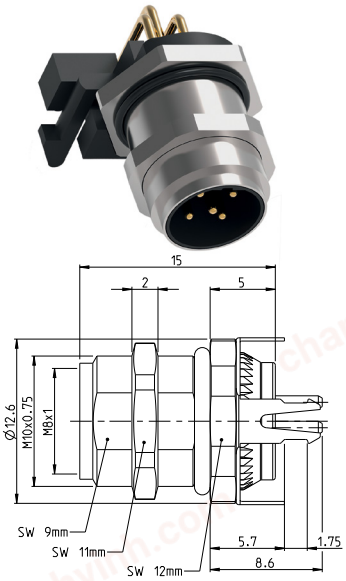

All dimension in mm. Temperatur range: -40 to +85° C.

		TE Part Number
A coding – M12, Male, Rear Mount, PCB, R/A, Unshielded		
4-Pole		T41440015041-000
5-Pole		T41440015051-000
A coding – M12, Male, Rear Mount, PCB, R/A, Shielded		
4-Pole (45 degrees)		3-2172094-2
4-Pole		T4144035041-000
5-Pole		T4144035051-000
8-Pole		T4144035081-000

		TE Part Number
B coding – M12, Male, Rear Mount, PCB, R/A, Unshielded		
5-Pole		T4144415051-000
B coding – M12, Male, Rear Mount, PCB, R/A, Shielded		
5-Pole		T4144435051-000
D coding – M12, Male, Rear Mount, PCB, R/A, Unshielded		
4-Pole		T4144515041-000
D coding – M12, Male, Rear Mount, PCB, R/A, Shielded		
4-Pole		T4144535041-000

chanhvinh.com

M12 Panel Mount R/A PCB

Female Series

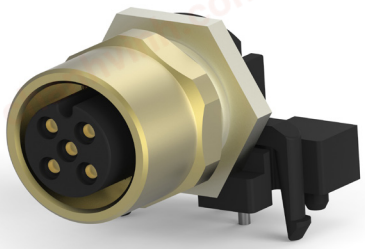

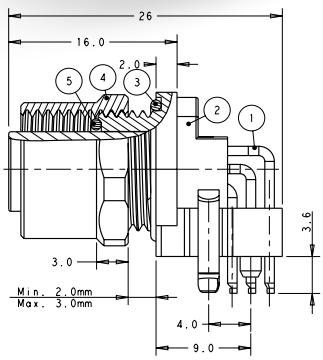

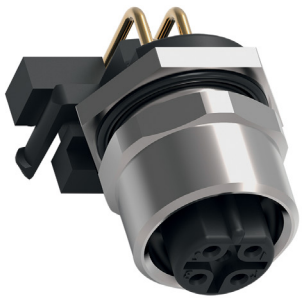

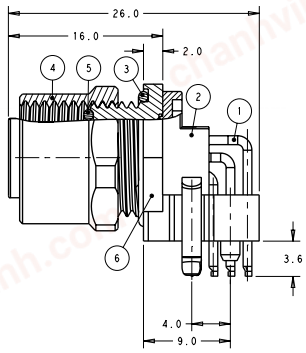

All dimensions in mm. Temperature range: -40 to +85° C.

		TE Part Number
A coding - M12, Female, Rear Mount, PCB, R/A, Unshielded		
2-Pole		T4145015021-001
3-Pole		T4145015031-001
4-Pole		T4145015041-001
5-Pole		T4145015051-001

		TE Part Number
A coding - M12, Female, Rear Mount, PCB, R/A, Shielded		
2-Pole		T4145035021-001
3-Pole		T4145035031-001
4-Pole		T4145035041-001
4-Pole (45 degrees)		3-2172095-2
5-Pole		T4145035051-001
8-Pole		5-2172079-2

		TE Part Number
B coding - M12, Female, Rear Mount, PCB, R/A, Unshielded		
2-Pole		T4145415021-001
3-Pole		T4145415031-001
4-Pole		T4145415041-001
5-Pole		T4145415051-001

		TE Part Number
B coding - M12, Female, Rear Mount, PCB, R/A, Shielded		
2-Pole		T4145435021-001
3-Pole		T4145435031-001
4-Pole		T4145435041-001
5-Pole		T4145435051-001

		TE Part Number
D coding - M12, Female, Rear Mount, PCB, R/A, Unshielded		
2-Pole		T4145515021-001
3-Pole		T4145515031-001
4-Pole		T4145515041-001
5-Pole		T4145515051-001

		TE Part Number
D coding - M12, Female, Rear Mount, PCB, R/A, Shielded		
2-Pole		T4145535021-001
3-Pole		T4145535031-001
4-Pole		T4145535041-001
5-Pole		T4145535051-001

chanhvinh.com

M12 Panel Mount Straight PCB – Rear Mounting

Male Series

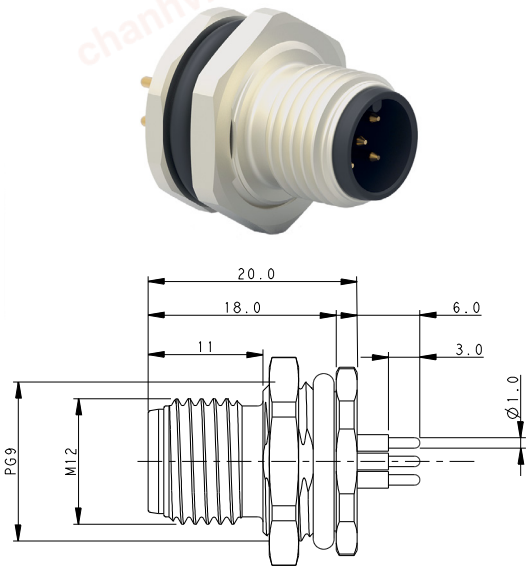

Female Series

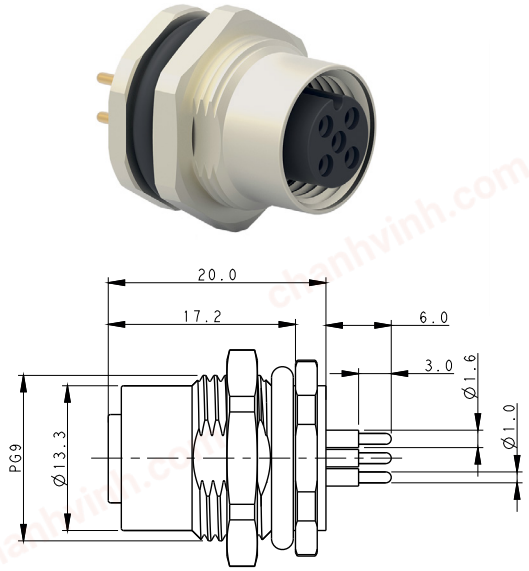

All dimensions in mm. Temperature range: -40 to +85° C.

		TE Part Number
A coding – M12 Male, Rear Mounting, Straight		
2-Pole		T4140012021-000
3-Pole		T4140012031-000
4-Pole		T4140012041-000
5-Pole		T4140012051-000

		TE Part Number
A coding – M12 Female, Rear Mounting, Straight		
2-Pole		T4141012021-000
3-Pole		T4141012031-000
4-Pole		T4141012041-000
5-Pole		T4141012051-000

B coding – M12 Male, Rear Mounting, Straight		
2-Pole		T4140412021-000
3-Pole		T4140412031-000
4-Pole		T4140412041-000
5-Pole		T4140412051-000

B coding – M12 Female, Rear Mounting, Straight		
2-Pole		T4141412021-000
3-Pole		T4141412031-000
4-Pole		T4141412041-000
5-Pole		T4141412051-000

D coding – M12 Male, Rear Mounting, Straight		
2-Pole		T4140512021-000
3-Pole		T4140512031-000
4-Pole		T4140512041-000
5-Pole		T4140512051-000

D coding – M12 Female, Rear Mounting, Straight		
2-Pole		T4141512021-000
3-Pole		T4141512031-000
4-Pole		T4141512041-000
5-Pole		T4141512051-000

A-coding - M12 Male, Rear Mounting, Solder PCB	
8-Pole	T4140012081-000
12-Pole	T4140012121-000

A-coding - M12 Female, Rear Mounting, Solder PCB	
8-Pole	T4141012081-000
12-Pole	T4141012121-000

chanhvinh.com

M12 Panel Mount Straight PCB – Front Mounting

Male Series

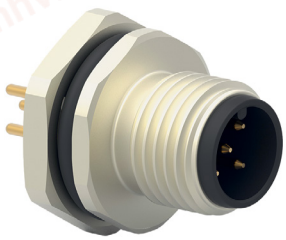

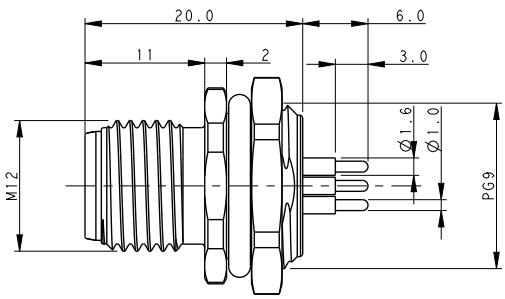

Female Series

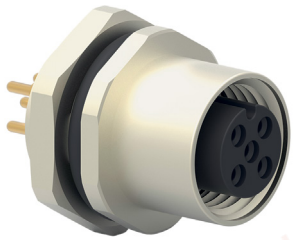

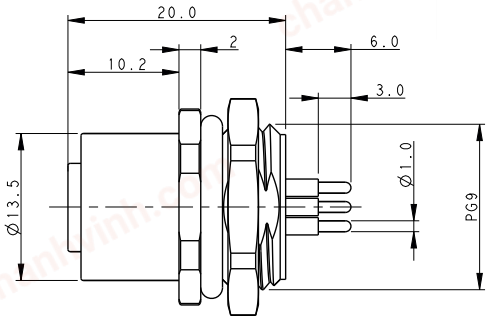

All dimensions in mm. Temperature range: -40 to +85° C.

		TE Part Number
A coding – M12 Male, Front Mounting, Straight		
2-Pole		T4142012021-000
3-Pole		T4142012031-000
4-Pole		T4142012041-000
5-Pole		T4142012051-000
B coding – M12 Male, Front Mounting, Straight		
2-Pole		T4142412021-000
3-Pole		T4142412031-000
4-Pole		T4142412041-000
5-Pole		T4142412051-000
D coding – M12 Male, Front Mounting, Straight		
2-Pole		T4142512021-000
3-Pole		T4142512031-000
4-Pole		T4142512041-000
5-Pole		T4142512051-000
A-coding - M12 Male, Front Mounting, Solder PCB		
8-Pole		T4142012081-000
12-Pole		T4142012121-000

		TE Part Number
A coding – M12 Female, Front Mounting, Straight		
2-Pole		T4143012021-000
3-Pole		T4143012031-000
4-Pole		T4143012041-000
5-Pole		T4143012051-000
B coding – M12 Female, Front Mounting, Straight		
2-Pole		T4143412021-000
3-Pole		T4143412031-000
4-Pole		T4143412041-000
5-Pole		T4143412051-000
D coding – M12 Female, Front Mounting, Straight		
2-Pole		T4143512021-000
3-Pole		T4143512031-000
4-Pole		T4143512041-000
5-Pole		T4143512051-000
A-coding - M12 Female, Front Mounting, Solder PCB		
8-Pole		T4143012081-000
12-Pole		T4143012121-000

chanhvinh.com

M12 Panel Mount Solder Wire – Rear Mounting

Male Series

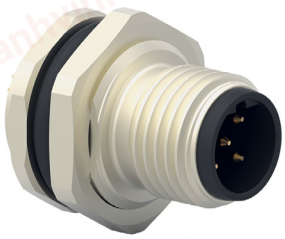

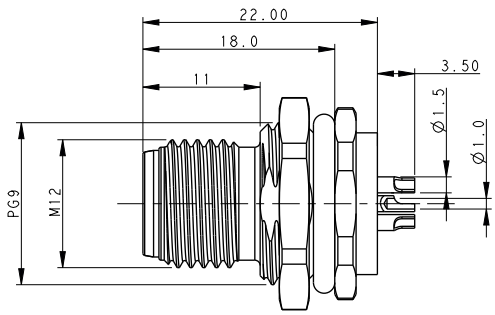

Female Series

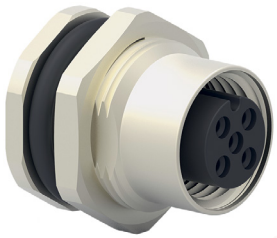

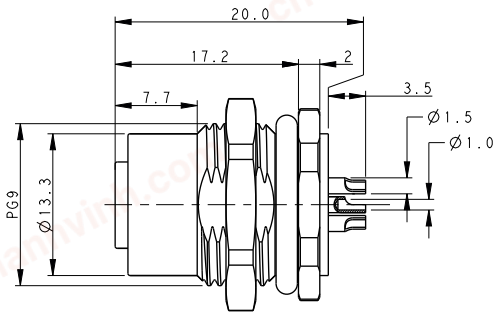

All dimensions in mm. Temperature range: -40 to +85° C.

		TE Part Number
A coding – M12 Male, Rear Mounting, Straight		
2-Pole		T4130012021-000
3-Pole		T4130012031-000
4-Pole		T4130012041-000
5-Pole		T4130012051-000
B coding – M12 Male, Rear Mounting, Straight		
2-Pole		T4130412021-000
3-Pole		T4130412031-000
4-Pole		T4130412041-000
5-Pole		T4130412051-000
D coding – M12 Male, Rear Mounting, Straight		
2-Pole		T4130512021-000
3-Pole		T4130512031-000
4-Pole		T4130512041-000
5-Pole		T4130512051-000
A-coding - M12 Male, Rear Mounting, Solder Wire		
8-Pole		T4130012081-000
12-Pole		T4130012121-000

		TE Part Number
A coding – M12 Female, Rear Mounting, Straight		
2-Pole		T4131012021-000
3-Pole		T4131012031-000
4-Pole		T4131012041-000
5-Pole		T4131012051-000
B coding – M12 Female, Rear Mounting, Straight		
2-Pole		T4131412021-000
3-Pole		T4131412031-000
4-Pole		T4131412041-000
5-Pole		T4131412051-000
D coding – M12 Female, Rear Mounting, Straight		
2-Pole		T4131512021-000
3-Pole		T4131512031-000
4-Pole		T4131512041-000
5-Pole		T4131512051-000
A-coding - M12 Female, Rear Mounting, Solder Wire		
8-Pole		T4131012081-000
12-Pole		T4131012121-000

chanhvinh.com

M12 Panel Mount Solder Wire – Front Mounting

Male Series



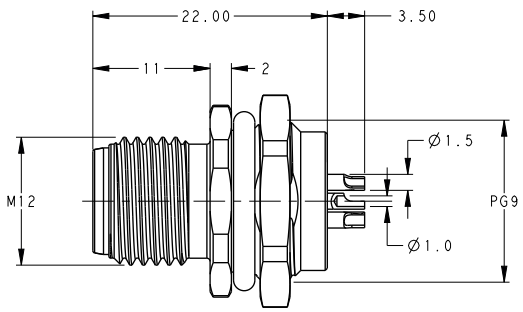

Female Series

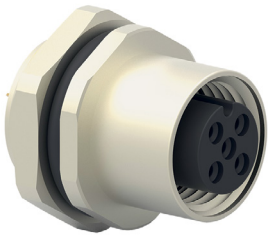

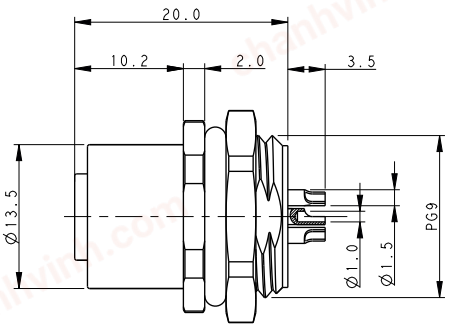

All dimensions in mm. Temperature range: -40 to +85° C.

		TE Part Number
A coding – M12 Male, Front Mounting, Straight		
2-Pole		T4132012021-000
3-Pole		T4132012031-000
4-Pole		T4132012041-000
5-Pole		T4132012051-000
B coding – M12 Male, Front Mounting, Straight		
2-Pole		T4132412021-000
3-Pole		T4132412031-000
4-Pole		T4132412041-000
5-Pole		T4132412051-000
D coding – M12 Male, Front Mounting, Straight		
2-Pole		T4132512021-000
3-Pole		T4132512031-000
4-Pole		T4132512041-000
5-Pole		T4132512051-000
A-coding - M12 Male, Front Mounting, Solder Wire		
8-Pole		T4132012081-000
12-Pole		T4132012121-000

		TE Part Number
A coding – M12 Female, Front Mounting, Straight		
2-Pole		T4133012021-000
3-Pole		T4133012031-000
4-Pole		T4133012041-000
5-Pole		T4133012051-000
B coding – M12 Female, Front Mounting, Straight		
2-Pole		T4133412021-000
3-Pole		T4133412031-000
4-Pole		T4133412041-000
5-Pole		T4133412051-000
D coding – M12 Female, Front Mounting, Straight		
2-Pole		T4133512021-000
3-Pole		T4133512031-000
4-Pole		T4133512041-000
5-Pole		T4133512051-000
A-coding - M12 Female, Front Mounting, Solder Wire		
8-Pole		T4133012081-000
12-Pole		T4133012121-000

M8/M12 CONNECTOR SYSTEM

M12 Panel Mount 200mm Wire – Front Mounting

Male Series

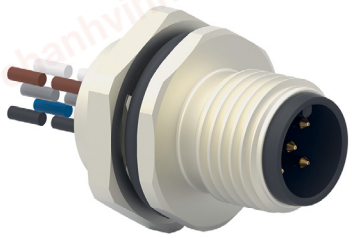

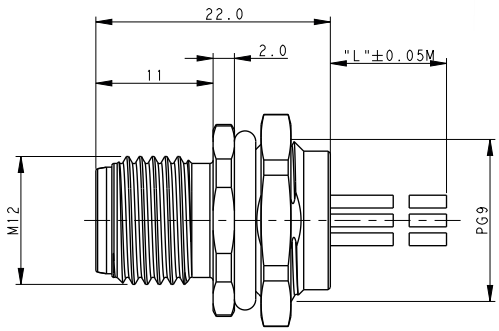

Female Series

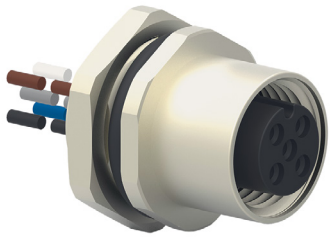

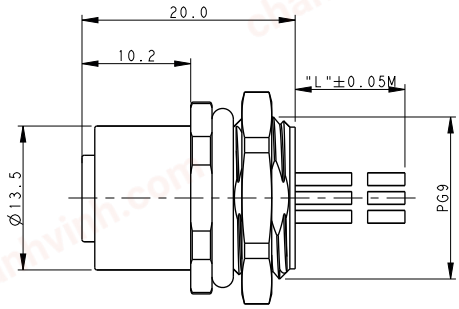

All dimensions in mm. Temperature range: -40 to +85° C.

A coding – M12 Male, Front Mounting, 200mm wire		
2-Pole		T4171210002-001
3-Pole		T4171210003-001
4-Pole		T4171210004-001
5-Pole		T4171210005-001

A coding – M12 Female, Front Mounting, 200mm wire		
2-Pole		T4171310002-001
3-Pole		T4171310003-001
4-Pole		T4171310004-001
5-Pole		T4171310005-001

B coding – M12 Male, Front Mounting, 200mm wire		
2-Pole		T4171210402-001
3-Pole		T4171210403-001
4-Pole		T4171210404-001
5-Pole		T4171210405-001

B coding – M12 Female, Front Mounting, 200mm wire		
2-Pole		T4171310402-001
3-Pole		T4171310403-001
4-Pole		T4171310404-001
5-Pole		T4171310405-001

D coding – M12 Male, Front Mounting, 200mm wire		
2-Pole		T4171210502-001
3-Pole		T4171210503-001
4-Pole		T4171210504-001
5-Pole		T4171210505-001

D coding – M12 Female, Front Mounting, 200mm wire		
2-Pole		T4171310502-001
3-Pole		T4171310503-001
4-Pole		T4171310504-001
5-Pole		T4171310505-001

A-coding - M12 Male, Front Mounting, 200mm wire		
8-Pole		T4171220008-001
12-Pole		T4171230012-001

A-coding - M12 Female, Front Mounting, 200mm wire		
8-Pole		T4171320008-001
12-Pole		T4171330012-001

chanhvinh.com

M12 Panel Mount 200mm Wire – Rear Mounting

Male Series

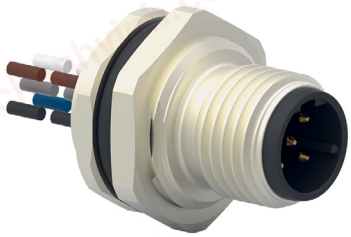

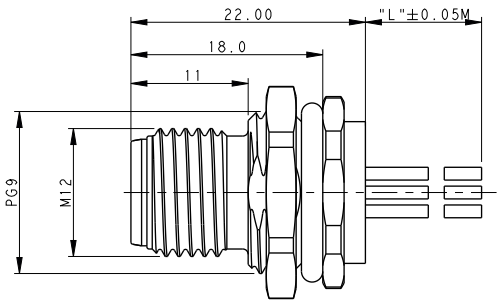

Female Series

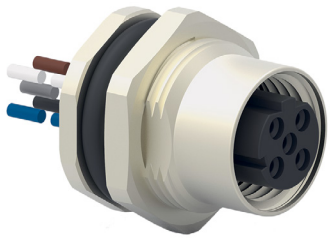

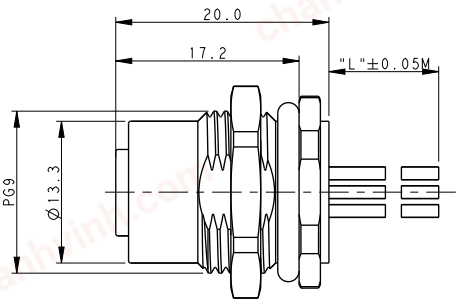

All dimensions in mm. Temperature range: -40 to +85° C.

		TE Part Number
A coding – M12 Male, Rear Mounting, 200mm wire		
2-Pole		T4171010002-001
3-Pole		T4171010003-001
4-Pole		T4171010004-001
5-Pole		T4171010005-001
B coding – M12 Male, Rear Mounting, 200mm wire		
2-Pole		T4171010402-001
3-Pole		T4171010403-001
4-Pole		T4171010404-001
5-Pole		T4171010405-001
D coding – M12 Male, Rear Mounting, 200mm wire		
2-Pole		T4171010502-001
3-Pole		T4171010503-001
4-Pole		T4171010504-001
5-Pole		T4171010505-001
A-coding - M12 Male, Rear Mounting, 200mm wire		
8-Pole		T4171020008-001
12-Pole		T4171030012-001

		TE Part Number
A coding – M12 Female, Rear Mounting, 200mm wire		
2-Pole		T4171110002-001
3-Pole		T4171110003-001
4-Pole		T4171110004-001
5-Pole		T4171110005-001
B coding – M12 Female, Rear Mounting, 200mm wire		
2-Pole		T4171110402-001
3-Pole		T4171110403-001
4-Pole		T4171110404-001
5-Pole		T4171110405-001
D coding – M12 Female, Rear Mounting, 200mm wire		
2-Pole		T4171110502-001
3-Pole		T4171110503-001
4-Pole		T4171110504-001
5-Pole		T4171110505-001
A-coding - M12 Female, Rear Mounting, 200mm wire		
8-Pole		T4171120008-001
12-Pole		T4171130012-001

M8/M12 CONNECTOR SYSTEM

M12 Power Solutions

M12 L-coding Straight solder pcb





Male	2	Rear	T4140L12031-000
Male	3	Rear	T4140L12041-000
Male	4	Rear	T4140L12051-000

Female	2	Rear	T4141L12031-000
Female	3	Rear	T4141L12041-000
Female	4	Rear	T4141L12051-000

M12 S, T coded

Male Series

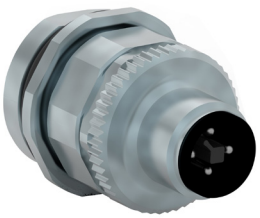

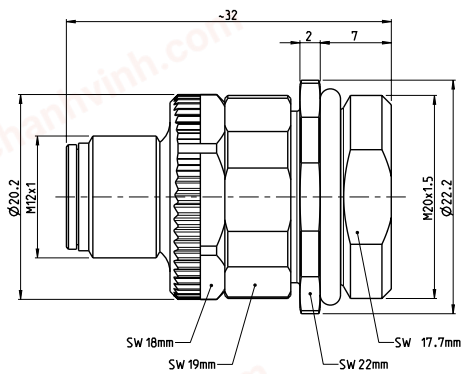

Female Series



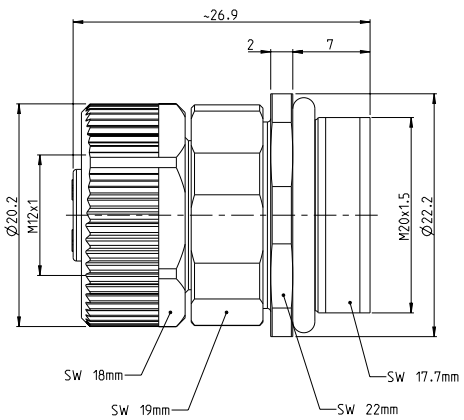

All dimensions in mm. Temperature range: -40 to +85° C.

		TE Part Number
S coding - M12 Male Screw Connection, Straight, Shielded		
3-Pole	plus PE	2120951-1
T coding - M12 Male Screw Connection, Straight, Shielded		
4-Pole		3-2172096-2
T coding - M12 Male, Front Mounting M20 x 1.5		
4-Pole		2120947-1

		TE Part Number
S coding - M12 Female Screw Connection, Straight, Shielded		
3-Pole	plus PE	2120950-1
T coding – M12 Female Screw Connection, Straight, Shielded		
4-Pole		3-2172097-2
T coding – M12 Female, Front Mounting M20 x 1.5		
4-Pole		2120946-1

chanhvinh.com

M12 X-Coded

M12 X-Coded PCB Connector

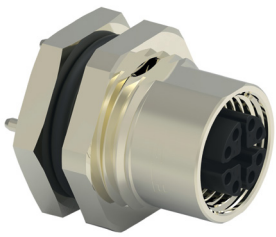

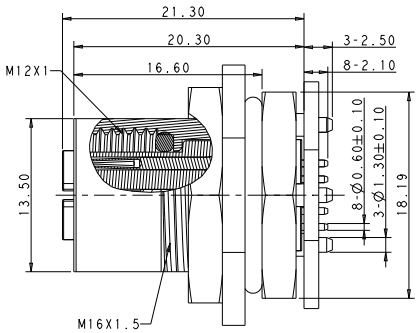

M12 Pin Connector Cable Assembly



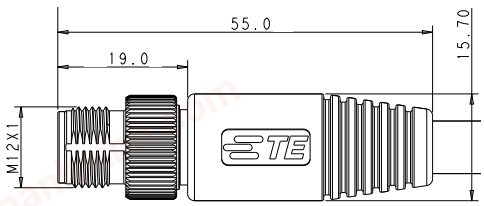

All dimensions in mm. Temperature range: -40 to +85° C.

Description	TE Part Number
M12 X-Coded PCB Connector	
Female Panel Mount Solder PCB Connector	2232331-1
Female Panel Mount Solder Wire	2271195-1
M12 X-Coded Field Installable Connector	
Male Connector installable (IDC): 5.5 - 9 mm cable diameter	2327989-1

Length	TE Part Number
M12 Pin Connector Cable Assembly	
1 m	2241021-1
2 m	2241021-2
3 m	2241021-3
4 m	2241021-4
5 m	2241021-5
10 m	2241021-6

chanhvinh.com

Accessories

Dust Caps



2823563-1



2823064-1



2823065-1

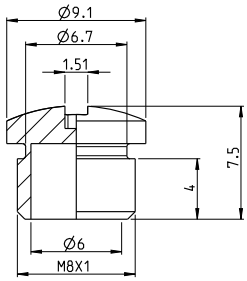

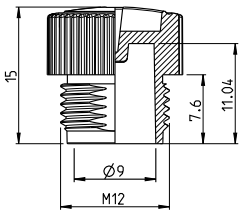

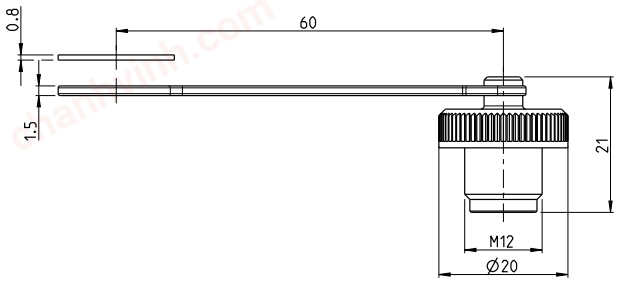

All dimensions in mm. Temperature range: -40 to +85° C.

	TE Part Number
Dust Caps	
M8, Dust Cap, Female, IP67, without sleeve	2823563-1
M12, Dust Cap, Female, IP67, without sleeve	2823064-1
M12, Dust Cap, Female, IP67, with sleeve	2823065-1

chanhvinh.com

Nuts for Panel Mount connectors

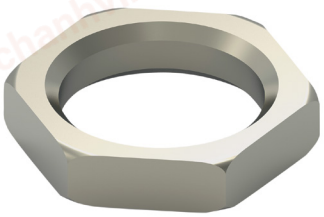

2823423-1

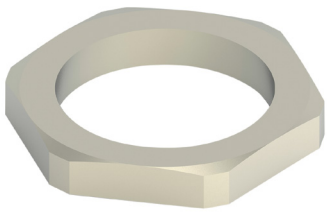

2823066-1

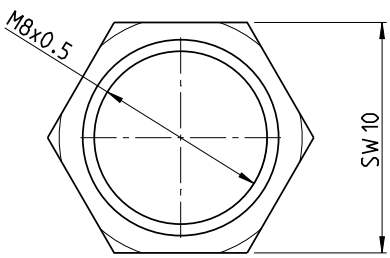

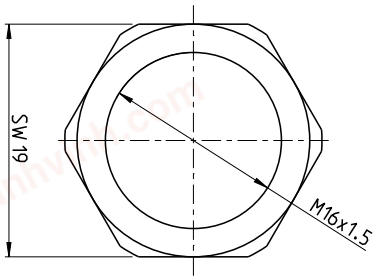

All dimensions in mm.

	TE Part Number
Nuts for Panel Mount connectors	
Nut for M8 Panel Mount connector	2823423-1
Nut for M12 Panel Mount connector	2823066-1

chanhvinh.com

Explore more from te.com:

M8/M12 Connectors

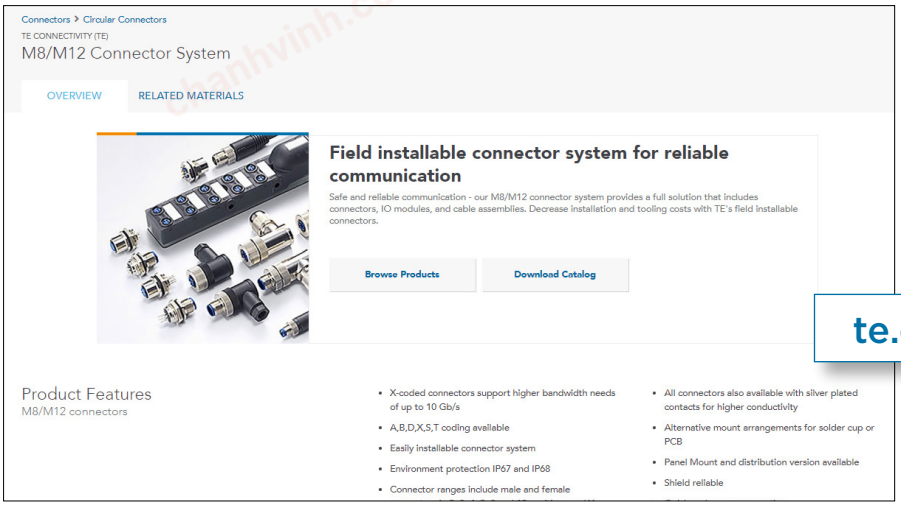

te.com/m8m12

M8M12 Cable Assemblies

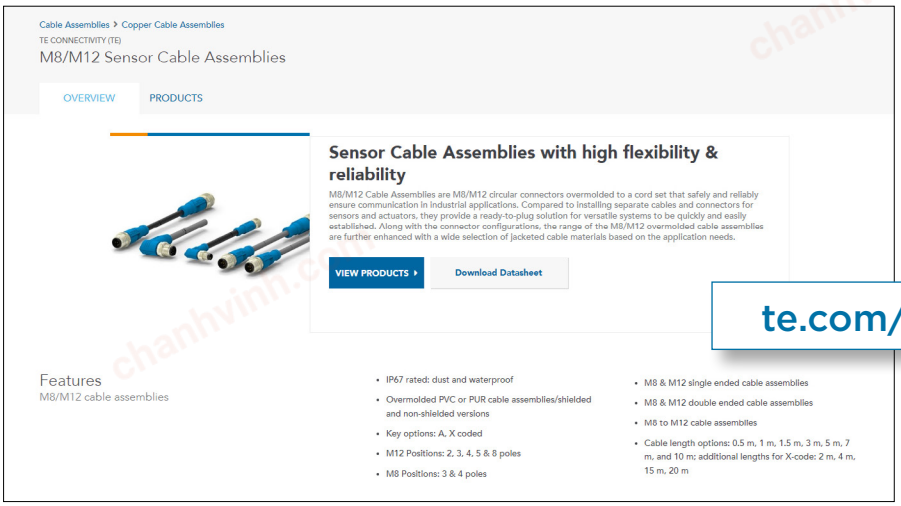

te.com/m8m12cableassemblies

FIND THE PART NUMBERS AND INFORMATION YOU ARE LOOKING FOR

Additional Information

Read more about the connector and cable assembly portfolio on the M8/M12 website - in many different languages.

Download the product flyer

Find all information you need at one glance in the M8/M12 connector system product flyer.

View the video

See our M8/M12 connector system video and learn about the product features, benefits and applications.

Find the products

If you are looking for a specific product or part number, the M8/M12 website is the place to look. Find the images, drawings, technical specifications and much more.

chanhvinh.com

SENSOR/ACTUATOR M8/M12 A-CODE

M8/M12 A-coded cable assemblies are designed for applications such as sensors, robotics & production machinery & equipment, where extreme temperatures and harsh environments are likely to be encountered. These cable assemblies are also ideal for non-industrial applications where compact, robust and reliable connections are required to withstand rigorous environmental elements.

TE provides a full solution with shielded and non-shielded cable assembly options that help customers easily connect to advanced industrial networks. The new product line meets the IP67 rating for protection against dust and water ingress; they also provide protection against electromagnetic radiation, chemicals and mechanical stress commonly found in industrial environments.

Designed as industry standard solutions, these quick-turn cable assemblies help to reduce unnecessary downtime and help maintain continuous operations in critical conditions.



TE's cross-industry expertise allows it to offer customized solutions through a broad cable assembly portfolio that includes connectivity to many industry standards serving various customer needs.

TE's M8/M12 cable assemblies are available as single-ended or double-ended, in straight and angled versions, with shielded and un-shielded variants. Various cable types are offered depending on the application requirements. Cable sheathing is in PVC or PUR. The predefined offering in length of 0.5, 1, 1.5, 3, 5, 7 and 10 meters covers a vast range of customer needs on the market. Customized cable assemblies in different lengths provide a solution for specific needs. All can be used in combination with TE's male/female connectors and I/O Modules.

KEY FEATURES

- IP67 rated: dust and waterproof
- Overmolded PVC or PUR cable assemblies/Shielded & non shielded versions
- Key options: A coded
- M12 Positions: 2, 3, 4, 5 & 8 poles
- M8 Positions: 3 & 4 poles
- M8 & M12 single ended cable assemblies
- M8 & M12 double ended cable assemblies
- M8 to M12 cable assemblies
- Cable length options: 0.5 m, 1 m, 1.5 m, 3 m, 5 m, 7 m, and 10 m

BENEFITS

- M12 Cable Assemblies are IP67 sealed and tested in TE's factory to eliminate the possibility of false wiring & to ensure robust connection
- Reduce downtime in harsh environments with reliable industry standard solution that includes quick turn, prototype cable assemblies.
- Full solution offering including customized and general market cable assemblies enables 1-stopshopping and reduced TCO

chanhvinh.com

M8/M12 CONNECTOR SYSTEM

APPLICATIONS

- Industrial Communications
- Industrial Machinery
- Industrial automation
- Robotics
- Machine tools
- Semiconductor manufacturing
- Manufacturing of solenoid and sensor valves
- Process control systems
- Vision systems
- Electronics manufacturing

MECHANICAL

- Durability: 100 cycles
- Degree of protection: IP67
- Temperature Ratings:
  - PVC:
    - Fixed: -40°C to +80°C
    - Flexible: -25°C to +80°C
  - PUR:
    - Fixed: -10°C to +80°C
    - Flexible: -5°C to +80°C

ELECTRICAL

- Voltage rating
  - M12:
    - 250V (≤4 way)
    - 60V (5 way)
    - 30V (>5 way)
  - M8:
    - 60V (3 way)
    - 30V (4 & 5 pos)
- Current rating
  - M12 A Coding
    - 2 – 5 ways = 4A
    - 6 – 8 ways = 2 A
  - M8: 3A
- Insulation Resistance: 100MΩ Min.

MATERIALS

- Contact: Brass, Gold Flash Plating
- Nut: Brass, Nickel plating
- O-ring: Silicon rubber
- Spring: Stainless steel
- Over-molding: TPU
- Housing: PA
- M12 Cable: 22 AWG, 2/3/4/5 core, with or without Foil, Drain, Braid Shield RoHS; Cable Jacket material: PVC or PUR
- M12 Cable: 24 AWG, 8 core, with or without Foil, Drain, Braid Shield RoHS; Cable Jacket material: PVC or PUR
- M8 Cable: 24 AWG,3/4 core, with or without Foil, Drain, Braid Shield RoHS; Cable Jacket material: PVC or PUR

STANDARDS & APPLICATIONS

- Product Specification: 108-106140
- Application Specification: 114-137144 (M12)
  114-137144-1(M8)
- UL Standard: UL2238
- IEC 61076-2-101: Detail specification for M12 connectors with screw-locking
- IEC 61076-2-104: Detail specification with M8 screw-locking or snap-locking
- IEC 60512: Electromechanical components for electronic equipment; basic testing procedure and measuring methods
- IEC-60529: Degree of protection provided by enclosures (IP Code)

M8/M12 CONNECTOR SYSTEM

M8 Single Ended Cable Assembly

M8 cable assemblies T405/T406 series

STANDARD: IEC61076-2-104

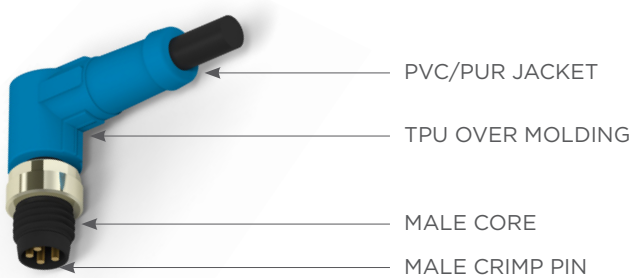

T40	S	A	X	W	Y	0	MN	-00L

S	Application Type - Shield/ Unshielded
5	Unshielded
6	Shield

A	Single/Double
1	Single end
2	Double end

X	Connector Type for Single End
1	M8 Straight, Male
2	M8 Right angle, Male
3	M8 Straight, Female
4	M8 Right angle, Female

W	Cable Material Type
1	Black PVC
2	Gray PUR

MN	Position
03	3P
04	4P

Y	Connector Type for Double End
0	N/A
1	M8 Straight, Male
2	M8 Right angle, Male
3	M8 Straight, Female
4	M8 Right angle, Female
5	M12 Straight, Male
6	M12 Right angle, Male
7	M12 Straight, Female
8	M12 Right angle, Female

-00L	Cable Length
-001	0.5M
-002	1.0M
-003	1.5M
-004	3.0M
-005	5.0M
-006	7.0M
-007	10.0M
-XXX	**Customized Cable Length**
-XX0	XX M
-XX5	XX.5 M

Wiring Diagram-M8 cable assembly Unshielded*

From Pin	Poles		To Pin
	3	4	
1	Brown	Brown	1
2	-	White	2
3	Blue	Blue	3
4	Black	Black	4

Wiring Diagram-M8 cable assembly Shielded*

From Pin	Poles		To Pin
	3	4	
1	Brown	Brown	1
2	-	White	2
3	Blue	Blue	3
4	Black	Black	4
Shielded	Metal Nut	Metal Nut	Shielded

* This wire diagram is applicable to all M8 cable assemblies listed in this flyer.

chanhvinh.com

PRODUCT OFFERINGS - **M8 Single Ended Cable Assembly**

M8 STR SINGLE ENDED CABLE ASSEMBLY

PN	Part Description	Pos	Type	Cable Material	Shielded/Unshielded
T4051320003-001	M8 FS 3P PUR CABLE 0.5M	3	Female Straight 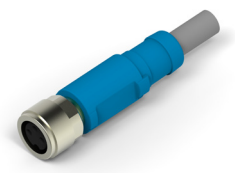	PUR	Unshielded
T4061320003-001	M8 FS 3P PUR CABLE 0.5M SH				Shielded
T4051310003-001	M8 FS 3P PVC CABLE 0.5M			PVC	Unshielded
T4061310003-001	M8 FS 3P PVC CABLE 0.5M SH				Shielded
T4051320004-001	M8 FS 4P PUR CABLE 0.5M	4		PUR	Unshielded
T4061320004-001	M8 FS 4P PUR CABLE 0.5M SH				Shielded
T4051310004-001	M8 FS 4P PVC CABLE 0.5M			PVC	Unshielded
T4061310004-001	M8 FS 4P PVC CABLE 0.5M SH				Shielded

PN	Part Description	Pos	Type	Cable Material	Shielded/Unshielded
T4051120003-001	M8 MS 3P PUR CABLE 0.5M	3	Male Straight 	PUR	Unshielded
T4061120003-001	M8 MS 3P PUR CABLE 0.5M SH				Shielded
T4051110003-001	M8 MS 3P PVC CABLE 0.5M			PVC	Unshielded
T4061110003-001	M8 MS 3P PVC CABLE 0.5M SH				Shielded
T4051120004-001	M8 MS 4P PUR CABLE 0.5M	4		PUR	Unshielded
T4061120004-001	M8 MS 4P PUR CABLE 0.5M SH				Shielded
T4051110004-001	M8 MS 0.5M 4P PVC CABLE 0.5M			PVC	Unshielded
T4061110004-001	M8 MS 4P PVC CABLE 0.5M SH				Shielded

M8 R/A SINGLE ENDED CABLE ASSEMBLY

PN	Part Description	Pos	Type	Cable Material	Shielded/Unshielded
T4051420003-001	M8 FR 3P PUR CABLE 0.5M	3	Female Right Angle 	PUR	Unshielded
T4061420003-001	M8 FR 3P PUR CABLE 0.5M SH				Shielded
T4051410003-001	M8 FR 3P PVC CABLE 0.5M			PVC	Unshielded
T4061410003-001	M8 FR 3P PVC CABLE 0.5M SH				Shielded
T4051420004-001	M8 FR 4P PUR CABLE 0.5M	4		PUR	Unshielded
T4061420004-001	M8 FR 4P PUR CABLE 0.5M SH				Shielded
T4051410004-001	M8 FR 4P PVC CABLE 0.5M			PVC	Unshielded
T4061410004-001	M8 FR 4P PVC CABLE 0.5M SH				Shielded

PN	Part Description	Pos	Type	Cable Material	Shielded/Unshielded
T4051220003-001	M8 MR 3P PUR CABLE 0.5M	3	Male Right Angle 	PUR	Unshielded
T4061220003-001	M8 MR 3P PUR CABLE 0.5M SH				Shielded
T4051210003-001	M8 MR 3P PVC CABLE0.5M			PVC	Unshielded
T4061210003-001	M8 MR 3P PVC CABLE 0.5M SH				Shielded
T4051220004-001	M8 MR 4P PUR CABLE 0.5M	4		PUR	Unshielded
T4061220004-001	M8 MR 4P PUR CABLE 0.5M SH				Shielded
T4051210004-001	M8 MR 4P PVC CABLE 0.5M			PVC	Unshielded
T4061210004-001	M8 MR 4P PVC CABLE 0.5M SH				Shielded

M8/M12 CONNECTOR SYSTEM

M12 Single Ended Cable Assembly

M12 cable assemblies T415/T416 series

STANDARD: IEC61076-2-101

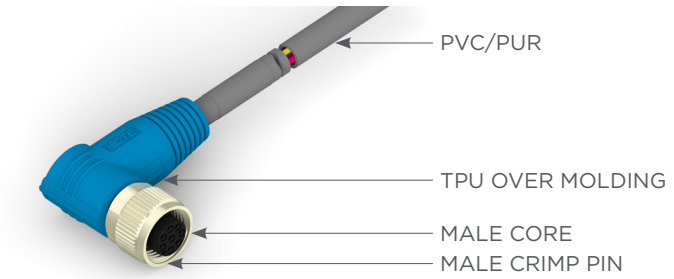

T41	S	A	X	W	Y	C	MN	-00L

S	Shield/Unshielded
5	Unshielded
6	Shield

A	Single/Double End
1	Single end
2	Double end

X	Connector Type for Single End
1	M12 Straight, Male
2	M12 Right angle, Male
3	M12 Straight, Female
4	M12 Right angle, Female

W	Cable Material Type
1	Black PVC
2	Gray PUR

MN	Position
03	3P
04	4P
05	5P
08	8P

Y	Connector Type for Double End
0	N/A
1	M12 Straight, Male
2	M12 Right angle, Male
3	M12 Straight, Female
4	M12 Right angle, Female

C	Code
0	A Code

-00L	Cable Length
-001	0.5M
-002	1.0M
-003	1.5M
-004	3.0M
-005	5.0M
-006	7.0M
-007	10.0M
-XXX	**Customized Cable Length**
-XX0	XX M
-XX5	XX.5 M

Wiring Diagram-M12 cable assembly Unshielded*

From Pin	Poles					To Pin
	2	3	4	5	8	
1	Brown	Brown	Brown	Brown	White	1
2	-	-	White	White	Brown	2
3	Blue	Blue	Blue	Blue	Green	3
4	-	Black	Black	Black	Yellow	4
5	-	-	-	Gray	Gray	5
6	-	-	-	-	Pink	6
7	-	-	-	-	Blue	7
8	-	-	-	-	Red	8

Wiring Diagram-M12 cable assembly Shielded*

From Pin	Poles					To Pin
	2	3	4	5	8	
1	Brown	Brown	Brown	Brown	White	1
2	-	-	White	White	Brown	2
3	Blue	Blue	Blue	Blue	Green	3
4	-	Black	Black	Black	Yellow	4
5	-	-	-	Gray	Gray	5
6	-	-	-	-	Pink	6
7	-	-	-	-	Blue	7
8	-	-	-	-	Red	8
Shielded	Metal Nut	Metal Nut	Metal Nut	Metal Nut	Metal Nut	Shielded

* This wire diagram is applicable to all M12 cable assemblies listed in this flyer.

chanhvinh.com

PRODUCT OFFERINGS - **M12 A-Code Single Ended Cable Assembly**

M12 A-CODE STR SINGLE ENDED CABLE ASSEMBLY

PN	Part Description	Code	Pos	Type	Cable Materials	Shield/Unshielded
T4151320002-001	M12 FS 2P PUR CABLE 0.5M	A	2	Female Straight 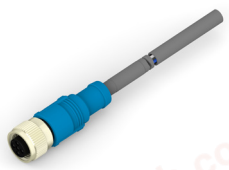	PUR	Unshielded
T4161320002-001	M12 FS 2P PUR CABLE 0.5M SH					Shielded
T4151310002-001	M12 FS 2P PVC CABLE 0.5M				PVC	Unshielded
T4161310002-001	M12 FS 2P PVC CABLE 0.5M SH					Shielded
T4151320003-001	M12 FS 3P PUR CABLE 0.5M		3		PUR	Unshielded
T4161320003-001	M12 FS 3P PUR CABLE 0.5M SH					Shielded
T4151310003-001	M12 FS 3P PVC CABLE 0.5M				PVC	Unshielded
T4161310003-001	M12 FS 3P PVC CABLE 0.5M SH					Shielded
T4151320004-001	M12 FS 4P PUR CABLE 0.5M		4		PUR	Unshielded
T4161320004-001	M12 FS 4P PUR CABLE 0.5M SH					Shielded
T4151310004-001	M12 FS 4P PVC CABLE 0.5M				PVC	Unshielded
T4161310004-001	M12 FS 4P PVC CABLE 0.5M SH					Shielded
T4151320005-001	M12 FS 5P PUR CABLE 0.5M		5		PUR	Unshielded
T4161320005-001	M12 FS 5P PUR CABLE 0.5M SH					Shielded
T4151310005-001	M12 FS 5P PVC CABLE 0.5M				PVC	Unshielded
T4161310005-001	M12 FS 5P PVC CABLE 0.5M SH					Shielded
T4151320008-001	M12 FS 8P PUR CABLE 0.5M		8		PUR	Unshielded
T4161320008-001	M12 FS 8P PUR CABLE 0.5M SH					Shielded
T4151310008-001	M12 FS 8P PVC CABLE 0.5M				PVC	Unshielded
T4161310008-001	M12 FS 8P PVC CABLE 0.5M SH					Shielded

PN	Part Description	Code	Pos	Type	Cable Materials	Shield/Unshielded
T4151120002-001	M12 MS 2P PUR CABLE 0.5M	A	2	Male Straight 	PUR	Unshielded
T4161120002-001	M12 MS 2P PUR CABLE 0.5M SH					Shielded
T4151110002-001	M12 MS 2P PVC CABLE 0.5M				PVC	Unshielded
T4161110002-001	M12 MS 2P PVC CABLE 0.5M SH					Shielded
T4151120003-001	M12 MS 3P PUR CABLE 0.5M		3		PUR	Unshielded
T4161120003-001	M12 MS 3P PUR CABLE 0.5M SH					Shielded
T4151110003-001	M12 MS 3P PVC CABLE 0.5M				PVC	Unshielded
T4161110003-001	M12 MS 3P PVC CABLE 0.5M SH					Shielded
T4151120004-001	M12 MS 4P PUR CABLE 0.5M		4		PUR	Unshielded
T4161120004-001	M12 MS 4P PUR CABLE 0.5M SH					Shielded
T4151110004-001	M12 MS 4P PVC CABLE 0.5M				PVC	Unshielded
T4161110004-001	M12 MS 4P PVC CABLE 0.5M SH					Shielded
T4151120005-001	M12 MS 5P PUR CABLE 0.5M		5		PUR	Unshielded
T4161120005-001	M12 MS 5P PUR CABLE 0.5M SH					Shielded
T4151110005-001	M12 MS 5P PVC CABLE 0.5M				PVC	Unshielded
T4161110005-001	M12 MS 5P PVC CABLE 0.5M SH					Shielded
T4151120008-001	M12 MS 8P PUR CABLE 0.5M		8		PUR	Unshielded
T4161120008-001	M12 MS 8P PUR CABLE 0.5M SH					Shielded
T4151110008-001	M12 MS 8P PVC CABLE 0.5M				PVC	Unshielded
T4161110008-001	M12 MS 8P PVC CABLE 0.5M SH					Shield

chanhvinh.com

M8/M12 CONNECTOR SYSTEM

M12 A-CODE R/A SINGLE ENDED CABLE ASSEMBLY

PN	Part Description	Code	Pos	Type	Cable Materials	Shield/Unshielded
T4151420002-001	M12 FR 2P PUR CABLE 0.5M	A	2	Female 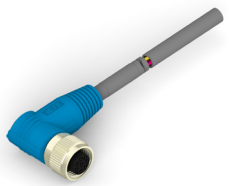	PUR	Unshielded
T4161420002-001	M12 FR 2P PUR CABLE 0.5M SH					Shield
T4151410002-001	M12 FR 2P PVC CABLE 0.5M				PVC	Unshielded
T4161410002-001	M12 FR 2P PVC CABLE 0.5M SH					Shield
T4151420003-001	M12 FR 3P PUR CABLE 0.5M		3		PUR	Unshielded
T4161420003-001	M12 FR 3P PUR CABLE 0.5M SH					Shield
T4151410003-001	M12 FR 3P PVC CABLE 0.5M				PVC	Unshielded
T4161410003-001	M12 FR 3P PVC CABLE 0.5M SH					Shield
T4151420004-001	M12 FR 4P PUR CABLE 0.5M		4		PUR	Unshielded
T4161420004-001	M12 FR 4P PUR CABLE 0.5M SH					Shield
T4151410004-001	M12 FR 4P PVC CABLE 0.5M				PVC	Unshielded
T4161410004-001	M12 FR 4P PVC CABLE 0.5M SH					Shield
T4151420005-001	M12 FR 5P PUR CABLE 0.5M		5		PUR	Unshielded
T4161420005-001	M12 FR 5P PUR CABLE 0.5M SH					Shield
T4151410005-001	M12 FR 5P PVC CABLE 0.5M				PVC	Unshielded
T4161410005-001	M12 FR 5P PVC CABLE 0.5M SH					Shield
T4151420008-001	M12 FR 8P PUR CABLE 0.5M		8		PUR	Unshielded
T4161420008-001	M12 FR 8P PUR CABLE 0.5M SH					Shield
T4151410008-001	M12 FR 8P PVC CABLE 0.5M				PVC	Unshielded
T4161410008-001	M12 FR 8P PVC CABLE 0.5M SH					Shield

PN	Part Description	Code	Pos	Type	Cable Materials	Shield/Unshielded
T4151220002-001	M12 MR 2P PUR CABLE 0.5M	A	2	Male 	PUR	Unshielded
T4161220002-001	M12 MR 2P PUR CABLE 0.5M SH					Shield
T4151210002-001	M12 MR 2P PVC CABLE 0.5M				PVC	Unshielded
T4161210002-001	M12 MR 2P PVC CABLE 0.5M SH					Shield
T4151220003-001	M12 MR 3P PUR CABLE 0.5M		3		PUR	Unshielded
T4161220003-001	M12 MR 3P PUR CABLE 0.5M SH					Shield
T4151210003-001	M12 MR 3P PVC CABLE 0.5M				PVC	Unshielded
T4161210003-001	M12 MR 3P PVC CABLE 0.5M SH					Shield
T4151220004-001	M12 MR 4P PUR CABLE 0.5M		4		PUR	Unshielded
T4161220004-001	M12 MR 4P PUR CABLE 0.5M SH					Shield
T4151210004-001	M12 MR 4P PVC CABLE 0.5M				PVC	Unshielded
T4161210004-001	M12 MR 4P PVC CABLE 0.5M SH					Shield
T4151220005-001	M12 MR 5P PUR CABLE 0.5M		5		PUR	Unshielded
T4161220005-001	M12 MR 5P PUR CABLE 0.5M SH					Shield
T4151210005-001	M12 MR 5P PVC CABLE 0.5M				PVC	Unshielded
T4161210005-001	M12 MR 5P PVC CABLE 0.5M SH					Shield
T4151220008-001	M12 MR 8P PUR CABLE 0.5M		8		PUR	Unshielded
T4161220008-001	M12 MR 8P PUR CABLE 0.5M SH					Shield
T4151210008-001	M12 MR 8P PVC CABLE 0.5M				PVC	Unshielded
T4161210008-001	M12 MR 8P PVC CABLE 0.5M SH					Shield

chanhvinh.com

PRODUCT OFFERINGS - M8 to M8 Double Ended Cable Assembly

M8 MALE STR – FEMALE STR DOUBLE ENDED CABLE ASSEMBLY

PN	Part Description	Pos	Type	Cable Materials	Shield/ Unshielded
T4052123003-001	M8 MS 3P – M8 FS 3P PUR CABLE 0.5M	3	MS-FS 	PUR	Unshielded
T4062123003-001	M8 MS 3P – M8 FS 3P PUR CABLE 0.5M SH				Shield
T4052113003-001	M8 MS 3P – M8 FS 3P PVC CABLE 0.5M			PVC	Unshielded
T4062113003-001	M8 MS 3P – M8 FS 3P PVC CABLE 0.5M SH				Shield
T4052123004-001	M8 MS 4P – M8 FS 4P PUR CABLE 0.5M	4		PUR	Unshielded
T4062123004-001	M8 MS 4P – M8 FS 4P PUR CABLE 0.5M SH				Shield
T4052113004-001	M8 MS 4P – M8 FS 4P PVC CABLE 0.5M			PVC	Unshielded
T4062113004-001	M8 MS 4P – M8 FS 4P PVC CABLE 0.5M SH				Shield

M8 MALE STR – FEMALE R/A DOUBLE ENDED CABLE ASSEMBLY

PN	Part Description	Pos	Type	Cable Materials	Shield/ Unshielded
T4052124003-001	M8 MS 3P – M8 FR 3P PUR CABLE 0.5M	3	MS-FR 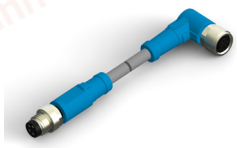	PUR	Unshielded
T4062124003-001	M8 MS 3P – M8 FR 3P PUR CABLE 0.5M SH				Shield
T4052114003-001	M8 MS 3P – M8 FR 3P PVC CABLE 0.5M			PVC	Unshielded
T4062114003-001	M8 MS 3P – M8 FR 3P PVC CABLE 0.5M SH				Shield
T4052124004-001	M8 MS 4P – M8 FR 4P PUR CABLE 0.5M	4		PUR	Unshielded
T4062124004-001	M8 MS 4P – M8 FR 4P PUR CABLE 0.5M SH				Shield
T4052114004-001	M8 MS 4P – M8 FR 4P PVC CABLE 0.5M			PVC	Unshielded
T4062114004-001	M8 MS 4P – M8 FR 4P PVC CABLE 0.5M SH				Shield

M8 MALE R/A – FEMALE R/A DOUBLE ENDED CABLE ASSEMBLY

PN	Part Description	Pos	Type	Cable Materials	Shield/ Unshielded
T4052224003-001	M8 MR 3P – M8 FR 3P PUR CABLE 0.5M	3	MR-FR 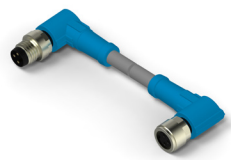	PUR	Unshielded
T4062224003-001	M8 MR 3P – M8 FR 3P PUR CABLE 0.5M SH				Shield
T4052214003-001	M8 MR 3P – M8 FR 3P PVC CABLE 0.5M			PVC	Unshielded
T4062214003-001	M8 MR 3P – M8 FR 3P PVC CABLE 0.5M SH				Shield
T4062224004-001	M8 MR 4P – M8 FR 3P PUR CABLE 0.5M	4		PUR	Unshielded
T4052224004-001	M8 MR 4P – M8 FR 3P PUR CABLE 0.5M SH				Shield
T4062214004-001	M8 MR 4P – M8 FR 3P PVC CABLE 0.5M			PVC	Unshielded
T4052214004-001	M8 MR 4P – M8 FR 3P PVC CABLE 0.5M SH				Shield

M8 MALE R/A – FEMALE STR DOUBLE ENDED CABLE ASSEMBLY

PN	Part Description	Pos	Type	Cable Materials	Shield/ Unshielded
T4062223003-001	M8 MR 3P – M8 FS 3P PUR CABLE 0.5M	3	MR-FS 	PUR	Unshield
T4052223003-001	M8 MR 3P – M8 FS 3P PUR CABLE 0.5M SH				Shielded
T4062213003-001	M8 MR 3P – M8 FS 3P PVC CABLE 0.5M			PVC	Unshield
T4052213003-001	M8 MR 3P – M8 FS 3P PVC CABLE 0.5M SH				Shielded
T4052223004-001	M8 MR 4P – M8 FS 3P PUR CABLE 0.5M	4		PUR	Unshielded
T4062223004-001	M8 MR 4P – M8 FS 3P PUR CABLE 0.5M SH				Shield
T4052213004-001	M8 MR 4P – M8 FS 3P PVC CABLE 0.5M			PVC	Unshielded
T4062213004-001	M8 MR 4P – M8 FS 3P PVC CABLE 0.5M SH				Shield

chanhvinh.com

PRODUCT OFFERINGS - **M12 to M12 A-Code Double Ended Cable Assembly**

M12 A-CODE MALE STR – FEMALE STR DOUBLE ENDED CABLE ASSEMBLY

PN	Part Description	Pos	Type	Code	Cable Materials	Shield/ Unshielded
T4152123002-001	M12 MS 2P – M12 FS 2P PUR CABLE 0.5M	2	MS-FS 	A	PUR	Unshielded
T4162123002-001	M12 MS 2P – M12 FS 2P PUR CABLE 0.5M SH					Shield
T4152113002-001	M12 MS 2P – M12 FS 2P PVC CABLE 0.5M				PVC	Unshielded
T4162113002-001	M12 MS 2P – M12 FS 2P PVC CABLE 0.5M SH					Shield
T4152123003-001	M12 MS 3P – M12 FS 3P PUR CABLE 0.5M	3			PUR	Unshielded
T4162123003-001	M12 MS 3P – M12 FS 3P PUR CABLE 0.5M SH					Shield
T4152113003-001	M12 MS 3P – M12 FS 3P PVC CABLE 0.5M				PVC	Unshielded
T4162113003-001	M12 MS 3P – M12 FS 3P PVC CABLE 0.5M SH					Shield
T4152123004-001	M12 MS 4P – M12 FS 4P PUR CABLE 0.5M	4			PUR	Unshielded
T4162123004-001	M12 MS 4P – M12 FS 4P PUR CABLE 0.5M SH					Shield
T4152113004-001	M12 MS 4P – M12 FS 4P PVC CABLE 0.5M				PVC	Unshielded
T4162113004-001	M12 MS 4P – M12 FS 4P PVC CABLE 0.5M SH					Shield
T4152123005-001	M12 MS 5P – M12 FS 5P PUR CABLE 0.5M	5			PUR	Unshielded
T4162123005-001	M12 MS 5P – M12 FS 5P PUR CABLE 0.5M SH					Shield
T4152113005-001	M12 MS 5P – M12 FS 5P PVC CABLE 0.5M				PVC	Unshielded
T4162113005-001	M12 MS 5P – M12 FS 5P PVC CABLE 0.5M SH					Shield

M12 A-CODE MALE R/A – FEMALE R/A DOUBLE ENDED CABLE ASSEMBLY

PN	Part Description	Pos	Type	Code	Cable Materials	Shield/ Unshielded
T4152224002-001	M12 MR 2P – M12 FR 2P PUR CABLE 0.5M	2	MS-FS 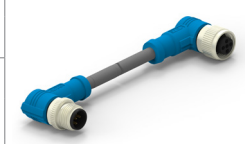	A	PUR	Unshielded
T4162224002-001	M12 MR 2P – M12 FR 2P PUR CABLE 0.5M SH					Shield
T4152214002-001	M12 MR 2P – M12 FR 2P PVC CABLE 0.5M				PVC	Unshielded
T4162214002-001	M12 MR 2P – M12 FR 2P PVC CABLE 0.5M SH					Shield
T4152224003-001	M12 MR 3P – M12 FR 3P PUR CABLE 0.5M	3			PUR	Unshielded
T4162224003-001	M12 MR 3P – M12 FR 3P PUR CABLE 0.5M SH					Shield
T4152214003-001	M12 MR 3P – M12 FR 3P PVC CABLE 0.5M				PVC	Unshielded
T4162214003-001	M12 MR 3P – M12 FR 3P PVC CABLE 0.5M SH					Shield
T4152224004-001	M12 MR 4P – M12 FR 4P PUR CABLE 0.5M	4			PUR	Unshielded
T4162224004-001	M12 MR 4P – M12 FR 4P PUR CABLE 0.5M SH					Shield
T4152214004-001	M12 MR 4P – M12 FR 4P PVC CABLE 0.5M				PVC	Unshielded
T4162214004-001	M12 MR 4P – M12 FR 4P PVC CABLE 0.5M SH					Shield
T4152224005-001	M12 MR 5P – M12 FR 5P PUR CABLE 0.5M	5			PUR	Unshielded
T4162224005-001	M12 MR 5P – M12 FR 5P PUR CABLE 0.5M SH					Shield
T4152214005-001	M12 MR 5P – M12 FR 5P PVC CABLE 0.5M				PVC	Unshielded
T4162214005-001	M12 MR 5P – M12 FR 5P PVC CABLE 0.5M SH					Shield

chanhvinh.com

PRODUCT OFFERINGS - **M12 to M12 A-Code Double Ended Cable Assembly**

M12 A-CODE MALE STR – FEMALE R/A DOUBLE ENDED CABLE ASSEMBLY

PN	Part Description	Pos	Type	Code	Cable Materials	Shield/ Unshielded
T4152124002-001	M12 MS 2P – M12 FR 2P PUR CABLE 0.5M	2	MS-FR 	A	PUR	Unshielded
T4162124002-001	M12 MS 2P – M12 FR 2P PUR CABLE 0.5M SH					Shield
T4152114002-001	M12 MS 2P – M12 FR 2P PVC CABLE 0.5M				PVC	Unshielded
T4162114002-001	M12 MS 2P – M12 FR 2P PVC CABLE 0.5M SH					Shield
T4152124003-001	M12 MS 3P – M12 FR 3P PUR CABLE 0.5M	3			PUR	Unshielded
T4162124003-001	M12 MS 3P – M12 FR 3P PUR CABLE 0.5M SH					Shield
T4152114003-001	M12 MS 3P – M12 FR 3P PVC CABLE 0.5M				PVC	Unshielded
T4162114003-001	M12 MS 3P – M12 FR 3P PVC CABLE 0.5M SH					Shield
T4152124004-001	M12 MS 4P – M12 FR 4P PUR CABLE 0.5M	4			PUR	Unshielded
T4162124004-001	M12 MS 4P – M12 FR 4P PUR CABLE 0.5M SH					Shield
T4152114004-001	M12 MS 4P – M12 FR 4P PVC CABLE 0.5M				PVC	Unshielded
T4162114004-001	M12 MS 4P – M12 FR 4P PVC CABLE 0.5M SH					Shield
T4152124005-001	M12 MS 5P – M12 FR 5P PUR CABLE 0.5M	5			PUR	Unshielded
T4162124005-001	M12 MS 5P – M12 FR 5P PUR CABLE 0.5M SH					Shield
T4152114005-001	M12 MS 5P – M12 FR 5P PVC CABLE 0.5M				PVC	Unshielded
T4162114005-001	M12 MS 5P – M12 FR 5P PVC CABLE 0.5M SH					Shield

M12 A-CODE MALE R/A – FEMALE STR DOUBLE ENDED CABLE ASSEMBLY

PN	Part Description	Pos	Type	Code	Cable Materials	Shield/ Unshielded
T4152223002-001	M12 MR 2P – M12 FS 2P PUR CABLE 0.5M	2	MR-FS 	A	PUR	Unshielded
T4162223002-001	M12 MR 2P – M12 FS 2P PUR CABLE 0.5M SH					Shield
T4152213002-001	M12 MR 2P – M12 FS 2P PVC CABLE 0.5M				PVC	Unshielded
T4162213002-001	M12 MR 2P – M12 FS 2P PVC CABLE 0.5M SH					Shield
T4152223003-001	M12 MR 3P – M12 FS 3P PUR CABLE 0.5M	3			PUR	Unshielded
T4162223003-001	M12 MR 3P – M12 FS 3P PUR CABLE 0.5M SH					Shield
T4152213003-001	M12 MR 3P – M12 FS 3P PVC CABLE 0.5M				PVC	Unshielded
T4162213003-001	M12 MR 3P – M12 FS 3P PVC CABLE 0.5M SH					Shield
T4152223004-001	M12 MR 4P – M12 FS 4P PUR CABLE 0.5M	4			PUR	Unshielded
T4162223004-001	M12 MR 4P – M12 FS 4P PUR CABLE 0.5M SH					Shield
T4152213004-001	M12 MR 4P – M12 FS 4P PVC CABLE 0.5M				PVC	Unshielded
T4162213004-001	M12 MR 4P – M12 FS 4P PVC CABLE 0.5M SH					Shield
T4152223005-001	M12 MR 5P – M12 FS 5P PUR CABLE 0.5M	5			PUR	Unshielded
T4162223005-001	M12 MR 5P – M12 FS 5P PUR CABLE 0.5M SH					Shield
T4152213005-001	M12 MR 5P – M12 FS 5P PVC CABLE 0.5M				PVC	Unshielded
T4162213005-001	M12 MR 5P – M12 FS 5P PVC CABLE 0.5M SH					Shield

chanhvinh.com

PRODUCT OFFERINGS - **M8 to M12 Double Ended Cable Assembly**

M8 FEMALE STR – M12 MALE STR DOUBLE ENDED CABLE ASSEMBLY

PN	Part Description	Pos	Type	Cable Materials	Shield/Unshielded
T4052325003-001	M8 3P FS – M12 3P MS PUR CABLE 0.5M	3	M8 FS - M12 MS 	PUR	Unshielded
T4052315003-001	M8 3P FS – M12 3P MS PVC CABLE 0.5M			PVC	
T4052325004-001	M8 4P FS – M12 4P MS PUR CABLE 0.5M	4		PUR	
T4052315004-001	M8 4P FS – M12 4P MS PVC CABLE 0.5M			PVC	

M8 FEMALE STR – M12 MALE R/A DOUBLE ENDED CABLE ASSEMBLY

PN	Part Description	Pos	Type	Cable Materials	Shield/Unshielded
T4052326003-001	M8 3P FS – M12 3P MR PUR CABLE 0.5M	3	M8 FS -M12 MR 	PUR	Unshielded
T4052316003-001	M8 3P FS – M12 3P MR PVC CABLE 0.5M			PVC	
T4052326004-001	M8 4P FS – M12 4P MR PUR CABLE 0.5M	4		PUR	
T4052316004-001	M8 4P FS – M12 4P MR PVC CABLE 0.5M			PVC	

M8 FEMALE R/A – M12 MALE STR DOUBLE ENDED CABLE ASSEMBLY

PN	Part Description	Pos	Type	Cable Materials	Shield/Unshielded
T4052425003-001	M8 3P FR – M12 3P MS PUR CABLE 0.5M	3	M8 FR -M12 MS 	PUR	Unshielded
T4052415003-001	M8 3P FR – M12 3P MS PVC CABLE 0.5M			PVC	
T4052425004-001	M8 4P FR – M12 4P MS PUR CABLE 0.5M	4		PUR	
T4052415004-001	M8 4P FR – M12 4P MS PVC CABLE 0.5M			PVC	

M8 FEMALE R/A – M12 MALE R/A DOUBLE ENDED CABLE ASSEMBLY

PN	Part Description	Pos	Type	Cable Materials	Shield/Unshielded
T4052426003-001	M8 3P FR – M12 3P MR PUR CABLE 0.5M	3	M8 FR -M12 MR 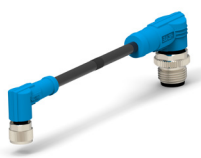	PUR	Unshielded
T4052416003-001	M8 3P FR – M12 3P MR PVC CABLE 0.5M			PVC	
T4052426004-001	M8 4P FR – M12 4P MR PUR CABLE 0.5M	4		PUR	
T4052416004-001	M8 4P FR – M12 4P MR PVC CABLE 0.5M			PVC	

chanhvinh.com

PRODUCT OFFERINGS - **M8 to M12 Double Ended Cable Assembly**

M8 MALE STR – M12 FEMALE STR DOUBLE ENDED CABLE ASSEMBLY

PN	Part Description	Pos	Type	Cable Materials	Shield/Unshielded
T4052127003-001	M8 3P MS – M12 3P FS PUR CABLE 0.5M	3	M8 MS -M12 FS 	PUR	Unshielded
T4052117003-001	M8 3P MS – M12 3P FS PVC CABLE 0.5M			PVC	
T4052127004-001	M8 4P MS – M12 4P FS PUR CABLE 0.5M	4		PUR	
T4052117004-001	M8 4P MS – M12 4P FS PVC CABLE 0.5M			PVC	

M8 MALE STR – M12 FEMALE R/A DOUBLE ENDED CABLE ASSEMBLY

PN	Part Description	Pos	Type	Cable Materials	Shield/Unshielded
T4052128003-001	M8 3P MS – M12 3P FR PUR CABLE 0.5M	3	M8 MS -M12 FR 	PUR	Unshielded
T4052118003-001	M8 3P MS – M12 3P FR PVC CABLE 0.5M			PVC	
T4052128004-001	M8 4P MS – M12 4P FR PUR CABLE 0.5M	4		PUR	
T4052118004-001	M8 4P MS – M12 4P FR PVC CABLE 0.5M			PVC	

M8 MALE R/A – M12 FEMALE STR DOUBLE ENDED CABLE ASSEMBLY

PN	Part Description	Pos	Type	Cable Materials	Shield/Unshielded
T4052227003-001	M8 3P MR – M12 3P FS PUR CABLE 0.5M	3	M8 MR -M12 FS 	PUR	Unshielded
T4052217003-001	M8 3P MR – M12 3P FS PVC CABLE 0.5M			PVC	
T4052227004-001	M8 4P MR – M12 4P FS PUR CABLE 0.5M	4		PUR	
T4052217004-001	M8 4P MR – M12 4P FS PVC CABLE 0.5M			PVC	

M8 MALE R/A – M12 FEMALE R/A DOUBLE ENDED CABLE ASSEMBLY

PN	Part Description	Pos	Type	Cable Materials	Shield/Unshielded
T4052228003-001	M8 3P MR – M12 3P FR PUR CABLE 0.5M	3	M8 MR - M12 FR 	PUR	Unshielded
T4052218003-001	M8 3P MR – M12 3P FR PVC CABLE 0.5M			PVC	
T4052228004-001	M8 4P MR – M12 4P FR PUR CABLE 0.5M	4		PUR	
T4052218004-001	M8 4P MR – M12 4P FR PVC CABLE 0.5M			PVC	

chanhvinh.com

Cable Specifications

M8 UNSHIELDED CABLE ASSEMBLIES

	M8 cable assembly unshielded PVC series		M8 cable assembly unshielded PUR series	
Image	PVC 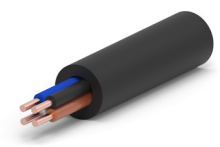		PUR 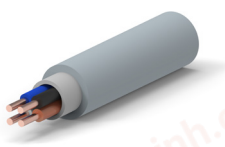	
No. of conductors	3	4	3	4
Jacket material	PVC		PUR	
Jacket color	Black		Gray	
Cross section	24AWG		24AWG	
Contruction	32/0.10mm		32/0.10mm	
Temp range-Fixed	-10°C-80°C		-40°C-80°C	
Temp range-Flexible	-5°C-80°C		-25°C-80°C	
Features	Flame Retardant, Rohs		Flame Retardant, oil resistant, Rohs	
Standards	UL758, UL1581, UL2464		UL758, UL1581, UL20549	

M8 SHIELDED CABLE ASSEMBLIES

	M8 cable assembly shielded PVC series		M8 cable assembly shielded PUR series	
Image	PVC 		PUR 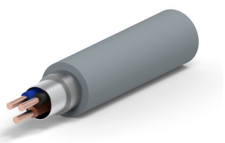	
No. of conductors	3	4	3	4
Jacket material	PVC		PUR	
Jacket color	Black		Gray	
Cross section	24AWG		24AWG	
Contruction	Construction: 32/0.10mm Shield1: AL/Mylar Shield2: Tinned copper braid		Construction: 32/0.10mm Shield1: AL/Mylar Shield2: Tinned copper braid	
Temp range-Fixed	-10°C-80°C		-40°C-80°C	
Temp range-Flexible	-5°C-80°C		-25°C-80°C	
Features	Flame Retardant, Rohs		Flame Retardant, oil resistant, Rohs	
Standards	UL758, UL1581, UL2464		UL758, UL1581, UL20549	

M8/M12 CONNECTOR SYSTEM

M12 UNSHIELDED CABLE ASSEMBLIES

	M12 PVC cable assembly unshielded series					M12 PUR cable assembly unshielded series				
Image	PVC 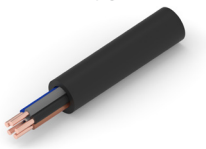					PUR 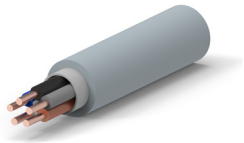				
No. of conductors	2	3	4	5	8	2	3	4	5	8
Jacket material	PVC					PUR				
Jacket color	Black					Gray				
Cross section	22AWG					22AWG	22AWG	22AWG	22AWG	24AWG
Contruction	43/0.10mm	43/0.10mm	43/0.10mm	43/0.10mm	32/0.10mm	43/0.10mm	43/0.10mm	43/0.10mm	43/0.10mm	32/0.10mm
Temp range-Fixed	-10°C-80°C					-40°C-80°C				
Temp range-Flexible	-5°C-80°C					-25°C-80°C				
Features	Flame Retardant, Rohs					Flame Retardant, oil resistant, Rohs				
Standards	UL758, UL1581, UL2464					UL758, UL1581, UL20549				

M12 SHIELDED CABLE ASSEMBLIES

	M12 cable assembly shielded series					M12 cable assembly shielded series				
Image	PVC 					PUR 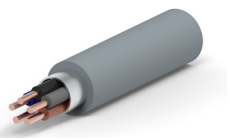				
No. of conductors	2	3	4	5	8	2	3	4	5	8
Jacket material	PVC					PUR				
Jacket color	Black					Gray				
Cross section	22AWG	22AWG	22AWG	22AWG	24AWG	22AWG	22AWG	22AWG	22AWG	24AWG
Contruction	Construction: 43/0.10mm Shield1: AL/Mylar Shield2: Tinned copper braid				Construction: 32/0.10mm Shield1: AL/Mylar Shield2: Tinned copper braid	Construction: 43/0.10mm Shield1: AL/Mylar Shield2: Tinned copper braid				Construction: 2/0.10mm Shield1: AL/Mylar Shield2: Tinned copper braid
Temp range-Fixed	-10°C-80°C					-40°C-80°C				
Temp range-Flexible	-5°C-80°C					-25°C-80°C				
Features	Flame Retardant, Rohs					Flame Retardant, oil resistant, Rohs				
Standards	UL758, UL1581, UL2464					UL758, UL1581, UL20549				

chanhvinh.com

M12 FIELDBUS CABLE ASSEMBLY SOLUTIONS

TE now complements its' Sensor/Actuator cable assemblies with Data Communication solutions by introducing the Fieldbus cable assemblies. First developed more than two decades ago, many different field networks still continue to dominate Industrial automation and process control. Fieldbus networks seems to be very practical at the lowest level of the automation pyramid and are critical element of Industry 4.0, IIoT and beyond for end devices that do not require the bandwidth but do need the ability to have power and signal in the same cable.



The new A and B-coded M12 cable assemblies comply with Profibus, DeviceNet and CC-link protocols, offering multiple options for a variety of needs that makes TE an one-stop shop. They have 360-degree shielding against EMI for complete protection for signal and data transmission, and are rated IP67 for resistance to dust and water. The assemblies are overmolded in either PVC or halogen-free polyurethane (PUR) cables, suitable for drag chain applications or torsional stress, depending on customer performance requirements.

Assemblies are produced in many customer-specific plug-and-play configurations to enable design flexibility and quick installation in most industrial environments. Applications for the new assemblies lie in numerous areas of industry, including process control systems, robotics and automation, production equipment, machine tools and material handling.

TE's Fieldbus M12 cable assemblies are available as single-ended or double-ended, in straight and angled versions, all shielded variants. Various cable types are offered depending on the application requirements. The predefined offering in length of 0.5, to 15 meters covers a vast range of customer needs on the market, while customized cable assemblies in different lengths provide a solution for specific needs. All can be used in combination with TE's male/female connectors.

KEY FEATURES

- IP67 rated: dust and waterproof
- Overmolded PVC or PUR cable assemblies/Shielded
- Key options: A, B coded
- M12 Positions: 2, 4, 5 pos
- M12 B-coded 5-pole for Profibus applications
- M12 A-code 5pos for DeviceNet applications
- M12 A-code 4pos for CC-link applications
- Cable length options: 0.5 m, 1 m, 2m, 4m, 6m, 8m, 10m and 15m.

BENEFITS

- Maximum signal transmission
- Reduced noise and interference
- Maximum installation versatility
- Cable types variations for drag chain and torsion

chanhvinh.com

M8/M12 CONNECTOR SYSTEM

APPLICATIONS

- Industrial communications
- Industrial machinery
- Industrial automation
- Machine tools
- Robotics
- Material handling
- Process control systems

ELECTRICAL

- Voltage and current rating:
- M12 A code 4 poles: 250V/4A
- M12 A code 5 poles: 60V/4A
- M12 B code 2 poles: 250V/4A

MECHANICAL

- Durability: 100 cycles
- Degree of protection: IP67
- Temperature ratings:
  - Profibus PUR:
    Fixed: -40°C to +80°C
    Flexible: -40°C to +75°C
- Profibus PUR torsion:
  Operating temperature -25°C to +75°C
- DeviceNet PVC:
  Operating temperature -20°C to +75°C
- DeviceNet PUR:
  Operating temperature -40°C to +80°C
- CC-Link PVC:
  Operating temperature -30°C to +60°C

MATERIALS

- Contact: Brass, Gold plating
- Nut & Shells: Brass, Nickel plating
- O-ring: Silicon rubber
- Over-molding: TPU/PVC
- Housing: PA
- PROFIBUS® M12 Cable Assy B-code 2-pole 1x2x22AWG PUR Drag Chain
- PROFIBUS®M12 Cable Assy B-code 2-pole 1x2x24AWG PUR Torsion
- DeviceNet™ M12 Cable Assy A-code 5-pole 2x24AWG+2x22AWG Thin Violet PUR
- DeviceNet™ M12 Cable Assy A-code 5-pole 2x24AWG+2x22AWG Thin Gray PVC
- CC-Link® M12 Cable Assy A-code 4pos 3 conductor 20AWG Red PVC

SPECIFICATIONS

- Product specification: 108-106140
- Application specification: 114-137144
- UL standard: UL2238
- IEC 61076-2-101: Detail specification for M12 connectors with screw-locking
- IEC 60512: Electromechanical components for electronic equipment; basic testing procedure and measuring methods
- IEC-60529: Degree of protection provided by enclosures (IP Code)

M8/M12 CONNECTOR SYSTEM

PRODUCT OFFERINGS - CC-LINK M12 A-CODE 4POS CABLE ASSEMBLIES SINGLE ENDED

Part Number	Part Description	Application	Code	POS	Type	Cable Material	Shielded
TAA541B1411-001	M12A4-MS-PVC-0.5M	CC-Link (10Mbs)	A	4	Male / Female Straight  Male / Female R/A 	PVC Red 20AWG  	Yes
TAA543B1411-001	M12A4-FS-PVC-0.5M						
TAA544B1411-001	M12A4-FR-PVC-0.5M						
TAA542B1411-001	M12A4-MR-PVC-0.5M						

PRODUCT OFFERINGS - CC-LINK M12 A-CODE 4POS CABLE ASSEMBLIES DOUBLE ENDED

Part Number	Part Description	Application	Code	POS	Type	Cable Material	Shielded
TAA545B1411-001	M12A4-MS-FS-PVC-0.5M	CC-Link (10Mbs)	A	4	MS-FS  MR-FS / MS-FR 	PVC Red 20AWG  	Yes
TAA54AB1411-001	M12A4-MR-FS-PVC-0.5M						
TAA546B1411-001	M12A4-MS-FR-PVC-0.5M						

PRODUCT OFFERINGS - DEVICENET M12 A-CODE 5POS CABLE ASSEMBLIES SINGLE ENDED PUR

Part Number	Part Description	Application	Code	POS	Type	Cable Material	Shielded
TAA751A5501-001	M12A5-MS-PUR-0.5M	DeviceNet (500Kbs)	A	5	Male / Female Straight  Male / Female R/A 	PUR Violet 2x24AWG+2x22 AWG  	Yes
TAA753A5501-001	M12A5-FS-PUR-0.5M						
TAA754A5501-001	M12A5-FR-PUR-0.5M						
TAA752A5501-001	M12A5-MR-PUR-0.5M						

chanhvinh.com

M8/M12 CONNECTOR SYSTEM

PRODUCT OFFERINGS - DEVICENET M12 A-CODE 5POS CABLE ASSEMBLIES DOUBLE ENDED PUR

Part Number	Part Description	Application	Code	POS	Type	Cable Material	Shielded
TAA755A5501-001	M12A5-MS-FS-PUR-0.5M	DeviceNet (500Kbs)	A	5	MS-FS 	PUR Violet 2x24AWG+2x 22AWG 	Yes
TAA75AA5501-001	M12A5-MR-FS-PUR-0.5M				MR-FS / MS-FR 		
TAA756A5501-001	M12A5-MS-FR-PUR-0.5M						

PRODUCT OFFERINGS - DEVICENET M12 A-CODE 5POS CABLE ASSEMBLIES SINGLE ENDED PVC

Part Number	Part Description	Application	Code	POS	Type	Cable Material	Shielded
TAA751A1611-001	M12A5-MS-PVC-0.5M	DeviceNet (500Kbs)	A	5	Male / Female Straight 	PVC Gray 2x24AWG+2x22AWG 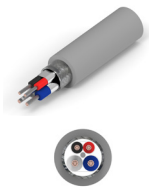	Yes
TAA753A1611-001	M12A5-FS-PVC-0.5M						
TAA754A1611-001	M12A5-FR-PVC-0.5M				Male / Female R/A 		
TAA752A1611-001	M12A5-MR-PVC-0.5M						

PRODUCT OFFERINGS - DEVICENET M12 A-CODE 5POS CABLE ASSEMBLIES DOUBLE ENDED PVC

Part Number	Part Description	Application	Code	POS	Type	Cable Material	Shielded
TAA755A1611-001	M12A5-MS-FS-PVC-0.5M	DeviceNet (500Kbs)	A	5	MS-FS 	PVC Gray 2x24AWG+2x22 AWG 	Yes
TAA75AA1611-001	M12A5-MR-FS-PVC-0.5M				MR-FS / MS-FR 		
TAA756A1611-001	M12A5-MS-FR-PVC-0.5M						

M8/M12 CONNECTOR SYSTEM

PRODUCT OFFERINGS - PROFIBUS M12 B-CODE 2-POS CABLE ASSEMBLIES SINGLE ENDED PUR TORSION

Part Number	Part Description	Application	Code	POS	Type	Cable Material	Shielded
TAB62146501-001	M12B2-MS-PUR TORS-0.5M	Profibus DP (12Mbs)	B	2	Male / Female Straight  Male / Female R/A 	PUR Torsion 22AWG Violet  	Yes
TAB62346501-001	M12B2-FS-PUR TORS-0.5M						
TAB62446501-001	M12B2-FR-PUR TORS-0.5M						
TAB62246501-001	M12B2-MR-PUR TORS-0.5M						

PRODUCT OFFERINGS - PROFIBUS M12 B-CODE 2-POS CABLE ASSEMBLIES DOUBLE ENDED PUR TORSION

Part Number	Part Description	Application	Code	POS	Type	Cable Material	Shielded
TAB62546501-001	M12B2-MS-FS-PUR/T-0.5M	Profibus DP (12Mbs)	B	2	MS-FS  MR-FS / MS-FR 	PUR Torsion 22AWG Violet  	Yes
TAB62A46501-001	M12B2-MR-FS-PUR/T-0.5M						
TAB62646501-001	M12B2-MS-FR-PUR/T-0.5M						

PRODUCT OFFERINGS - PROFIBUS M12 B-CODE 2-POS CABLE ASSEMBLIES SINGLE ENDED PUR FLEX/ DRAG CHAIN

Part Number	Part Description	Application	Code	POS	Type	Cable Material	Shielded
TAB62135501-001	M12B2-MS-PUR Flex-0.5M	Profibus DP (12Mbs)	B	2	Male / Female Straight  Male / Female R/A 	PUR Flex/Drag Chain 24AWG Violet  	Yes
TAB62335501-001	M12B2-FS-PUR Flex-0.5M						
TAB62435501-001	M12B2-FR-PUR Flex-0.5M						
TAB62235501-001	M12B2-MR-PUR Flex-0.5M						

M8/M12 CONNECTOR SYSTEM

PRODUCT OFFERINGS - PROFIBUS M12 B-CODE 2-POS CABLE ASSEMBLIES DOUBLE ENDED PUR FLEX/DRAG CHAIN

Part Number	Part Description	Application	Code	POS	Type	Cable Material	Shielded
TAB62535501-001	M12B2-MS-FS-PURFlex-0.5M	Profibus DP (12Mbs)	B	2	MS-FS  MR-FS / MS-FR 	PUR Flex/Drag Chain 24AWG Violet  	Yes
TAB62A35501-001	M12B2-MR-FS-PURFlex0.5M						
TAB62635501-001	M12B2-MS-FR-PURFlex-0.5M						

00L	Cable Length
-001	0.5M
-002	1.0M
-020	2.0M
-040	4.0M
-060	6.0M
-080	8.0M
-007	10.0M
-150	15.0M

-XXX	Customized Cable Length
-XX0	XXM
-XX5	XX.5M

chanhvinh.com

M12 INDUSTRIAL ETHERNET D-CODE CABLE ASSEMBLIES

TE Connectivity offers M12 data cable assemblies with D-code interfaces that support Ethernet protocols as part of its package of Industrial Ethernet and Fieldbus solutions. The Cat5e cable jackets vary between PVC, PUR and TPE offer a unique solution toward satisfying the stringent needs of motion systems supporting both flexing and stationary industrial Ethernet requirements.



TE's portfolio is further complemented with overmolded M12 D-code to RJ45 configurations which are key components to an overall Industrial Ethernet application and designed for connection within control cabinets, machinery and in-the-field operations.

This makes it the one-stop shop for M8/M12 cable assemblies for Industrial Network communications.

TE has enriched its already large offering in Fieldbus connectivity solutions (based on Profibus, DeviceNet, CanOpen and CC-link) with Industrial Ethernet protocols such as Profinet, EtherCAT, Ethernet/IP and SERCOS-III.

FEATURES

- Jacketing is in halogen-free flame-retardant thermoplastic polyurethane (PUR) high flex TPE, PVC or FRNC (flame retardant, non-corrosive) materials and TPE high-flex cables
- PVC provides a competitive and economic solution for occasional movement or vibration, but PUR is more suited to more demanding applications in for example, drag chains and harsh environments where operational reliability is crucial
- Category 5e cables can realize transmission rates of 100Mbps to meet network requirements in the field and at supervisory management levels
- The new assemblies are available with several standard cable length options from 0.5m through to 30m
- Enclosure rating of IP67 rating for dust-tight and waterproof applications ensure efficient, high-quality and reliable connectivity and high integrity signal transmission
- 360 degrees shielding
- Depending on the material, the assemblies withstand up to 3 million flexes, machine oils, abrasion and UV
- Our TPE cables can withstand 5M cycles for C-track applications

FEATURES

- Category 5e cables can realize transmission rates of 100Mbps to meet network requirements in the field and at supervisory management levels
- The new assemblies are available with several standard cable length options from 0.5m through to 30m

BENEFITS

- Unit remains protected and fully operational in most industrial applications
- Secured signal connections and data trasnmission
- Ensure the application of cable assembly in flexible installation environment
- Ensure the application of cable assembly in torsion application environment
- Oil-resistant for in oil industrial applications
- Application of UV-resistant environment

M8/M12 CONNECTOR SYSTEM

APPLICATIONS

- Industrial communications
- Process control systems
- Industrial machinery
- Industrial automation
- Machine tools
- Robotics
- Material handling

MATERIALS

- Contact: Brass, Gold Plating 30um
- Nut & Shells: Brass, Nickel plating
- O-ring: Silicon rubber
- Over-molding: PUR/PVC
- Housing: PA
- PA66 for M12 connector housing
- TPU or PVC material for cable assembly over-molding depending cable jacket type
- PP for inner over-molding
- Cable Jacket materials: PUR, PVC, FRNC and TPE

ELECTRICAL

- M12 D code 4 poles: 30V/1.5A
- Voltage proof: 1400V
- Insulation resistance: 100MΩ min
- 30° C max under loaded rating current
- 2pair is for D-Code CAT5E performance, which is based on channel level

MECHANICAL

Waterproof:

- IP67 rating for D code M12 cable side: IP20 for RJ45 male side
- Mating / Un-mating force: 15N/15N max.
- Sinusoidal vibration meet IEC60512, test 6d
- Mechanical shock meet EIA364-27

Durability:

- 1M for PUR drag chain cable
- 3M for TPE torsion cable
- 5M for TPE C-track

Temperature Ratings:

- Industrial Ethernet Profinet/SERCOS III Type B PVC: Cat5e 22AWG
  - Operating temperature -40°C to +80°C (fixed)
    -20°C to +60°C (flexible)
- Industrial Ethernet Profinet Type C PUR: PUR Cat5e 22AWG
  - Operating temperature -30°C to +70°C (fixed)
    -20°C to +60°C (flexible)
- Industrial Ethernet/IP Hi-Flex Cat5e TPE SF/UTP 24AWG
- Industrial Ethernet/IP Hi-Flex Cat5e TPE U/UTP 24AWG
  - Operating temperature: -20°C to +80°C (fixed)
    -40°C to +80°C (flexible)

SPECIFICATIONS

- UL1863
- IEC 61076-2-101: Detail specification for M12 connectors with screw-locking (but True Position 0.1mm requirement for male side is not required)
- IEC 60512: Electromechanical Components For Electronic Equipment; Basic testing procedure and measuring methods
- IEC-60529: Degree of protection provided by enclosures (IP Code)
- ISO/IEC 11801 category 5e



chanhvinh.com

PART NUMBER LIST

M12 ETHERNET D-CODE 4POS CABLE ASSEMBLIES DOUBLE ENDED TYPE C PUR & TPE

Part Number	Part Description	Application	Code	POS	Type	Cable Material	Shielded
TAD14545101-001	M12D4-MS-FS-PUR-22SH-TYPE C-0.5M	Profinet, EtherCAT, Ethernet/IP (up to 100Mbs)	D	4	M12 MS-FS 	CAT5E TYPE C, PUR, 22AWG, GREEN 	Yes
TAD14541111-001	M12D4-MS-FS-PVC-22SH-TYPE B-0.5M				M12 MS-FS 	CAT5E TYPE B, PVC, 22AWG, GREEN 	
TAD1453A201-001	M12D4-MS-FS-TPE-24SH-0.5M				M12 MS-FS 	CAT5E TPE, SF/UTP 24AWG TEAL 	
TAD2453A201-001	M12D4-MS-FS-TPE-24UNSH-0.5M				M12 MS-FS 	CAT5E TPE, U/UTP 24AWG, TEAL 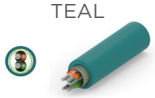	No

M12 ETHERNET D-CODE 4POS CABLE ASSEMBLIES DOUBLE ENDED TO RJ45 TYPE C PUR & TPE

Part Number	Part Description	Application	Code	POS	Type	Cable Material	Shielded
TCD14745101-001	M12D4-MS-RJ45-PUR-22SH-TYPE C-0.5M	Profinet, EtherCAT, Ethernet/IP (up to 100Mbs)	D	4	M12 MS - RJ45 	CAT5E TYPE C, PUR, 22AWG, GREEN 	Yes
TCD14741111-001	M12D4-MS-RJ45-PVC-22SH-TYPE B-0.5M				M12 MS - RJ45 	CAT5E TYPE B, PVC, 22AWG, GREEN 	
TCD1473A201-001	M12D4-MS-RJ45-TPE-24SH-0.5M				M12 MS - RJ45 	CAT5E TPE, SF/UTP 24AWG TEAL 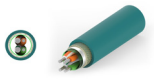	
TAD2473A201-001	M12D4-MS-RJ45-TPE-24UNSH-0.5M				M12 MS - RJ45 	CAT5E TPE, U/UTP 24AWG, TEAL 	No

chanhvinh.com

M8/M12 CONNECTOR SYSTEM

M12 ETHERNET D-CODE 4POS CABLE ASSEMBLIES SINGLE ENDED TPE

(Extended to TPE jacketed cables; for PUR and PVC refer to original M8M12 Cordset catalog)

Part Number	Part Description	Application	Code	POS	Type	Cable Material	Shielded
TAD2413A201-001	M12D4-MS-TPE USH-0.5M	Profinet, EtherCAT, Ethernet/IP (up to 100Mbs)	D	4	Male Straight (MS) 	CAT5E TPE SF/UTP 24AWG, TEAL 	Yes
TAD2423A201-001	M12D4-MR-TPE USH-0.5M				Male Right Angle (MR) 		
TAD1413A201-001	M12D4-MS-TPE SH-0.5M				Male Straight (MS) 	CAT5E TPE U/UTP 24AWG, TEAL 	No
TAD1423A201-001	M12D4-MR-TPE SH-0.5M				Male Right Angle (MR) 		

M12 ETHERNET D-CODE 4POS CABLE ASSEMBLIES DOUBLE ENDED TPE

(Extended to TPE jacketed cables; for PUR and PVC refer to original M8M12 Cordset catalog)

Part Number	Part Description	Application	Code	POS	Type	Cable Material	Shielded
TAD1473A201-001	M12D4-MS-MS-TPE SH-0.5M	Profinet, EtherCAT, Ethernet/IP (up to 100Mbs)	D	4	MS-MS 	CAT5E TPE SF/UTP 24AWG, TEAL 	Yes
TAD1483A201-001	M12D4-MS-MR-TPE SH-0.5M				MS-MR 		
TAD2473A201-001	M12D4-MS-MS-TPE USH-0.5M				MS-MS 	CAT5E TPE U/UTP 24AWG, TEAL 	No
TAD2483A201-001	M12D4-MS-MR-TPE USH-0.5M				MS-MR 		

chanhvinh.com

M8/M12 CONNECTOR SYSTEM

PRODUCT OFFERINGS - M12 ETHERNET D-CODE 4-POS CABLE ASSEMBLIES SINGLE ENDED TYPE C PUR

Part Number	Part Description	Application	Code	POS	Type	Cable Material	Shielded
TAD14145101-001	M12D4-MS-PUR TYPE C GREEN-0.5M	Profinet, EtherCAT , Ethernet/IP (up to 100Mbs)	D	4	Male Straight 	CAT5E TYPE C, PUR, 22AWG, GREEN  	Yes
TAD14245101-001	M12D4-MR-PUR TYPE C GREEN-0.5M				Male R/A 		

PRODUCT OFFERINGS - M12 ETHERNET D-CODE 4-POS CABLE ASSEMBLIES DOUBLE ENDED TYPE C PUR

Part Number	Part Description	Application	Code	POS	Type	Cable Material	Shielded
TAD14745101-001	M12D4-MS-MS-PUR TYPE C GREEN-0.5M	Profinet, EtherCAT , Ethernet/IP (up to 100Mbs)	D	4	MS-MS 	CAT5E TYPE C, PUR, 22AWG, GREEN  	Yes
TAD14845101-001	M12D4-MS-MR-PUR TYPE C GREEN-0.5M				MS-MR 		

PRODUCT OFFERINGS - M12 ETHERNET D-CODE 4-POS CABLE ASSEMBLIES SINGLE ENDED TYPE B FRNC

Part Number	Part Description	Application	Code	POS	Type	Cable Material	Shielded
TAD14147101-001	M12D4-MS-FRNC TYPE B GREEN-0.5M	Profinet, EtherCAT , Ethernet/IP (up to 100Mbs)	D	4	Male Straight 	CAT5E TYPE B, FRNC, 22AWG, GREEN  	Yes
TAD14247101-001	M12D4-MR-FRNC TYPE B GREEN-0.5M				Male R/A 		

M8/M12 CONNECTOR SYSTEM

PRODUCT OFFERINGS - M12 ETHERNET D-CODE 4-POS CABLE ASSEMBLIES DOUBLE ENDED TYPE B FRNC

Part Number	Part Description	Application	Code	POS	Type	Cable Material	Shielded
TAD14747101-001	M12D4-MS-MS-FRNC TYPE B GREEN-0.5M	Profinet, EtherCAT , Ethernet/IP (up to 100Mbs)	D	4	MS-MS 	CAT5E TYPE B, FRNC, 22AWG, GREEN 	Yes
TAD14847101-001	M12D4-MS-MR-FRNC TYPE B GREEN-0.5M				MS-MR 		

PRODUCT OFFERINGS - M12 ETHERNET D-CODE 4-POS CABLE ASSEMBLIES SINGLE ENDED TYPE B PVC

Part Number	Part Description	Application	Code	POS	Type	Cable Material	Shielded
TAD14141111-001	M12D4-MS-PVC TYPE B-0.5M	Profinet, EtherCAT , Ethernet/IP (up to 100Mbs)	D	4	Male Straight 	CAT5E TYPE B, PVC, 22AWG, GREEN 	Yes
TAD14241111-001	M12D4-MR-PVC TYPE B-0.5M				Male R/A 		

PRODUCT OFFERINGS - M12 ETHERNET D-CODE 4-POS CABLE ASSEMBLIES DOUBLE ENDED TYPE B PVC

Part Number	Part Description	Application	Code	POS	Type	Cable Material	Shielded
TAD14741111-001	M12D4-MS-MS-PVC TYPE B-0.5M	Profinet, EtherCAT , Ethernet/IP (up to 100Mbs)	D	4	MS-MS 	CAT5E TYPE B, PVC, 22AWG, GREEN 	Yes
TAD14841111-001	M12D4-MS-MR-PVC TYPE B-0.5M				MS-MR 		

chanhvinh.com

M8/M12 CONNECTOR SYSTEM

PRODUCT OFFERINGS - M12 ETHERNET D-CODE 4-POS CABLE ASSEMBLIES SINGLE ENDED TYPE B PVC RED

Part Number	Part Description	Application	Code	POS	Type	Cable Material	Shielded
TAD14141311-001	M12D4-MS-PVC TYPE B RED-0.5M	SERCOS-III (up to 100Mbs)	D	4	Male Straight 	CAT5E TYPE B, PVC, 22AWG, RED 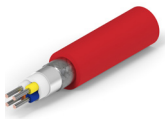 	Yes
TAD14241311-001	M12D4-MR-PVC TYPE B RED-0.5M				Male R/A 		

PRODUCT OFFERINGS - M12 ETHERNET D-CODE 4-POS CABLE ASSEMBLIES DOUBLE ENDED TYPE B PVC RED

Part Number	Part Description	Application	Code	POS	Type	Cable Material	Shielded
TAD14741311-001	M12D4-MS-MS-PVC TYPE B RED-0.5M	SERCOS-III (up to 100Mbs)	D	4	MS-MS 	CAT5E TYPE B, PVC, 22AWG, RED 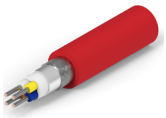 	Yes
TAD14841311-001	M12D4-MS-MR-PVC TYPE B RED-0.5M				MS-MR 		

00L	Cable Length
-001	0.5M
-002	1.0M
-020	2.0M
-040	4.0M
-060	6.0M
-080	8.0M
-007	10.0M
-150	15.0M
-200	20.0M
-250	25.0M
-300	30.0M

-XXX	Customized Cable Length
-XX0	XXM
-XX5	XX.5M

M8/M12 CONNECTOR SYSTEM

Application	Code	Pin Assignment			M12 D Code Male	RJ45 Plug	Shielding
Ethernet	D code	(For Profinet/EtherCAT PUR, PVC jacketed cables) **M12 D code TO RJ45**			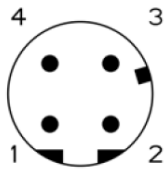	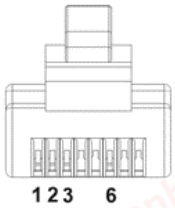	Option on metal nut
		Pin1 TD+	Yellow	Pin1			
		Pin3 TD-	Orange	Pin2			
		Pin2 RD+	White	Pin3			
		Pin4 RD-	Blue	Pin6			
		(For EtherNET/IP TPE jacketed cable) **M12 D code TO RJ45**					
		Pin1 TD+	White-Orange	Pin1			
		Pin3 TD-	Orange	Pin2			
		Pin2 RD+	White-Green	Pin3			
		Pin4 RD-	Green	Pin6			

M8/M12 CONNECTOR SYSTEM

PART NUMBER GUIDE FOR M12 D-CODE CORDSETS

T	A	D	S	B	X	W	Y	O	M	N	-XXX

T	TE Brand
A	M12 series
D	D code

S	Application Type
1	Shielding industrial ethernet Cate5e
2	Unshielding industrial ethernet Cate5e *only with TPE

B	Poles No.
4	4 Poles

X	Interface Type
1	Male straight
2	Male angled
5	Male straight to female straight
7	Male straight to male straight
8	Male straight to male angled

W	Wire Gauge
3	24 AWG (*for TPE)
4	22 AWG (*for PUR, PVC)

Y	Cable Jacket
1	PVC Moderate flexible
5	PUR high flex
A	TPE Extreme high flex

O	Cable Color
1	Green
2	Teal
3	Red

M	Over-Molding
0	Black TPU Over-molding (*for PUR and TPE)
1	Black PVC Over-molding for PVC

N	Other
1	Standard screw nut with nickel plated Stamping contact 30u" AU plated

-00L	Cable Length
-001	0.5M
-002	1.0M
-003	1.5M
-020	2.0M
-004	3.0M
-005	5.0M
-006	7.0M
-007	10.0M

-XXX	Customized Cable Length
-XX0	XX.0M
-XX5	XX.5M
-99X	(<1M) 0.XM
-993	0.3M
-155	15.5M

FOR ETHERNET/IP (TPE CABLE)

Wiring Diagram-M12 Cable Cordset Shielded

From Pin	4 Poles	To Pin
1	White-Orange	1
2	White-Green	2
3	Orange	3
4	Green	4
Shielded	Metal Nut	Shielded

Wiring Diagram-M12 Cable Cordset Unshielded

From Pin	4 Poles	To Pin
1	White-Orange	1
2	White-Green	2
3	Orange	3
4	Green	4

FOR PROFINET/ETHERCAT (PUR, PVC CABLE)

Wiring Diagram-M12 Cable Cordset Shielded

From Pin	4 Poles	To Pin
1	Yellow	1
2	White	2
3	Orange	3
4	Blue	4
Shielded	Metal Nut	Shielded

chanhvinh.com

M8/M12 CONNECTOR SYSTEM

Application	Code	Pin Assignment	Male	Female	Shielding
Ethernet	D code	(For Profinet/EtherCAT) PIN1 TD+ YELLOW PIN3 TD- ORANGE PIN2 RD+ WHITE PIN4 RD- BLUE (For EtherNET/IP) PIN1 TD+ WHITE-ORANGE PIN3 TD- ORANGE PIN2 RD+ WHITE-GREEN PIN4 RD- GREEN	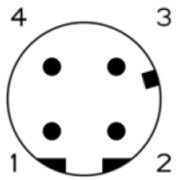	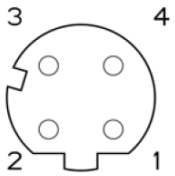	Option on metal nut

chanhvinh.com

PART NUMBER GUIDE FOR M12 D-CODE MALE TO RJ45 CORDSETS

T	C	D	S	B	X	W	Y	O	M	N	-XXX

T	TE Brand
C	M12 to RJ45
D	D code

S	Application Type
1	Shielding Industrial Ethernet Cate5e
2	Unshielding Industrial Ethernet Cate5e *only with TPE

B	Poles No.
4	4 Poles

X	Interface Type
7	Male straight to RJ45 male straight

W	Wire Gauge
3	24 AWG (*for TPE)
4	22 AWG (*for PUR, PVC)

Y	Cable Jacket
1	PVC Moderate flexible
5	PUR High flex
A	TPE Extreme high flex

O	Cable Color
1	Green (*PUR and PVC)
2	Teal (*TPE)

M	Over-Molding
0	Black TPU Over-molding (*for PUR and TPE)
1	Black PVC Over-molding (*for PVC)

N	Other
1	Standard screw nut with nickel plated Stamping contact 30u" AU plated

-00L	Cable Length
-001	0.5M
-002	1.0M
-003	1.5M
-020	2.0M
-004	3.0M
-005	5.0M
-006	7.0M
-007	10.0M

-XXX	Customized Cable Length
-XX0	XX.0M
-XX5	XX.5M
-99X	(<1M) 0.XM
-993	0.3M
-155	15.5M

FOR ETHERNET/IP (TPE CABLE)

Wiring Diagram-M12 Cable Cordset Shielded

From D code Pin	4 Poles	To RJ45 Pin
1	White-Orange	1
2	White-Green	2
3	Orange	3
4	Green	4
Shielded	Metal Nut	Shielded

FOR PROFINET/ETHERCAT (PUR, PVC CABLE)

Wiring Diagram-M12 Cable Cordset Shielded

From D Code Pin	4 Poles	To RJ45 Pin
1	Yellow	1
2	White	2
3	Orange	3
4	Blue	4
Shielded	Metal Nut	Shielded

M8/M12 CONNECTOR SYSTEM

Industrial Networks and Application Use: M12 Key Interfaces

Application	Code	Pin Assignment	Male	Female	Shielding
Ethernet	D code	(For **Profinet/EtherCAT**): PIN 1 TD+ YELLOW PIN 3 TD- ORANGE PIN 2 RD+ WHITE PIN 4 RD- BLUE (For **Ethernet/IP**): PIN 1 TD+ WHITE-ORANGE PIN 3 TD- ORANGE PIN 2 RD+ WHITE-GREEN PIN 4 RD- GREEN	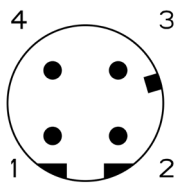	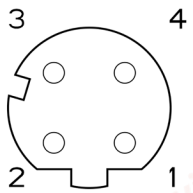	Optional on metal nut
CC-link	A code	PIN 1 DRAIN BARE PIN 2 DS WHITE PIN 3 DG YELLOW PIN 4 DA BLUE	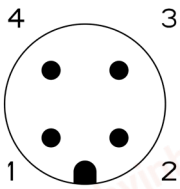	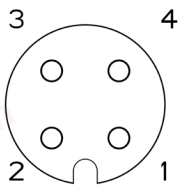	On metal nut
Profibus	B code	PIN 2 DATA CORE A GREEN PIN 4 DATA CORE B RED	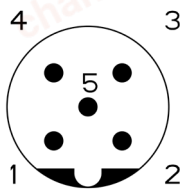	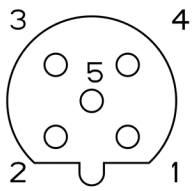	On metal nut
Devicenet/ Canopen	A code	PIN 4 CAN_H WHITE PIN 5 CAN_L BLUE PIN 1 DRAIN BARE PIN 3 V- BLACK PIN 2 V+ RED	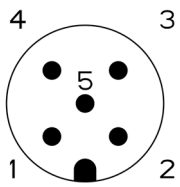	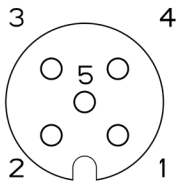	On metal nut

chanhvinh.com

M12 X-CODE CORDSETS AND M12 X-CODE TO RJ45 CORDSETS

X-code connection technology is experiencing a significant increase in interest as more companies look for higher network speeds and more reliable, high-quality data transmissions.

The 8-pin M12 X-code design is the most recent evolution in the Industrial environment which can handle 10 Gbit/s Ethernet transmission speeds.

Category 6A (Cat6A) cables usually consist of standardized twisted pair cables for Ethernet and other network layers. These can handle data rates up to 10 Gbit/s. In order to withstand these high speeds and data output, Cat6A cables have significant shielding and cable twist requirements.

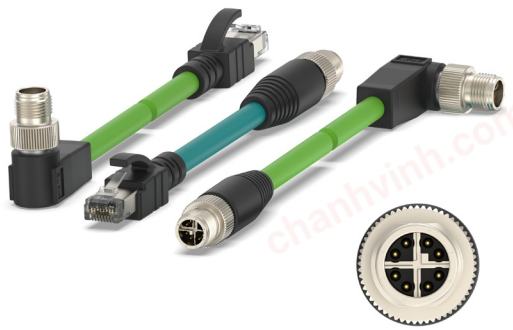

The M12 X-code connector is specially developed for these requirements, whereby the channel pairs are separated and the degree of shielding in the connector itself has been increased. The new M12 X-coded cordsets, which are UL certified and have an IP67 rating for dust-tight and waterproof applications ensure efficient, high-quality and reliable connectivity and high integrity signal transmission. TE M12 overmolded X-code cordsets series contain male straight and right angle versions that transmit data rates up to 10 Gbit/s according to IEC 61076-2-109. Our Cat6A cable jackets vary between PVC, PUR and TPE which offer a unique solution toward satisfying the stringent needs of motion systems supporting both flexing and stationary industrial high speed Ethernet requirements.

TE's portfolio is further complemented with overmolded M12 X-code to RJ45 cable assemblies which are key components to an overal Industrial Ethernet application and designed for connection within control cabinets, machinery and outdoor applications. This further simplifies the concurrent use of both connector types (M12 & RJ45) within a single system.

FEATURES

- Enclosure rating of IP67
- 360 degrees shielding
- PUR cables suitable for drag chain application (up to 3 million cycles)
- TPE cables suitable for drag chain (up to 1 million cycles) and torsion applications (up to 3 million cycles)
- Oil resistant for PUR/TPE cable
- UV resistant for PUR/TPE/PVC cable
- **Flame retardant:**
  - CM for PVC/TPE cable
  - FT2 for PUR cable

BENEFITS

- Unit remains protected & fully operational in most industrial applications
- Secured signal connections and data trasnmission
- Ensure the application of cable assembly in flexible installation environment
- Ensure the application of cable assembly in Torsion application environment
- Oil-resistant for in oil industrial applications
- Application of UV-resistant environment

chanhvinh.com

M8/M12 CONNECTOR SYSTEM

APPLICATIONS

- Vision systems and cameras
- Industrial communications
- Industrial machinery
- Robotics
- Material handling
- Test equipment
- I/O connectivity
- Data aqcuisition

MECHANICAL

- **Durability:** 100 cycles
- **Degree of protection:**
  - IP67 for M12 X-code (mated)
  - IP20 for RJ45 side
- **Mating and un-mating force:**
  - **Insertion:** 30N max.
  - **Withdraw:** 30N max.
- Sinusoidal vibration per IEC60512, test 6d
- Mechanical shock per IEC60512, test 6c

ELECTRICAL

- **Rated voltage:** 30V
- **Rated current:** 0.5A
- **Initial value contact resistance:** 15mΩ Max.
- **Rated impulse voltage:** 0.5KV”

MATERIALS

- Nylon for HSG
- TPU for TPE/PUR cable overmolding
- PVC for PVC cable overmolding
- Zinc alloy for metal nuts and shielded shell, Nickel plated for metal nut,
  Tin plated for shielded shell
- Copper alloy for terminals, 30um gold plated
- **Temperature rating:**
  - M12 X-code connector: -25...~85°C
  - RJ45 connector: -25...~60°C
  - **Cable:** -25...~80°C (MOVED)
    -40...~80°C (FIXED)

STANDARDS

- UL1863
- UL444 for PVC/TPE cable
- UL758 for PUR cable

SPECIFICATIONS

- IEC 61076-2-109 for M12 X-code
- IEC60603-7 for RJ45

M8/M12 CONNECTOR SYSTEM

M12 X-CODE SINGLE AND DOUBLE END CORDSETS - PRODUCT CODE

T	A	X	S	B	X	W	Y	O	M	N	-XXX

T	TE Brand
A	M12 series
X	X-code

S	Application Type
3	Shielding Industrial Ethernet Cate 6A

B	Poles No.
8	8 Poles

X	Interface Type
1	Male straight
2	Male angled
7	Male straight to male straight
8	Male straight to male angled
B	Male angled to male angled

W	Wire Gauge
2	26 AWG

Y	Cable Jacket
1	PVC Moderate flexible
5	PUR High flex
A	TPE Extreme high flex

O	Cable Color
1	Green (for PVC & PUR)
2	Teal (only for TPE)

M	Over-Molding
0	Black TPU Over-molding for TPE/PUR cable
1	Black PVC Over-molding for PVC cable

N	Other
2	Zinc alloy screw nut with nickel plated Maching terinal 30u" AU plated

-00L	Cable Length
-001	0.5M
-002	1.0M
-003	1.5M
-020	2.0M
-004	3.0M
-005	5.0M
-006	7.0M
-007	10.0M
-150	15.0M
-XXX	**Customized Cable Length**
-XX0	XX.0M
-XX5	XX.5M
-99X	(<1M) 0.XM
-993	0.3M
-155	15.5M

M12 X-CODE CORDSET - WIRING SCHEMA

Wiring Diagram - M12 PUR/TPE Cordset Shielded, Double Ended

From Pin	8 Poles	To Pin
1	White/Orange	1
2	Orange	2
3	White/Green	3
4	Green	4
5	White/Brown	5
6	Brown	6
7	White/Blue	7
8	Blue	8
Shielded	Metal nut	Shielded

Wiring Diagram - M12 PVC Cordset Shielded, Double Ended

From Pin	8 Poles	To Pin
1	White	1
2	Orange	2
3	White	3
4	Green	4
5	White	5
6	Brown	6
7	White	7
8	Blue	8
Shielded	Metal Nut	Shielded

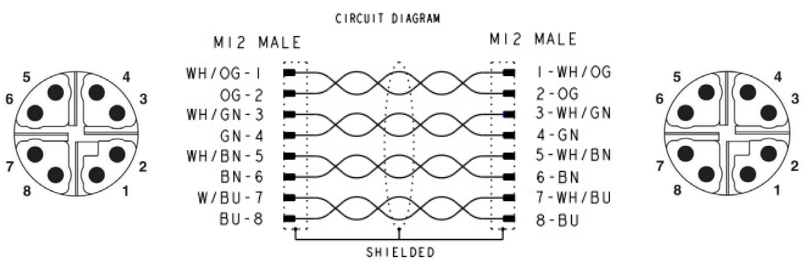

M8/M12 CONNECTOR SYSTEM

M12 X-CODE TO RJ45 CORDSETS - PRODUCT CODE

T	C	X	S	B	X	W	Y	O	M	N	-XXX

T	TE Brand
C	M12 TO RJ45
X	X-code

S	Application Type
3	Shielding industrial ethernet Cate 6A

B	Poles No.
8	8 Poles

X	Interface Type
7	Male straight to RJ45 Male straight
8	Male angled TO RJ45 Male straight

W	Wire Gauge
2	26 AWG

Y	Cable Jacket
1	PVC Moderate flexible
5	PUR High flex
A	TPE Extreme high flex

O	Cable Color
1	Green (for PVC & PUR)
2	Teal (only for TPE)

M	Over-Molding
0	Black TPU Over-molding for TPE/PUR cable
1	Black PVC Over-molding for PVC cable

N	Other
2	Zinc alloy screw nut with nickel plated Maching terinal 30u" AU plated

-00L	Cable Length
-001	0.5M
-002	1.0M
-003	1.5M
-020	2.0M
-004	3.0M
-005	5.0M
-006	7.0M
-007	10.0M
-150	15.0M
-XXX	**Customized Cable Length**
-XX0	XX.0M
-XX5	XX.5M
-99X	(<1M) 0.XM
-993	0.3M
-155	15.5M

M8/M12 CONNECTOR SYSTEM

M12 X-CODE MALE TO RJ45 MALE CORDSETS - WIRING SCHEMA FOR TPE & PUR

Wiring Diagram - M12 PUR/TPE Cordset
Shielded, Double Ended

From X-code Pin 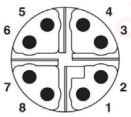	8 Poles	To RJ45 Pin 
1	White/Orange	1
2	Orange	2
3	White/Green	3
4	Green	4
5	White/Brown	5
6	Brown	6
7	White/Blue	7
8	Blue	8
Shielded	Metal nut	Shielded

M12 X-CODE MALE TO RJ45 MALE CORDSET - WIRING SCHEMA FOR PVC

Wiring Diagram - M12 PVC Cordset
Shielded, Double Ended

From X-code Pin 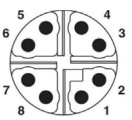	8 Poles	To RJ45 Pin 
1	White	1
2	Orange	2
3	White	3
4	Green	6
5	White	7
6	Brown	8
7	White	5
8	Blue	4
Shielded	Metal Nut	Shielded

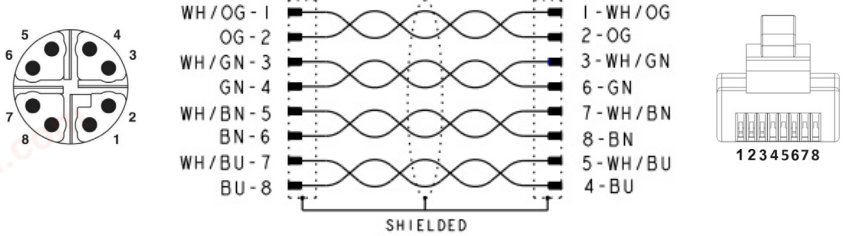

chanhvinh.com

M8/M12 CONNECTOR SYSTEM

M12 X-CODE 8POS SINGLE & DOUBLE ENDED TPE CABLE ASSEMBLIES

Part Number	Part Description	Application	Code	POS	Type	Cable Material	Shielded
TAX3812A202-002	M12X-MS-8CON-TPE-1.0SH	Ethernet up to 10 Gb/s data transmission	X-code	8	Male Straight (MS) 	TPE  	Yes
TAX3822A202-002	M12X-MR-8CON-TPE-1.0SH				Male Right Angle (MR) 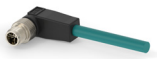		
TAX3872A202-002	M12X-8MS-1.0SH-M12X-8MS-TPE				MS - MS 		
TAX38B2A202-002	M12X-8MR-1.0SH-M12X-8MR-TPE				MR - MR 		
TAX3882A202-002	M12X-8MS-1.0SH-M12X-8MR-TPE				MS - MR 		
TCX3882A202-002	M12X-8MR-1.0SH-RJ45-8MS-TPE				MR - Straight RJ45 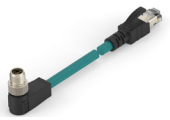		
TCX3872A202-002	M12X-8MS-1.0SH-RJ45-8MS-TPE				MS - Straight RJ45 		

chanhvinh.com

M12 X-CODE 8POS SINGLE & DOUBLE ENDED PUR & PVC CABLE ASSEMBLIES

Part Number	Part Description	Application	Code	POS	Type	Cable Material	Shielded
TAX38125102-002	M12X-MS-8CON-PUR-1.0SH	Ethernet up to 10 Gb/s data transmission	X-code	8	Male Straight (MS) 	PUR	Yes
TAX38121112-002	M12X-MS-8CON-PVC-1.0SH					PVC	
TAX38225102-002	M12X-MR-8CON-PUR-1.0SH				Male Right Angle (MR) 	PUR	
TAX38221112-002	M12X-MR-8CON-PVC-1.0SH					PVC	
TAX38725102-002	M12X-8MS-1.0SH-M12X-8MS-PUR				MS - MS 	PUR	
TAX38721112-002	M12X-8MS-1.0SH-M12X-8MS-PVC					PVC	
TAX38825102-002	M12X-8MS-1.0SH-M12X-8MR-PUR				MS - MS 	PUR	
TAX38821112-002	M12X-8MS-1.0SH-M12X-8MR-PVC					PVC	
TCX38825102-002	M12X-8MR-1.0SH-RJ45-8MS-PUR				MR - MS 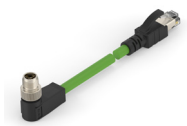	PUR	
TCX38821112-002	M12X-8MR-1.0SH-RJ45-8MS-PVC					PVC	
TCX38725102-002	M12X-8MS-1.0SH-RJ45-8MS-PUR				MS - Straight RJ45 	PUR	
TCX38721112-002	M12X-8MS-1.0SH-RJ45-8MS-PVC					PVC	
TAX38B25102-002	M12X-8MR-1.0SH-M12X-8MR-PUR				MR - MR 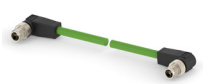	PUR	
TAX38B21112-002	M12X-8MR-1.0SH-M12X-8MR-PVC						

CABLE MATERIAL

PUR	PVC
	

chanhvinh.com

M12 L-CODE CABLE ASSEMBLY

M12 Power L-code connectors are an extension of the current M12 IEC standard and have been selected by PROFIBUS and PROFINET International as the standard for 24-volt power supply systems used in PROFINET devices. An extension of TE's M12 product portfolio, M12 L-code cable assemblies handle up to 16A per pin – the highest in TE's M12 family – delivering four times the power of standard M12 connectors while providing reliable and efficient power supply.



M12 Power L-coded connectors take up to 40% less space and almost 80% more power than 7/8" connectors traditionally used for high-power connections. The M12 power cable assemblies are available in both male and female connectors and suitable for every purpose with its conductor size from 1.5 mm^2 up to 2.5 mm^2 allowing for a more compact build of a high-power solutions for automation devices.

TE's new M12 Power L-code connectors are IP67 rated, protected from dust and resist temporary submersion in water at depths of up to 1 meter for 30 minutes. The L-coding version is designed for DC power supplies with 63 V DC / 16 A, where a high current and low voltage is required making ideal for Fieldbus Ethernet I/O boxes, Ethernet systems, Network Devices, Motors and Drives and Valve applications. The power cable assemblies are available through TE's global distribution network, which provides customers with short lead-times and fast responses for technical support.

KEY FEATURES

- IEnclosure rating of IP67
- 360 degrees shielding for reliable EMC protection and robustness
- Preventing mismatching connectors with different voltages
- PROFINET-conforming color scheme with L-coding versions
- Different cable materials PUR or PVC in shielded and non-shielded versions
- Custom specifications and cable lengths are available
- Depending on the material, the assemblies withstand up to 4 million flexes, machine oils, abrasion and UV radiation
- The new assemblies are available with several standard cable length options from 0.5m through to 20m

BENEFITS

- Unit remains protected and fully operational in most industrial applications
- Secured signal connections and data transmission
- Protection against mismatching with coded pin connector patterns
- PNO approved for immediate implementation into PROFINET standard and embracing miniaturization of distribution boxes
- One stop shop solution with broad product portfolio with cable jacket colors and material options
- Highly configurable with numerous connector variations, standard cable lengths
  up to 20mtrs and wire sizes

chanhvinh.com

M8/M12 CONNECTOR SYSTEM

APPLICATIONS

- Industrial communications
- Industrial machinery
- Robotics
- Material handling
- Industrial control and factory automation
- Test equipment
- I/O connectivity
- Sensor and actuators

ELECTRICAL

- 63V DC/AC
- 12A (16AWG)
- 16A (14AWG)
- Initial value contact resistance: 5mΩ Max.
- Rated impulse voltage 1.5KV

MECHANICAL

- Durability: 100 cycles
- Degree of protection: IP67
- Mating and un-mating force:
  - Insertion: 30N max. for 4P,45N Max. for 5P
  - Withdraw: 30N max. for 4P,45N Max. for 5P
- Sinusoidal vibration per IEC60512, Test 6d
- Mechanical shock per EIA364-27

STANDARDS

- UL 2237
- AWM style cables
- Electrical Standard 61076-2-111

MATERIALS

- Nylon for HSG
- TPU for overmolding
- Copper alloy for metal nuts, Nickel plated
  Cable jacket materials: PVC and PUR
- Cable information:
  - Temperature rating:
    - Power cable AWM2464 4C AWG14 (2.5mm²)
      PVC black
      Operating temperature -40°C to +80°C (fixed)
      -20°C to +80°C (flexible)
    - Power cable AWM20233 4C AWG16 (1.5mm²)
      PUR black drag chain
      Operating temperature -50°C to +80°C (fixed)
      -30°C to +80°C (flexible)
    - Power cable AWM2464 5C AWG14 (2.5mm²)
      PVC Gray
      Operating temperature -40°C to +80°C (fixed)
      -20°C to +80°C (flexible)
    - Power cable AWM20233 5C AWG14 (2.5mm²)
      PUR Gray drag chain
      Operating temperature -40°C to +80°C (fixed)
      -20°C to +80°C (flexible)
    - Power cable AWM20233 5C AWG16 (1.5mm²)
      PUR Gray drag chain
      Operating temperature -50°C to +80°C (fixed)
      -30°C to +80°C (flexible)
    - Power cable AWM20233 5C AWG14 (2.5mm²)
      PUR Gray Shielded Drag chain
      Operating temperature -50°C to +80°C (fixed)
      -30°C to +80°C (flexible)
  - PUR cables suitable for drag chain application
    (up to 4 million cycles)
  - Oil resistant
  - Flame retardant: VW-1/FT1
  - UV resistant
  - High Conductivity Copper alloy for terminals, Gold plated

Note: Color coding has been introduced by the "PROFIBUS and PROFINET International" (PI) user organization for better identification and to avoid confusion during installation:

- 4-pole versions have a black contact carrier and jacket
- 5-pole versions have a grey contact carrier and jacket

The contact carriers and the cables are color-coded so that end users don't confuse the 4-pin and 5-pin variants. The 4-pin L-coded M12 variants have a black contact carrier and cable. The 5-pin variants with an FE contact have a gray contact carrier and cable.

M8/M12 CONNECTOR SYSTEM

T	4	1	S	B	X	W	Y	L	M	N	-XXX

T	TE Brand
4	Circular Connector
1	M12

S	Shielding
5	Unshielded
6	Shielded

B	Forms
1	Single Sided
2	Double Sided

X	Interface Type
1	Male Straight
2	Male Angled
3	Female Straight
4	Female Angled
5	Male Straight to Female Straight
6	Male Straight to Female Angled
A	Male Angled to Female Straight

W	Wire Gauge
9	14 AWG PVC
B	14 AWG PUR
C	16 AWG PUR

Y	Cable Grip
9	Black TPU

L	Code Type
L	L Code

M	Jacket Color
1	Black
2	Grey

N	Pole Numbers
4	4 Poles
5	5 Poles

-00L	Cable Length
-001	0.5M
-002	1.0M
-003	1.5M
-020	2.0M
-004	3.0M
-005	5.0M
-006	7.0M
-007	10.0M
-200	20.0M
-XXX	**Customized Cable Length**
-XX0	XX.0M
-XX5	XX.5M
-99X	(<1M)0.XM

Following PI Guidelines, the available configurations are as below table:

Wire Gauge	Positions	Amp/V	Cable Materials	Contact Carrier
AWG14 (2.5mm²)	4	16A/63V	PVC black	Black
AWG16 (1.5mm²)	4	12A/63V	PUR black drag	Black
AWG14 (2.5mm²)	5 (4+FE)	16A/63V	PVC gray	Gray
AWG14 (2.5mm²)	5 (4+FE)	16A/63V	PUR gray drag	Gray
AWG16 (1.5mm²)	5 (4+FE)	12A/63V	PUR gray drag	Gray
AWG14 (2.5mm²)	5 (4+FE)	16A/63V	PUR gray Shield drag	Gray

Note: Color coding has been introduced by the "PROFIBUS and PROFINET International" (PI) user organization for better identification and to avoid confusion during installation:

- 4-pole versions have a black contact carrier and jacket
- 5-pole versions have a grey contact carrier and jacket

The contact carriers and the cables are color-coded so that end users don't confuse the 4-pin and 5-pin variants. The 4-pin L-coded M12 variants have a black contact carrier and cable. The 5-pin variants with an FE contact have a gray contact carrier and cable.

M8/M12 CONNECTOR SYSTEM

WIRING SCHEMA UNSHIELDED 4P

Wiring Diagram: M12 L-code Cable Single Ended

From Pin	4 Poles	To Pin
1	Brown	-
2	White	-
3	Blue	-
4	Black	-
Shielded	Metal Nut	-

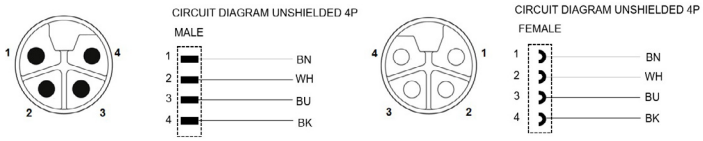

Wiring Diagram: M12 L-code Cable Double Ended

From Pin	4 Poles	To Pin
1	Brown	1
2	White	2
3	Blue	3
4	Black	4

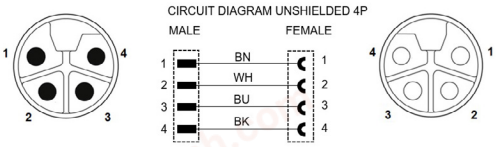

Application	Code	Pin Assignment	Male	Female	Shielding
Power	L-code	PIN1 Brown PIN2 White PIN3 Blue PIN4 Black	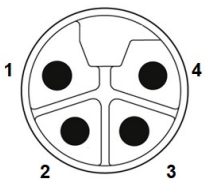	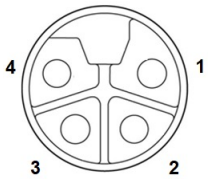	Option on metal nut

M8/M12 CONNECTOR SYSTEM

WIRING SCHEMA UNSHIELDED 5P

Wiring Diagram: M12 L-code Cable Single Ended

From Pin	5 Poles	To Pin
1	Brown	-
2	White	-
3	Blue	-
4	Black	-
FE	Gray	-

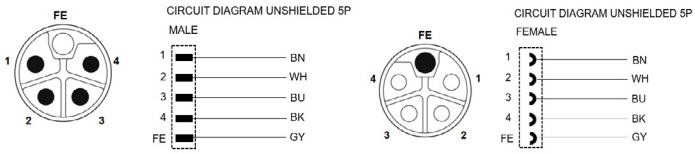

Wiring Diagram: M12 L-code Cable Double Ended

From Pin	5 Poles	To Pin
1	Brown	1
2	White	2
3	Blue	3
4	Black	4
FE	Gray	FE

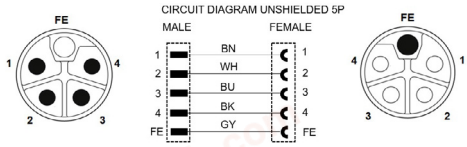

Application	Code	Pin Assignment	Male	Female	Shielding
Power	L-code	PIN1 Brown PIN2 White PIN3 Blue PIN4 Black FE Gray	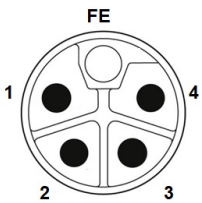	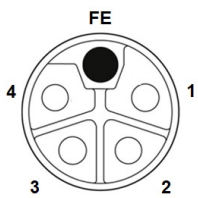	N/A

M8/M12 CONNECTOR SYSTEM

WIRING SCHEMA SHIELDED 5P

Wiring Diagram: M12 L-code Cable Single Ended

Side 1	5 Poles	Side 2
1	Brown	-
2	White	-
3	Blue	-
4	Black	-
FE	Gray	-
Shielded	Metal Nut	-

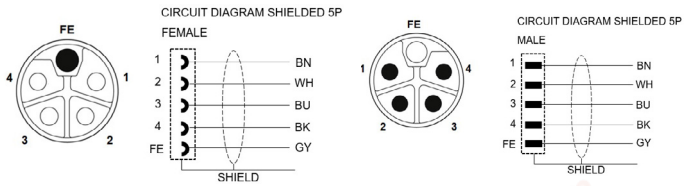

Wiring Diagram: M12 L-code Cable Double Ended

Side 1	5 Poles	Side 2
1	Brown	1
2	White	2
3	Blue	3
4	Black	4
FE	Gray	FE
Shielded	Metal Nut	Shielded

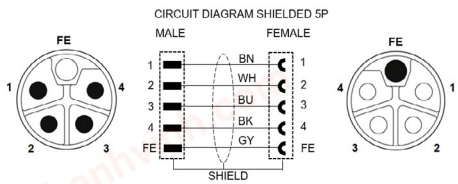

Application	Code	Pin Assignment	Male	Female	Shielding
Power	L code	PIN1 Brown PIN2 White PIN3 Blue PIN4 Black FE Gray	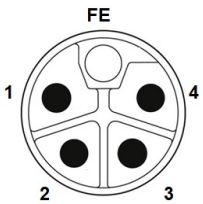	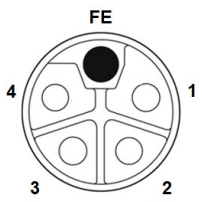	On metal nut

M8/M12 CONNECTOR SYSTEM

Part Number List

Part Number	Part Description	Code	POS	Type	Cable Material
T4151199L14-001	M12L-4MS-0.5-PVC 14AWG BK	L	4	Male Straight	PVC 14 AWG Black 
T4151299L14-001	M12L-4MR-0.5-PVC 14AWG BK			Male Right Angle	
T4151399L14-001	M12L-4FS-0.5-PVC 14AWG BK			Female Straight	
T4151499L14-001	M12L-4FR-0.5-PVC 14AWG BK			Female Right Angle	
T4152599L14-001	M12L-4MS-0.5-4FS-PVC 14AWG BK			Male Straight to Female Straight	
T4152699L14-001	M12L-4MS-0.5-4FR-PVC 14AWG BK			Male Straight to Female Right Angle	
T4152A99L14-001	M12L-4MR-0.5-4FS-PVC 14AWG BK			Male Right Angle to Female Straight	

Part Number	Part Description	Code	POS	Type	Cable Material
T41511C9L14-001	RPC-M12L-4MS-0.5-PUR 16AWG BK	L	4	Male Straight	PUR 16 AWG Black 
T41513C9L14-001	RPC-M12L-4FS-0.5-PUR 16AWG BK			Female Straight	
T41514C9L14-001	RPC-M12L-4FR-0.5-PUR 16AWG BK			Female Right Angle	
T41525C9L14-001	RPC-M12L-4MS-0.5-4FS-PUR 16AWG BK			Male Straight to Female Straight	
T41526C9L14-001	RPC-M12L-4MS-0.5-4FR-PUR 16AWG BK			Male Straight to Female Right Angle	
T4152AC9L14-001	RPC-M12L-4MR-0.5-4FS-PUR 16AWG BK			Male Right Angle to Female Straight	

Note: Cable lengths are available up to 20mtrs. For full scope of lengths please visit PN guide on page 3

M8/M12 CONNECTOR SYSTEM

Part Number List

Part Number	Part Description	Code	POS	Type	Cable Material
T4151199L25-001	RPC-M12L-5MS-0.5-PVC 14AWG GY	L	5(4+FE)	Male Straight	PVC 14 AWG Gray 
T4151399L25-001	RPC-M12L-5FS-0.5-PVC 14AWG GY			Female Straight	
T4151499L25-001	RPC-M12L-5FR-0.5-PVC 14AWG GY			Female Right Angle	
T4152599L25-001	RPC-M12L-5MS-0.5-5FS-PVC 14AWG GY			Male Straight to Female Straight	
T4152699L25-001	RPC-M12L-5MS-0.5-5FR-PVC 14AWG GY			Male Straight to Female Right Angle	
T4152A99L25-001	RPC-M12L-5MR-0.5-5FS-PVC 14AWG GY			Male Right Angle to Female Straight	

Part Number	Part Description	Code	POS	Type	Cable Material
T41511B9L25-001	RPC-M12L-5MS-0.5-PUR 14AWG GY	L	5(4+FE)	Male Straight	PUR 14 AWG Gray 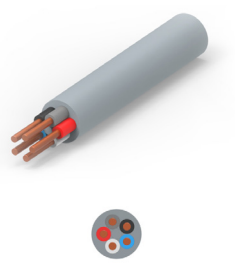
T41512B9L25-001	RPC-M12L-5MR-0.5-PUR 14AWG GY			Male Right Angle	
T41513B9L25-001	RPC-M12L-5FS-0.5-PUR 14AWG GY			Female Straight	
T41514B9L25-001	RPC-M12L-5FR-0.5-PUR 14AWG GY			Female Right Angle	
T41525B9L25-001	RPC-M12L-5MS-0.5-5FS-PUR 14AWG GY			Male Straight to Female Straight	
T41526B9L25-001	RPC-M12L-5MS-0.5-5FR-PUR 14AWG GY			Male Straight to Female Right Angle	
T4152AB9L25-001	RPC-M12L-5MR-0.5-5FS-PUR 14AWG GY			Male Right Angle to Female Straight	

M8/M12 CONNECTOR SYSTEM

Part Number List

Part Number	Part Description	Code	POS	Type	Cable Material
T41511C9L25-001	RPC-M12L-5MS-0.5-PUR 16AWG GY	L	5(4+FE)	Male Straight	PUR 16 AWG Gray 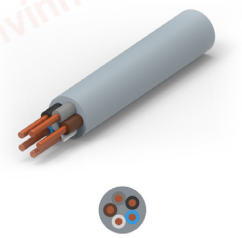
T41512C9L25-001	RPC-M12L-5MR-0.5-PUR 16AWG GY			Male Right Angle	
T41513C9L25-001	RPC-M12L-5FS-0.5-PUR 16AWG GY			Female Straight	
T41514C9L25-001	RPC-M12L-5FR-0.5-PUR 16AWG GY			Female Right Angle	
T41525C9L25-001	RPC-M12L-5MS-0.5-5FS-PUR 16AWG GY			Male Straight to Female Straight	
T41526C9L25-001	RPC-M12L-5MS-0.5-5FR-PUR 16AWG GY			Male Straight to Female Right Angle	
T4152AC9L25-001	RPC-M12L-5MR-0.5-5FS-PUR 16AWG GY			Male Right Angle to Female Straight	

Part Number	Part Description	Code	POS	Type	Cable Material
T41611B9L25-001	RPC-M12L-5MS-0.5-SH PUR 14AWG GY	L	5(4+FE)	Male Straight	PUR 14 AWG Shielded Gray 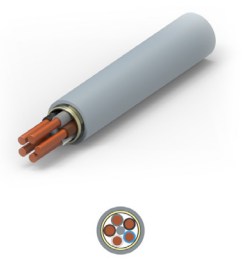
T41612B9L25-001	RPC-M12L-5MR-0.5-SH PUR 14AWG GY			Male Right Angle	
T41613B9L25-001	RPC-M12L-5FS-0.5-SH PUR 14AWG GY			Female Straight	
T41614B9L25-001	RPC-M12L-5FR-0.5-SH PUR 14AWG GY			Female Right Angle	
T41625B9L25-001	RPC-M12L-5MS-0.5-5FS-SH PUR 14AWG GY			Male Straight to Female Straight	
T41626B9L25-001	RPC-M12L-5MS-0.5-5FR-SH PUR 14AWG GY			Male Straight to Female Right Angle	
T4162AB9L25-001	RPC-M12L-5MR-0.5-5FS-SH PUR 14AWG GY			Male Right Angle to Female Straight	

chanhvinh.com

M8/M12 CONNECTOR SYSTEM

chanhvinh.com

te.com

© 2022 TE Connectivity. All Rights Reserved.

TE Connectivity, TE, TE connectivity (logo) and EVERY CONNECTION COUNTS are trademarks owned or licensed by the TE Connectivity Ltd. family of companies.

All other logos, products and/or company names referred to herein might be trademarks of their respective owners.

While TE has made every reasonable effort to ensure the accuracy of the information in this brochure, TE does not guarantee that it is error-free, nor does TE make any other representation, warranty or guarantee that the information is accurate, correct, reliable or current. TE reserves the right to make any changes to the information contained herein without prior notice. TE Connectivity assumes only those obligations set forth in the terms and conditions for this product and shall in no event be liable for any incidental, indirect, or consequential damages arising out of the sale, resale, use, or misapplication of the product. TE expressly disclaims any implied warranties with respect to the information contained herein, including, but not limited to, implied warranties of merchantability or fitness for a particular purpose. Dimensions, specifications and/or information contained herein are for reference purposes only and are subject to change without notice. Consult TE for the latest dimensions, specifications and/or information. Users of TE Connectivity products must make their own assessment as to whether the respective product is suitable for the respective desired application.

1-1773701-8 AK 01/22

chanhvinh.com