chanhvinh.com

MS5803-14BA Miniature 14 bar Module



RoHS

- **High resolution module, 0.2 mbar**
- **Fast conversion down to 1 ms**
- **Low power, 1 µA (standby < 0.15 µA)**
- **Integrated digital pressure sensor (24 bit ΔΣ ADC)**
- **Supply voltage 1.8 to 3.6 V**
- **Operating range: 0 to 14 bar, -40 to +85 °C**
- **I^2C and SPI interface (Mode 0,3)**
- **No external components (Internal oscillator)**
- **Excellent long term stability**
- **Hermetically sealable for outdoor devices**

DESCRIPTION

The MS5803-14BA is a new generation of high resolution pressure sensors with SPI and I2C bus interface. It is optimized for depth measurement systems with a water depth resolution of 1cm and below. The sensor module includes a high linear pressure sensor and an ultra low power 24 bit ΔΣ ADC with internal factory calibrated coefficients. It provides a precise digital 24 Bit pressure and temperature value and different operation modes that allow the user to optimize for conversion speed and current consumption. A high resolution temperature output allows the implementation of a depth measurement systems and thermometer function without any additional sensor. The MS5803-14BA can be interfaced to any microcontroller. The communication protocol is simple, without the need to programming internal registers in the device. The gel protection and antimagnetic stainless steel cap protects against 30 bar overpressure water resistant. This new sensor module generation is based on leading MEMS technology and latest benefits from the Intersema's proven experience and know-how in high volume manufacturing of pressure modules have been widely used for over a decade. This sensing principle employed leads to very low hysteresis and high stability of both pressure and temperature signal.

FEATURES

FIELD OF APPLICATION

- Mobile water depth measurements systems
- Diving computers
- Adventure or multi-mode watches

FUNCTIONAL BLOCK DIAGRAM

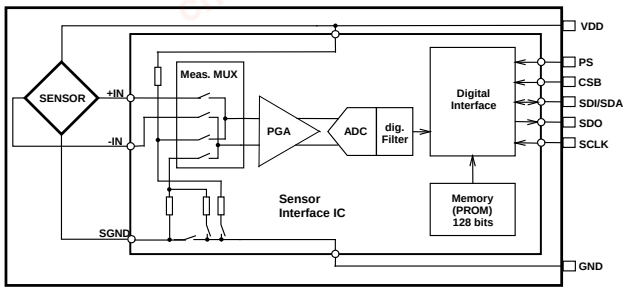

TECHNICAL DATA

Sensor Performances (V_{DD} = 3 V)				
Pressure	**Min**	**Typ**	**Max**	**Unit**
Range	0		14	bar
ADC		24		bit
Resolution (1)		1 / 0.6 / 0.4 / 0.3 / 0.2		mbar
Accuracy 0°C to +40°C, 0 to 6 bar (2)	-20		+20	mbar
Accuracy -40°C to + 85°C 0 to 6 bar (2)	-40		+40	mbar
Response time		0.5 / 1.1 / 2.1 / 4.1 / 8.22		ms
Long term stability		-20		mbar/yr
Temperature	**Min**	**Typ**	**Max**	**Unit**
Range	-40		+85	°C
Resolution		<0.01		°C
Accuracy	-0.8		+0.8	°C

Notes: (1) Oversampling Ratio: 256 / 512 / 1024 / 2048 / 4096
(2) With autozero at one pressure point

chanhvinh.com

MS5803-14BA Miniature 14 bar Module

PERFORMANCE SPECIFICATIONS

ABSOLUTE MAXIMUM RATINGS

Parameter	Symbol	Conditions	Min.	Typ.	Max	Unit
Supply voltage	V_{DD}		-0.3		+4.0	V
Storage temperature	T_S		-40		+125	°C
Overpressure	P_{max}	ISO 6425			30	bar
Maximum Soldering Temperature	T_{max}	40 sec max			250	°C
ESD rating		Human Body Model	-4		+4	kV
Latch up		JEDEC standard No 78	-100		+100	mA

ELECTRICAL CHARACTERISTICS

Parameter	Symbol	Conditions	Min.	Typ.	Max	Unit
Operating Supply voltage	V_{DD}		1.8	3.0	3.6	V
Operating Temperature	T		-40	+25	+85	°C
Supply current (1 sample per sec.)	I_{DD}	OSR 4096 2048 1024 512 256		12.5 6.3 3.2 1.7 0.9		µA
Peak supply current		during conversion		1.4		mA
Standby supply current		at 25°c		0.02	0.14	µA
VDD Capacitor		From VDD to GND	100			nF

ANALOG DIGITAL CONVERTER (ADC)

Parameter	Symbol	Conditions	Min.	Typ.	Max	Unit
Output Word				24		bit
Conversion time	t_c	OSR 4096 2048 1024 512 256	7.40 3.72 1.88 0.95 0.48	8.22 4.13 2.08 1.06 0.54	9.04 4.54 2.28 1.17 0.60	ms

chanhvinh.com

PERFORMANCE SPECIFICATIONS (CONTINUED)

PRESSURE OUTPUT CHARACTERISTICS (V_{DD} = 3 V, T = 25°C UNLESS OTHERWISE NOTED)

Parameter	Conditions		Min.	Typ.	Max	Unit
Operating Pressure Range	P_{range}	Full Accuracy	0		14	bar
Absolute Accuracy, Temperature range 0 … 40 °C	0 … 6 bar 0 … 10 bar 0 … 14 bar		-20 -60 -150		+20 +20 +20	mbar
Absolute Accuracy, Temperature range -40 … 85 °C	0 … 6 bar 0 … 10 bar 0 … 14 bar		-40 -120 -200		+40 +80 +100	mbar
Maximum error with supply voltage (1)	V_{DD} = 1.8 V … 3.6 V			+/-20		mbar
Long-term stability				-20		mbar/yr
Resolution RMS	OSR	4096 2048 1024 512 256		0.2 0.3 0.4 0.6 1.0		mbar

(1) With autozero at 3V point

TEMPERATURE OUTPUT CHARACTERISTICS (V_{DD} = 3 V, T = 25°C UNLESS OTHERWISE NOTED)

Parameter	Conditions		Min.	Typ.	Max	Unit
Absolute Accuracy	0 …10 bar -20..85°C -40..85°C		-0.8 -2.0 -4.0		+0.8 +2.0 +4.0	°C
Maximum error with supply voltage (1)	V_{DD} = 1.8 V … 3.6 V			+/-0.5		°C
Resolution RMS	OSR	4096 2048 1024 512 256		0.002 0.003 0.005 0.008 0.012		°C

(1) With autozero at 3V point

chanhvinh.com

PERFORMANCE SPECIFICATIONS (CONTINUED)

DIGITAL INPUTS (PS, CSB, DIN, SCLK, SDA, SCL)

Parameter	Symbol	Conditions	Min.	Typ.	Max	Unit
Serial data clock	SCLK	SPI protocol			20	MHz
Serial data clock	SCL	I2C protocol			400	kHz
Input high voltage	V_{IH}	Pins CSB	80% V_{DD}		100% V_{DD}	V
Input low voltage	V_{IL}		0% V_{DD}		20% V_{DD}	V
Input leakage current	$I_{leak25°C}$	at 25°c			0.15	µA
CS low to first SCLK rising	tCSL		21			ns
CS low from last SCLK falling	tCSH		21			ns

PRESSURE OUTPUTS (DOUT, SDA, SCL)

Parameter	Symbol	Conditions	Min.	Typ.	Max	Unit
Output high voltage	V_{OH}	I_{source} = 0.6 mA	80% V_{DD}		100% V_{DD}	V
Output low voltage	V_{OL}	I_{sink} = 0.6 mA	0% V_{DD}		20% V_{DD}	V
Load capacitance	C_{LOAD}			16		pF

chanhvinh.com

MS5803-14BA Miniature 14 bar Module

PERFORMANCE CHARACTERISTICS

PRESSURE ERROR VS PRESSURE AND TEMPERATURE

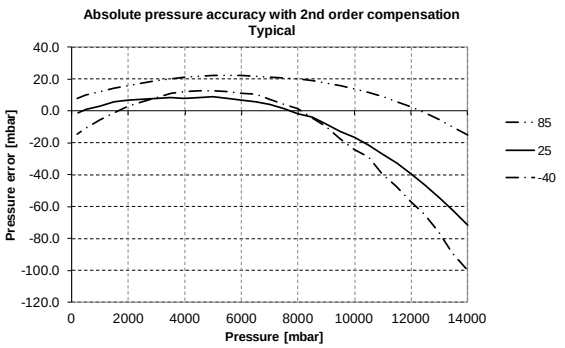

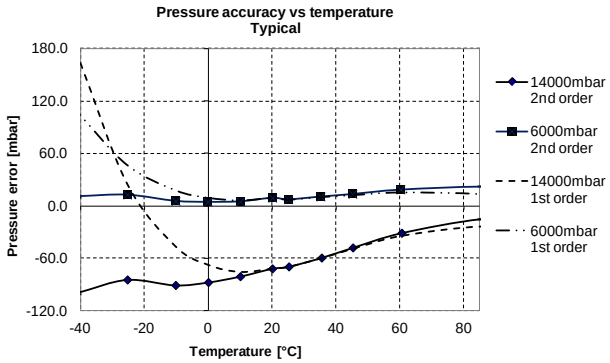

TEMPERATURE ERROR VS TEMPERATURE

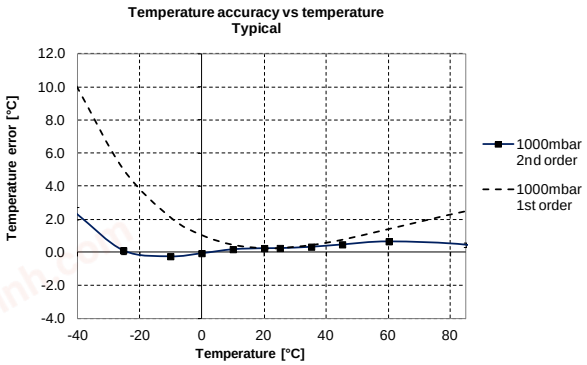

PRESSURE AND TEMPERATURE ERROR VS POWER SUPPLY

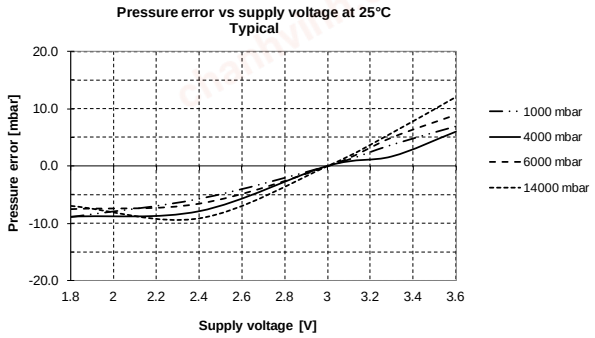

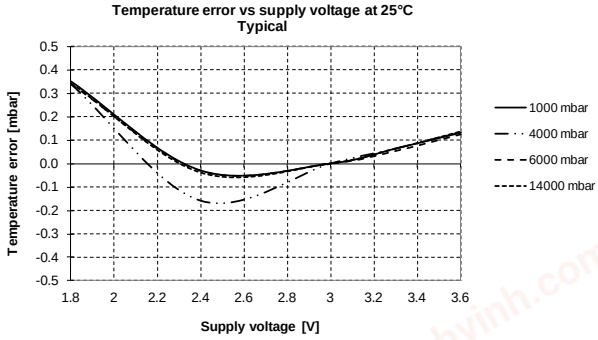

chanhvinh.com

FUNCTIONAL DESCRIPTION

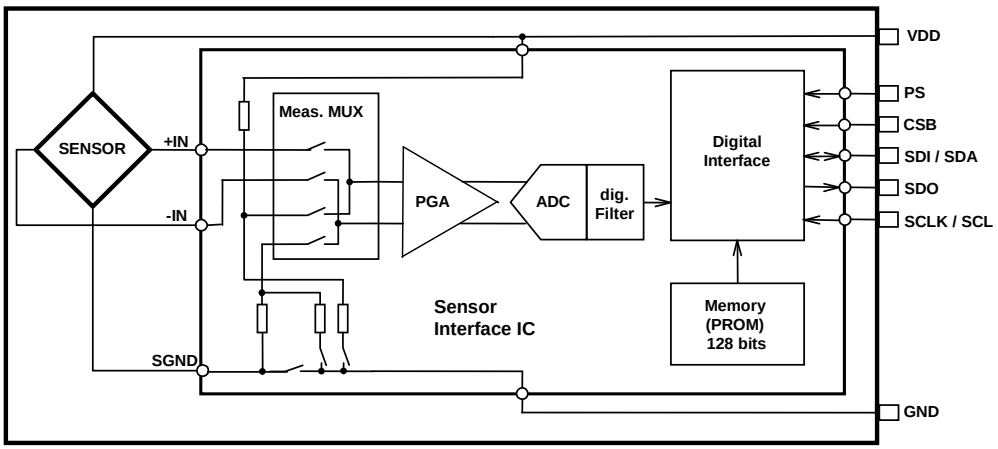

Figure 1: Block diagram of MS5803-14BA

GENERAL

The MS5803-14BA consists of a piezo-resistive sensor and a sensor interface IC. The main function of the MS5803-14BA is to convert the uncompensated analogue output voltage from the piezo-resistive pressure sensor to a 24-bit digital value, as well as providing a 24-bit digital value for the temperature of the sensor.

FACTORY CALIBRATION

Every module is individually factory calibrated at two temperatures and two pressures. As a result, 6 coefficients necessary to compensate for process variations and temperature variations are calculated and stored in the 128-bit PROM of each module. These bits (partitioned into 6 coefficients W1 to W6) must be read by the microcontroller software and used in the program converting D1 and D2 into compensated pressure and temperature values.
The 2 coefficients W0 and W7 are for factory configuration and CRC.

SERIAL INTERFACE

The MS5803-14BA has built in two types of serial interfaces: SPI and I^2C. Pulling the Protocol Select pin PS to low selects the SPI protocol, pulling PS to high activates the I^2C bus protocol.

Pin PS	Mode	Pins used
High	I^2C	SDA, SCL, CSB
Low	SPI	SDI, SDO, SCLK, CSB

SPI MODE

The external microcontroller clocks in the data through the input SCLK (Serial CLocK) and SDI (Serial Data In). In the SPI mode module can accept both mode 0 and mode 3 for the clock polarity and phase. The sensor responds on the output SDO (Serial Data Out). The pin CSB (Chip Select) is used to enable/disable the interface, so that other devices can talk on the same SPI bus. The CSB pin can be pulled high after the command is sent or after the end of the command execution (for example end of conversion). The best noise performance from the module is obtained when the SPI bus is quiet and without communication to other devices during the ADC conversion in progress.

chanhvinh.com

I²C MODE

The external microcontroller clocks in the data through the input SCLK (Serial CLocK) and SDA (Serial DAta). The sensor responds on the same pin SDA which is bidirectional for the I²C bus interface. So this interface type uses only 2 signal lines and does not require a chip select, which can be favourable to reduce board space. In I²C-Mode the complement of the pin CSB (Chip Select) represents the LSB of the I²C address. It is possible to use two sensors with two different addresses on the I²C bus. The pin CSB shall be connected to VDD or GND (do not leave unconnected!).

Pin CSB	Address (7 bits)
High	0x76 (1110110 b)
Low	0x77 (1110111 b)

COMMANDS

The MS5803-14BA has only five basic commands:

1. Reset
2. Read PROM (128 bit of calibration words)
3. D1 conversion
4. D2 conversion
5. Read ADC result (24 bit pressure / temperature)

Size of each command is 1 byte (8 bits) as described in the table below. After ADC read commands the device will return 24 bit result and after the PROM read 16bit result. The address of the PROM is embedded inside of the PROM read command using the a2, a1 and a0 bits.

	Command byte								hex value
Bit number	0	1	2	3	4	5	6	7	
Bit name	PRM	COV	-	Typ	Ad2/ Os2	Ad1/ Os1	Ad0/ Os0	Stop	
Command									
Reset	0	0	0	1	1	1	1	0	0x1E
Convert D1 (OSR=256)	0	1	0	0	0	0	0	0	0x40
Convert D1 (OSR=512)	0	1	0	0	0	0	1	0	0x42
Convert D1 (OSR=1024)	0	1	0	0	0	1	0	0	0x44
Convert D1 (OSR=2048)	0	1	0	0	0	1	1	0	0x46
Convert D1 (OSR=4096)	0	1	0	0	1	0	0	0	0x48
Convert D2 (OSR=256)	0	1	0	1	0	0	0	0	0x50
Convert D2 (OSR=512)	0	1	0	1	0	0	1	0	0x52
Convert D2 (OSR=1024)	0	1	0	1	0	1	0	0	0x54
Convert D2 (OSR=2048)	0	1	0	1	0	1	1	0	0x56
Convert D2 (OSR=4096)	0	1	0	1	1	0	0	0	0x58
ADC Read	0	0	0	0	0	0	0	0	0x00
PROM Read	1	0	1	0	Ad2	Ad1	Ad0	0	0xA0 to 0xAE

Figure 2: Command structure

chanhvinh.com

PRESSURE AND TEMPERATURE CALCULATION

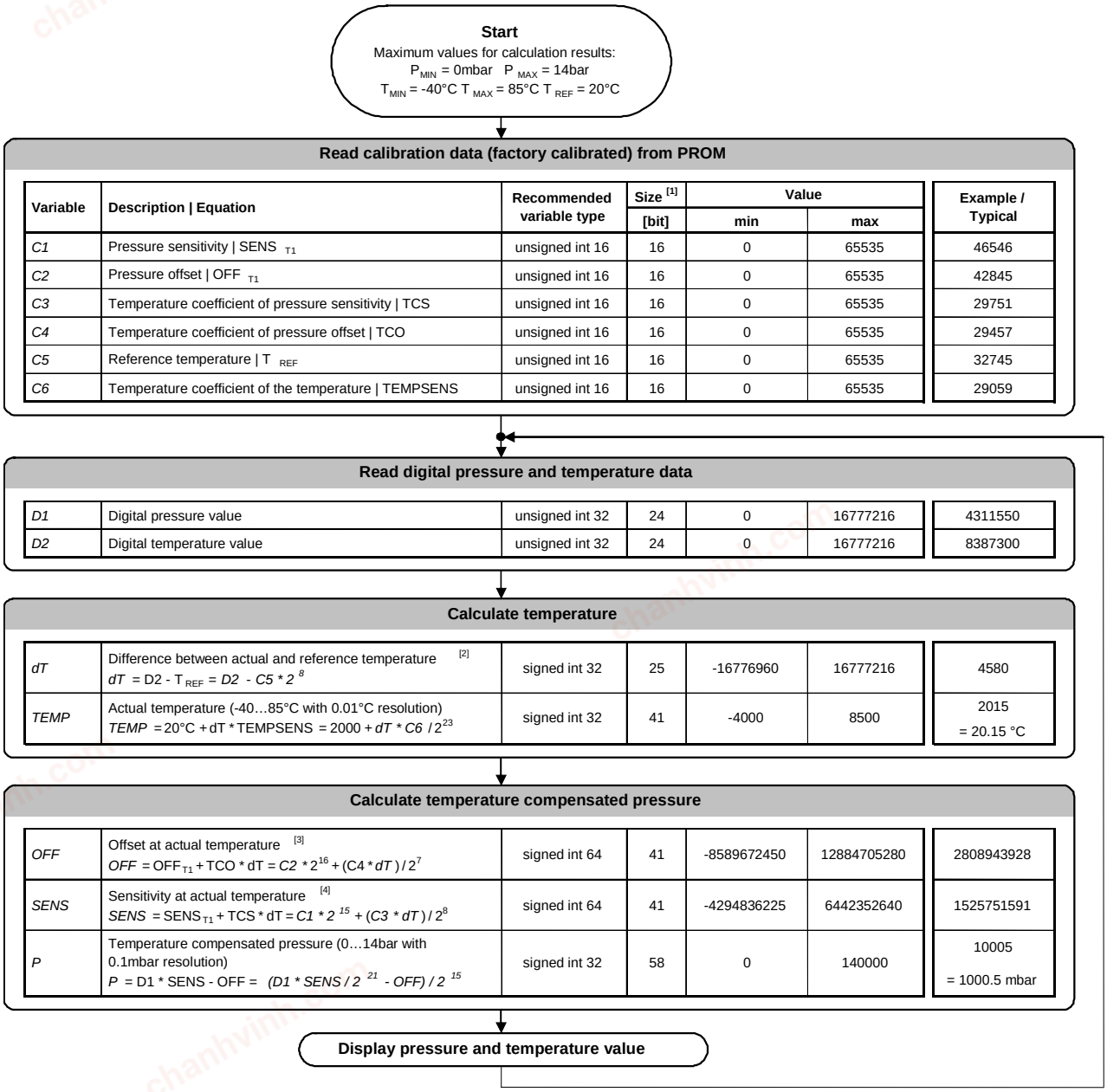

Read calibration data (factory calibrated) from PROM

Variable	Description | Equation	Recommended variable type	Size [1] [bit]	Value min	Value max	Example / Typical
C1	Pressure sensitivity | $SENS_{T1}$	unsigned int 16	16	0	65535	46546
C2	Pressure offset | OFF_{T1}	unsigned int 16	16	0	65535	42845
C3	Temperature coefficient of pressure sensitivity | TCS	unsigned int 16	16	0	65535	29751
C4	Temperature coefficient of pressure offset | TCO	unsigned int 16	16	0	65535	29457
C5	Reference temperature | T_{REF}	unsigned int 16	16	0	65535	32745
C6	Temperature coefficient of the temperature | TEMPSENS	unsigned int 16	16	0	65535	29059

Read digital pressure and temperature data

D1	Digital pressure value	unsigned int 32	24	0	16777216	4311550
D2	Digital temperature value	unsigned int 32	24	0	16777216	8387300

Calculate temperature

dT	Difference between actual and reference temperature [2] $dT = D2 - T_{REF} = D2 - C5 * 2^8$	signed int 32	25	-16776960	16777216	4580
TEMP	Actual temperature (-40…85°C with 0.01°C resolution) $TEMP = 20°C + dT * TEMPSENS = 2000 + dT * C6 / 2^{23}$	signed int 32	41	-4000	8500	2015 = 20.15 °C

Calculate temperature compensated pressure

OFF	Offset at actual temperature [3] $OFF = OFF_{T1} + TCO * dT = C2 * 2^{16} + (C4 * dT) / 2^7$	signed int 64	41	-8589672450	12884705280	2808943928
SENS	Sensitivity at actual temperature [4] $SENS = SENS_{T1} + TCS * dT = C1 * 2^{15} + (C3 * dT) / 2^8$	signed int 64	41	-4294836225	6442352640	1525751591
P	Temperature compensated pressure (0…14bar with 0.1mbar resolution) $P = D1 * SENS - OFF = (D1 * SENS / 2^{21} - OFF) / 2^{15}$	signed int 32	58	0	140000	10005 = 1000.5 mbar

Notes
[1] Maximal size of intermediate result during evaluation of variable
[2] min and max have to be defined
[3] min and max have to be defined
[4] min and max have to be defined

Figure 3: Flow chart for pressure and temperature reading and software compensation.

chanhvinh.com

SECOND ORDER TEMPERATURE COMPENSATION

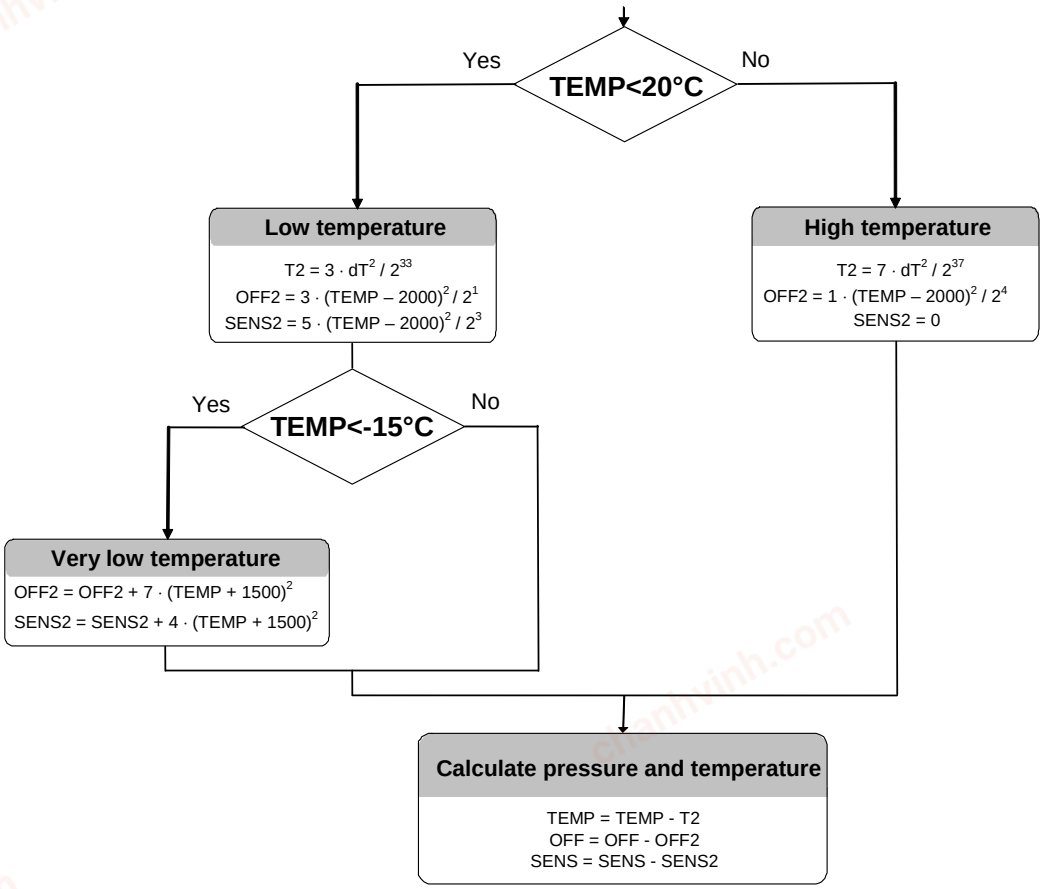

Figure 4: Flow chart for pressure and temperature to the optimum accuracy.

chanhvinh.com

SPI INTERFACE

RESET SEQUENCE

The Reset sequence shall be sent once after power-on to make sure that the calibration PROM gets loaded into the internal register. It can be also used to reset the device ROM from an unknown condition

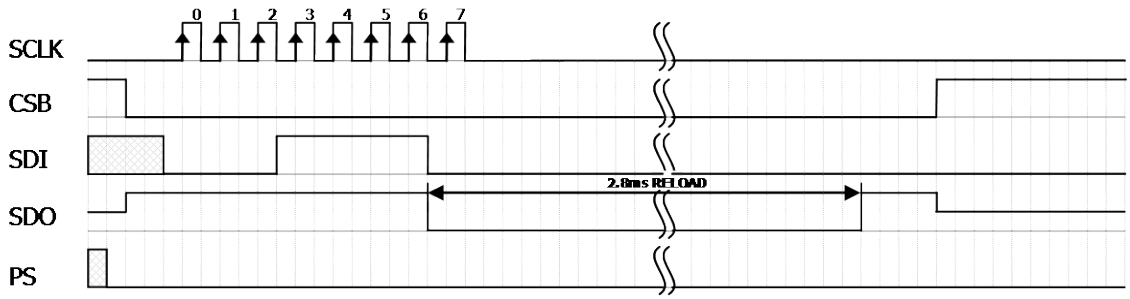

Figure 5: Reset command sequence SPI mode 0

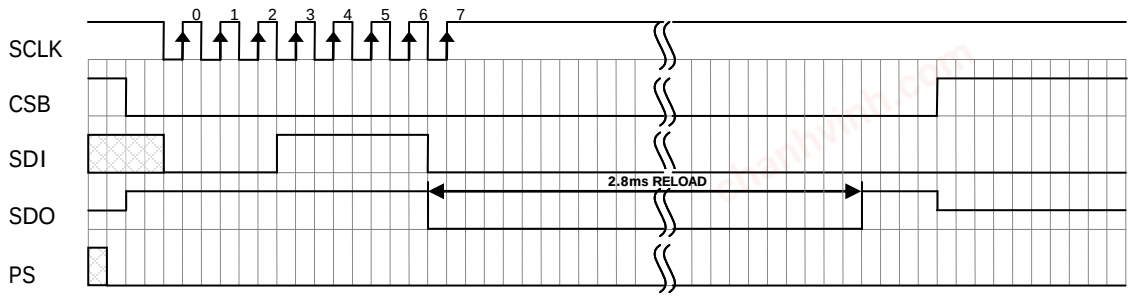

Figure 6: Reset command sequence SPI mode 3

chanhvinh.com

CONVERSION SEQUENCE

The conversion command is used to initiate uncompensated pressure (D1) or uncompensated temperature (D2) conversion. The chip select can be disabled during this time to communicate with other devices.
After the conversion, using ADC read command the result is clocked out with the MSB first. If the conversion is not executed before the ADC read command, or the ADC read command is repeated, it will give 0 as the output result. If the ADC read command is sent during conversion the result will be 0, the conversion will not stop and the final result will be wrong. Conversion sequence sent during the already started conversion process will yield incorrect result as well.

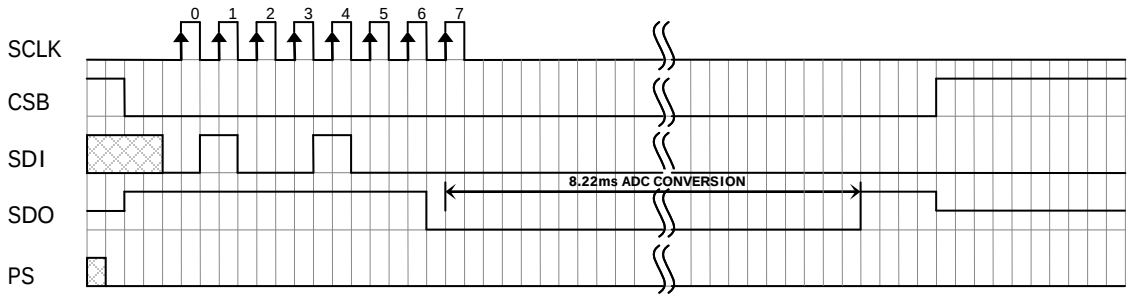

Figure 7: Conversion out sequence, Typ=d1, OSR = 4096

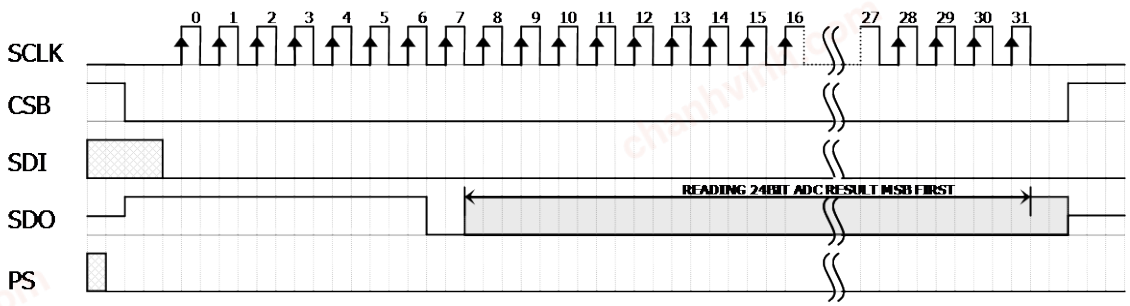

Figure 8: ADC Read sequence

PROM READ SEQUENCE

The read command for PROM shall be executed once after reset by the user to read the content of the calibration PROM and to calculate the calibration coefficients. There are in total 8 addresses resulting in a total memory of 128 bit. Address 0 contains factory data and the setup, addresses 1-6 calibration coefficients and address 7 contains the serial code and CRC. The command sequence is 8 bits long with a 16 bit result which is clocked with the MSB first.

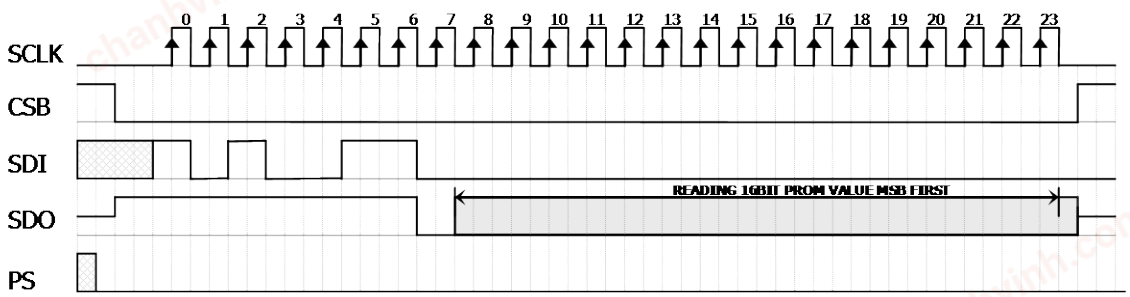

Figure 9: PROM Read sequence, address = 011 (Coefficient 3).

chanhvinh.com

I²C INTERFACE

COMMANDS

Each I²C communication message starts with the start condition and it is ended with the stop condition. The MS5803-14BA address is 111011Cx, where C is the complementary value of the pin CSB. Since the IC does not have a microcontroller inside, the commands for I²C and SPI are quite similar.

RESET SEQUENCE

The reset can be sent at any time except when the power on did not work it could be possible that the acknowledge blocks the SDA. When SDA is blocked by an undefined state the only way to get the MS5803-14BA to work is to send a power on reset.

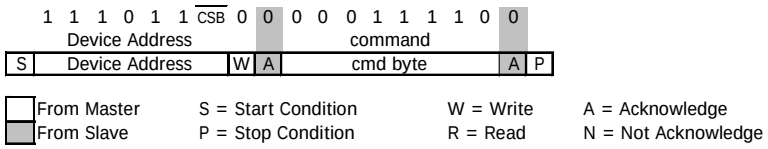

Figure 10: I²C Reset Command

CONVERSION SEQUENCE

A conversion can be started by sending the command to MS5803-14BA. When command is sent to the system it stays busy until conversion is done. When conversion is finished the data can be accessed by sending a Read command, when an acknowledge appears from the MS5803-14BA, you may then send 24 SCLK cycles to get all result bits. Every 8 bit the system waits for an acknowledge signal.

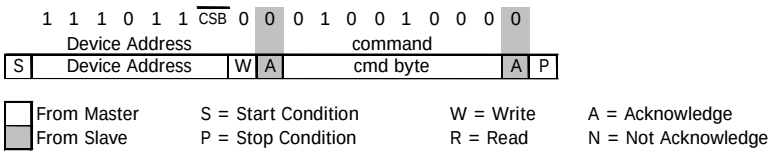

Figure 11: I²C Command to initiate a pressure conversion (OSR=4096, typ=D1)

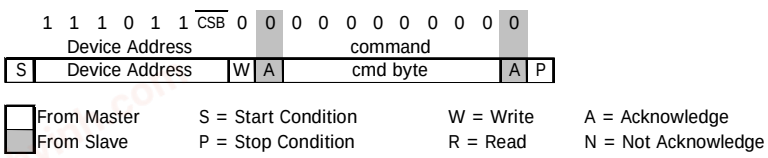

Figure 12: I²C ADC read sequence

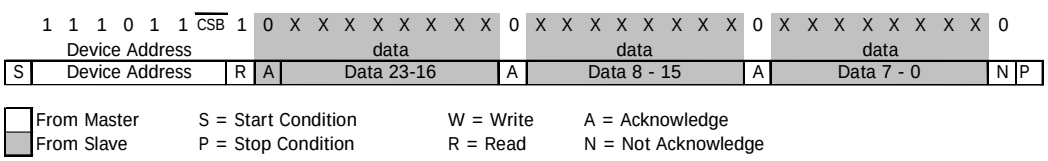

Figure 13: I²C pressure response (D1) on 24 bit from MS5803-14BA

chanhvinh.com

PROM READ SEQUENCE

The PROM Read command consists of two parts. First command sets up the system into PROM read mode. The second part gets the data from the system.

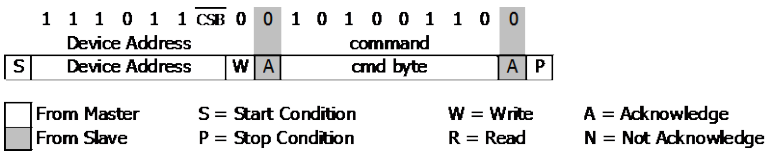

Figure 11: I²C Command to read memory address= 011 (Coefficient 3)

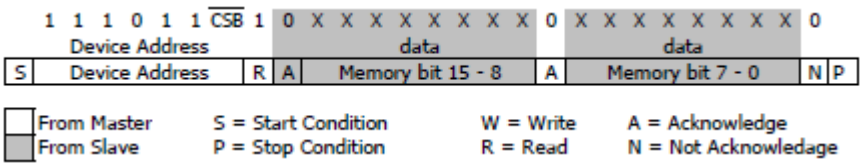

Figure 14: I²C answer from MS5803-14BA

CYCLIC REDUNDANCY CHECK (CRC)

MS5803-14BA contains a PROM memory with 128-Bit. A 4-bit CRC has been implemented to check the data validity in memory. The application note AN520 describes in detail CRC-4 code used.

Add	DB15	DB14	DB13	DB12	DB11	DB10	DB9	DB8	DB7	DB6	DB5	DB4	DB3	DB2	DB1	DB0
0	16 bit reserved for manufacturer															
1	Coefficient 1 (16 bit unsigned)															
2	Coefficient 2 (16 bit unsigned)															
3	Coefficient 3 (16 bit unsigned)															
4	Coefficient 4 (16 bit unsigned)															
5	Coefficient 5 (16 bit unsigned)															
6	Coefficient 6 (16 bit unsigned)															
7													CRC			

Figure 15: Memory PROM mapping

chanhvinh.com

APPLICATION CIRCUIT

The MS5803-14BA is a circuit that can be used in conjunction with a microcontroller in mobile depth-meter applications. It is designed for low-voltage systems with a supply voltage of 3 V.

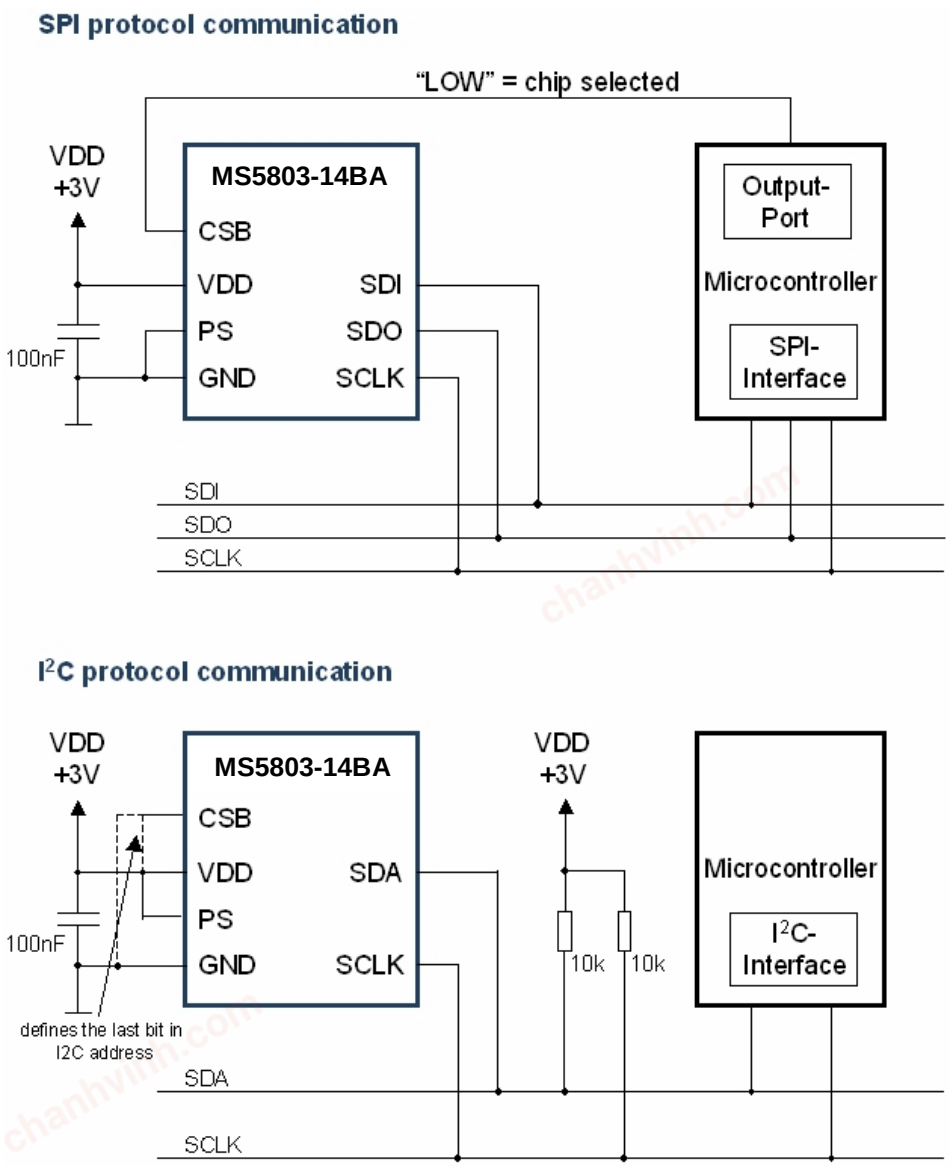

Figure 16: Typical application circuit with SPI / I^2C protocol communication

chanhvinh.com

PACKAGE OUTLINE AND PIN CONFIGURATION

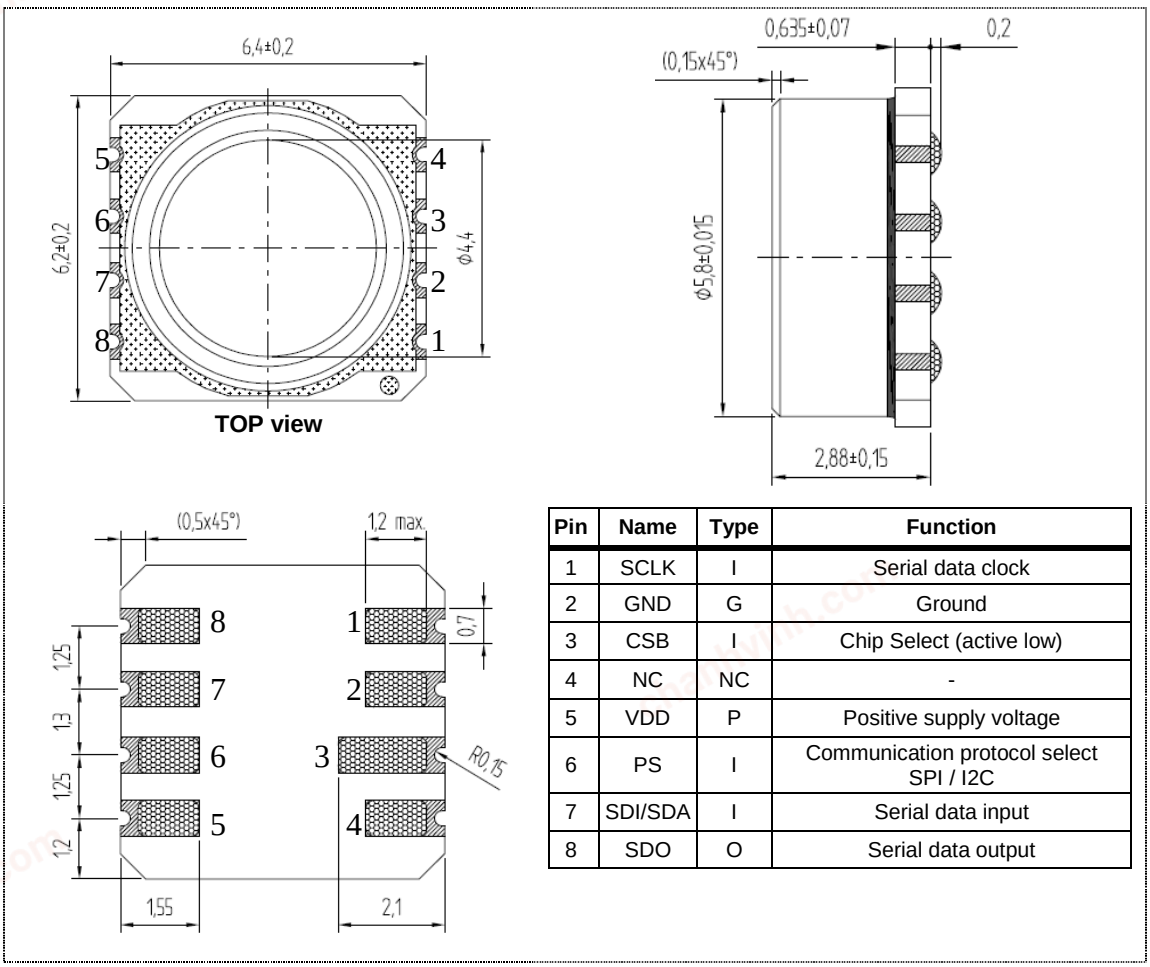

Pin	Name	Type	Function
1	SCLK	I	Serial data clock
2	GND	G	Ground
3	CSB	I	Chip Select (active low)
4	NC	NC	-
5	VDD	P	Positive supply voltage
6	PS	I	Communication protocol select SPI / I2C
7	SDI/SDA	I	Serial data input
8	SDO	O	Serial data output

Figure 17: MS5803-14BA package outlines, pin configuration and description

Notes: (1) Dimensions in mm
(2) General tolerance ±0.1
(3) Cap centering ± 0.15 from center of the ceramic

RECOMMENDED PAD LAYOUT

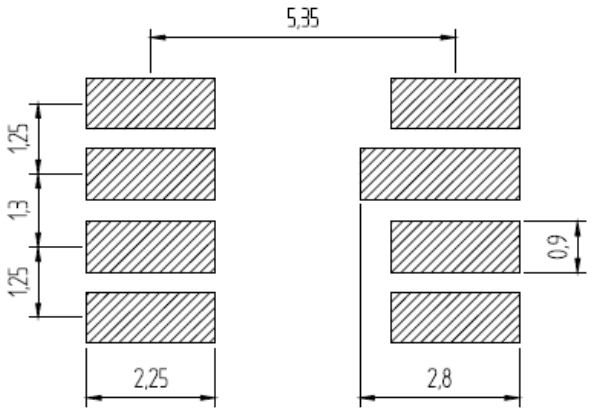

chanhvinh.com

SHIPPING PACKAGE

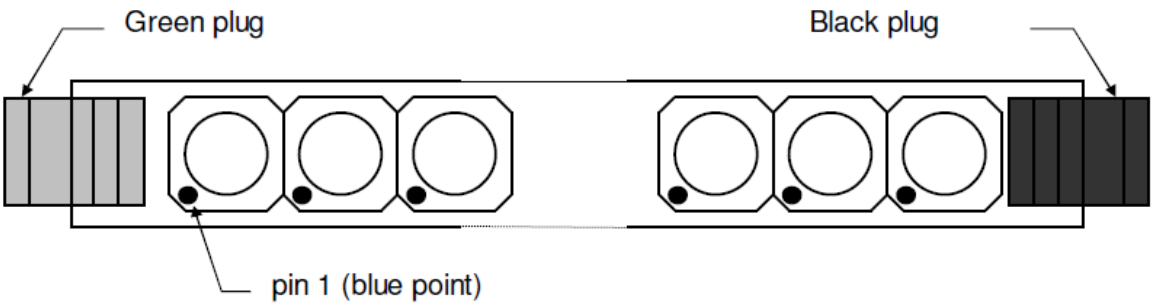

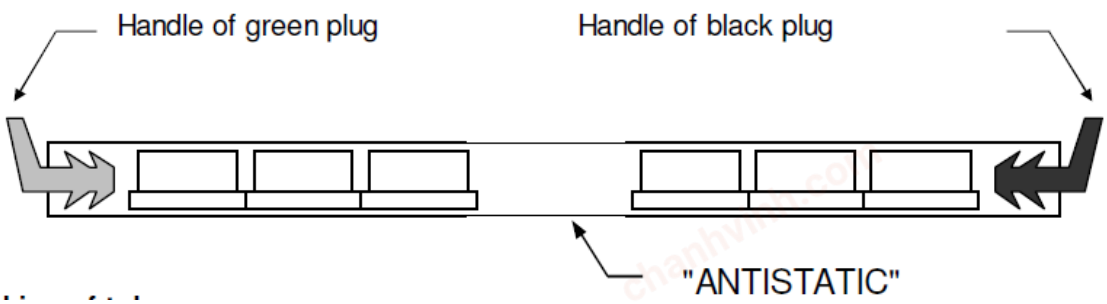

Tube

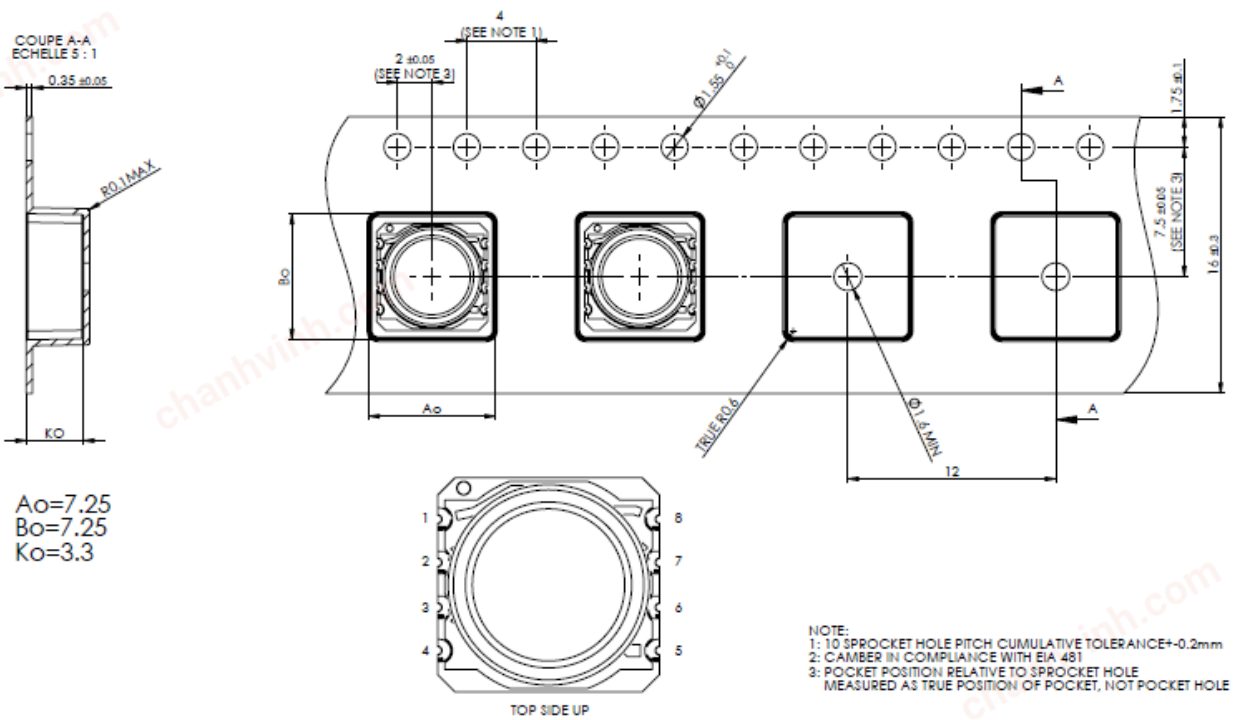

Tape & reel

chanhvinh.com

MOUNTING AND ASSEMBLY CONSIDERATIONS

SOLDERING

Please refer to the application note AN808 available on our website for all soldering issues.

MOUNTING

The MS5803-14BA can be placed with automatic Pick & Place equipment using vacuum nozzles. It will not be damaged by the vacuum. Due to the low stress assembly the sensor does not show pressure hysteresis effects. It is important to solder all contact pads.

CONNECTION TO PCB

The package outline of the module allows the use of a flexible PCB for interconnection. This can be important for applications in watches and other special devices.

SEALING WITH O-RINGS

In products like outdoor watches the electronics must be protected against direct water or humidity. For those products the MS5803-14BA provides the possibility to seal with an O-ring. The protective cap of the MS5803-14BA is made of special anticorrosive stainless steel with a polished surface. In addition to this the MS5803-14BA is filled with silicone gel covering the sensor and the bonding wires. The O-ring (or O-rings) shall be placed at the outer diameter of the metal cap. This method avoids mechanical stress because the sensor can move in vertical direction.

CLEANING

The MS5803-14BA has been manufactured under cleanroom conditions. It is therefore recommended to assemble the sensor under class 10’000 or better conditions. Should this not be possible, it is recommended to protect the sensor opening during assembly from entering particles and dust. To avoid cleaning of the PCB, solder paste of type “no-clean” shall be used. Cleaning might damage the sensor!

ESD PRECAUTIONS

The electrical contact pads are protected against ESD up to 4 kV HBM (human body model). It is therefore essential to ground machines and personnel properly during assembly and handling of the device. The MS5803-14BA is shipped in antistatic transport boxes. Any test adapters or production transport boxes used during the assembly of the sensor shall be of an equivalent antistatic material.

DECOUPLING CAPACITOR

Particular care must be taken when connecting the device to the power supply. A 100 nF ceramic capacitor must be placed as close as possible to the MS5803-14BA VDD pin. This capacitor will stabilize the power supply during data conversion and thus, provide the highest possible accuracy.

chanhvinh.com

MS5803-14BA Miniature 14 bar Module

ORDERING INFORMATION

Product Code	Product	Art. No	Delivery Form
MS5803-14BA01	Miniature 14 bar Module	MS580314BA01-00	Tube
MS5803-14BA01	Miniature 14 bar Module	MS580314BA01-50	Tape& reel TOP-UP

FACTORY CONTACTS

NORTH AMERICA

Measurement Specialties
45738 Northport Loop West
Fremont, CA 94538

Tel: +1 800 767 1888
Fax: +1 510 498 1578
e-mail: pfg.cs.amer@meas-spec.com
Website: www.meas-spec.com

EUROPE

MEAS Switzerland Sàrl
Ch. Chapons-des-Prés 11
CH-2022 Bevaix

Tel: +41 32 847 9550
Fax: + 41 32 847 9569
e-mail: sales.ch@meas-spec.com
Website: www.meas-spec.com

ASIA

Measurement Specialties (China), Ltd.
No. 26 Langshan Road
Shenzhen High-Tech Park (North)
Nanshan District, Shenzhen, 518057
China
Tel: +86 755 3330 5088
Fax: +86 755 3330 5099
e-mail: pfg.cs.asia@meas-spec.com
Website: www.meas-spec.com

The information in this sheet has been carefully reviewed and is believed to be accurate; however, no responsibility is assumed for inaccuracies. Furthermore, this information does not convey to the purchaser of such devices any license under the patent rights to the manufacturer. Measurement Specialties, Inc. reserves the right to make changes without further notice to any product herein. Measurement Specialties, Inc. makes no warranty, representation or guarantee regarding the suitability of its product for any particular purpose, nor does Measurement Specialties, Inc. assume any liability arising out of the application or use of any product or circuit and specifically disclaims any and all liability, including without limitation consequential or incidental damages. Typical parameters can and do vary in different applications. All operating parameters must be validated for each customer application by customer's technical experts. Measurement Specialties, Inc. does not convey any license under its patent rights nor the rights of others.