chanhvinh.com

Type TE Series

Key Features

Up to 2500W Power rating in free air

Flameproof construction – UL94V coating

RoHS compliant

Custom terminations / leads available

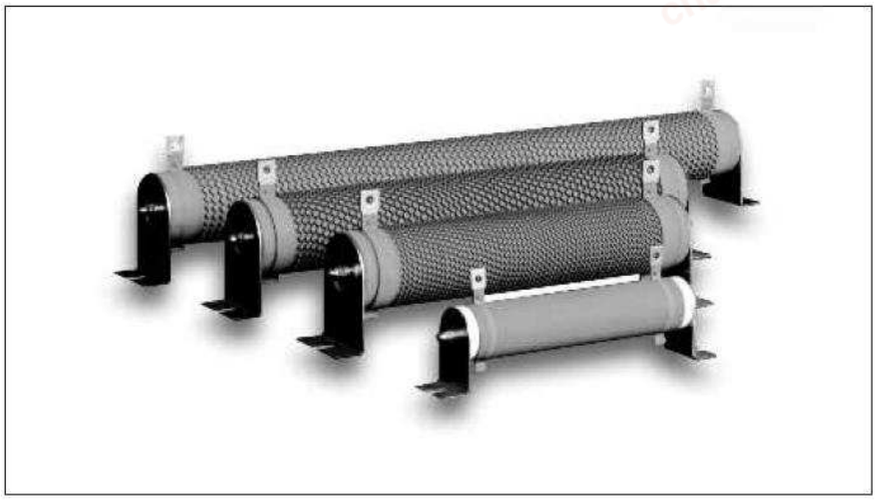

Applications

Large electrical and production machinery

Load test simulation

Motor start / stop cycles

Dynamic braking

Equipment discharge

TE Connectivity is a leading supplier of standard and custom-designed power resistors for industrial, control and general- purpose applications.

The TE range of flameproof coated tubular ceramic core resistors use both standard and edge wound (corrugated) winding methods to improve power handling capability. Designed for heavy duty machinery, electrical equipment, motor control etc. requiring stability and reliability.

Characteristics – Electrical

Power rating @70°C in free air	50W – 2500W (see table)
Resistance range	See table
Selection series	E12
Tolerance	±5% ±10%
Temperature Coefficient of resistance	<20Ω ±400PPM/°C ≥20Ω ±300PPM/°C
Operating temperature range	-55 ~ +155°C
Short term overload	3 x rated power / 5 seconds
Dielectric strength	2500VAC Min.
Insulation resistance	DC500V 20MΩ min.

chanhvinh.com

Specifications – Electrical

Power Rating	Resistance Value	Tolerance	Appearance
50W	R10 ~ 2K7	±5% ±10%	Smooth
60W	R10 ~ 2K7	±5% ±10%	Smooth
80W	R10 ~ 2K7	±5% ±10%	Smooth
100W	1R0 ~ 2K7	±5% ±10%	Smooth
120W	1R0 ~ 2K7	±5% ±10%	Smooth
150W	1R0 ~ 2K7	±5% ±10%	Smooth
200W	1R0 ~ 9R1	±5% ±10%	Ribbed
	10R ~ 2K7	±5% ±10%	Smooth
300W	1R0 ~ 9R1	±5% ±10%	Ribbed
	10R ~ 2K7	±5% ±10%	Smooth
400W	1R0 ~ 15R	±5% ±10%	Ribbed
	16R ~ 2K7	±5% ±10%	Smooth
500W	1R0 ~ 20R	±5% ±10%	Ribbed
	21R ~ 2K7	±5% ±10%	Smooth
600W	1R0 ~ 20R	±5% ±10%	Ribbed
	21R ~ 2K7	±5% ±10%	Smooth
750W	1R0 ~ 75R	±5% ±10%	Ribbed
	76R ~ 2K7	±5% ±10%	Smooth
1000W	1R0 ~ 100R	±5% ±10%	Ribbed
	101R ~ 2K7	±5% ±10%	Smooth
1200W	1R0 ~ 100R	±5% ±10%	Ribbed
	101R ~ 2K7	±5% ±10%	Smooth
1500W	1R0 ~ 120R	±5% ±10%	Ribbed
	121R ~ 2K7	±5% ±10%	Smooth
2000W	1R0 ~ 120R	±5% ±10%	Ribbed
	121R ~ 2K7	±5% ±10%	Smooth
2500W	1R0 ~ 120R	±5% ±10%	Ribbed
	121R ~ 2K7	±5% ±10%	Smooth

Voltage rating:

Resistors shall have a rated direct-current (DC) continuous working voltage or an approximate sine-wave root-mean-square (RMS) alternating-current (AC) continuous working voltage at commercial line frequency and waveform corresponding to the power rating, as determined from the following formula:

$RCWV = \sqrt{P} \times R$

Where : RCWV = Rated DC or RMS AC continuous working voltage at commercial-line frequency and waveform (volt)

P = Power Rating (watt)

R = Nominal Resistance (ohm)

chanhvinh.com

Derating Curve

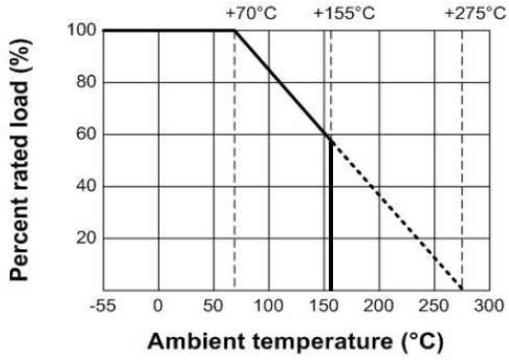

Temperature Rise Chart

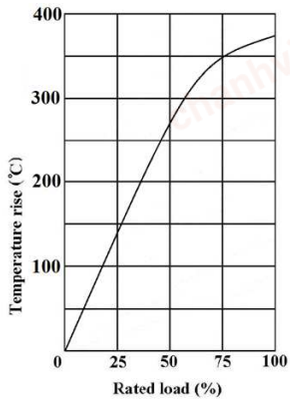

Construction:

Smooth:

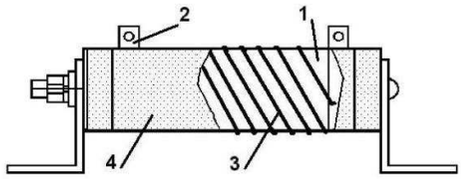

Ribbed:

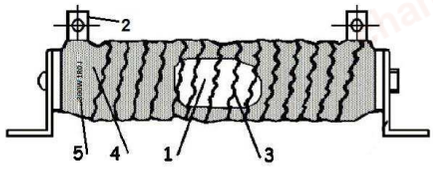

No.	Name	Material	Material Generic Name
1	Basic Body	Rod Type Ceramics	Al_2O_3, SiO_2
2	Terminal	Tin plated terminal cap	Fe : 73%, Mn : 21%, C : 5%
3	Resistance Wire	Ni-Cr or Cu-Ni Alloy	Ni-Cr or Cu-Ni Alloy
4	Coating	Insulated and non-flame paint (Color: Green)	Non-Flame paint UL94V
5	Marking	Marking Ink	---

Marking

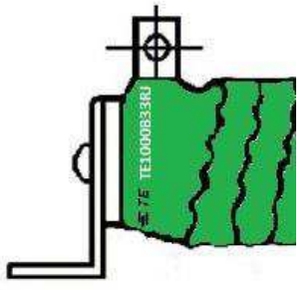

chanhvinh.com

Environmental Characteristics:

Characteristics	Limits	Test Methods (JIS C 5201-1)
Temperature Coefficient	<20Ω : ± 400 PPM/°C Max. ≥20Ω : ± 300 PPM/°C Max.	Natural Resistance change per temperature degree centigrade. $\frac{R_2-R_1}{R_1(t_2-t_1)} \times 10^6$ (PPM/°C) R_1 : Resistance value at room temperature (t_1) R_2 : Resistance value at room temperature +100°C (t_2) (Sub-clause 4.8)
Short term overload	±(2% + 0.05Ω) Max. with no evidence of mechanical damage	Permanent resistance change after the application of a potential of 3 x RCWV for 5 seconds (Sub-clause 4.13
Terminal Strength	No evidence of mechanical damage	**Direct load** : Resistance to a 2.5 kgs direct load for 10 secs. in the direction of the longitudinal axis of the terminal leads **Twist Test** : Terminal leads shall be bent through 90 ° at a point of about 6mm from the body of the resistor and shall be rotated through 360° about the original axis of the bent terminal in alternating direction for a total of 3 rotations (Sub-clause 4.16)
Solderability	95 % coverage Min.	The area covered with a new smooth, clean, shiny and continuous surface free from concentrated pinholes. Test temp. of solder : 245°C ± 3°C Dwell time in solder : 2 ~ 3 seconds (Sub-clause 4.17)
Soldering Temp. Reference	Electrical Characteristics shall be satisfied without distinct deformation in appearance. (95% coverage Min.)	Terminals immersed into solder bath to 3.2 ~ 4.8mm from the body. Permanent resistance change shall be checked. <u>Wave soldering condition (2 cycles max.)</u> Pre-heat : 100 ~ 120 °C, 30 ± 5sec. Suggested solder temp.: 235 ~ 255 °C, 10 sec. (max.) Peak temp.: 260 °C <u>Hand soldering condition:</u> Hand Soldering bit temp. : 380 ± 10 °C Dwell time in solder : 3 +1/-0 sec.
Resistance to soldering heat	Resistance change rate ±(1%+0.05Ω) with no evidence of mechanical damage	Permanent resistance change when terminals immersed to 3.2 ~ 4.8mm from body in 350°C ±10°C solder for 3±0.5 seconds Sub-clause 4.18
Load life in humidity	Resistance change rate ±(5%+ 0.05Ω) Max. with no evidence of mechanical damage	Resistance change after 1,000 hours (1.5 hours "on", 0.5 hour "off") at RCWV in a humidity test chamber controlled at 40 °C± 2 °C and 90 to 95 % relative humidity (Sub-clause 4.24.2.1)
Load Life	Resistance change rate ±(5%+ 0.05Ω) Max. with no evidence of mechanical damage	Permanent resistance change after 1,000 hours operating at RCWV with duty cycle of (1.5 hours "on", 0.5 hour "off") at 70°C ± 2°C ambient (Sub-clause 4.25.1)

chanhvinh.com

High Power Wire Wound Resistor

Dimensions:

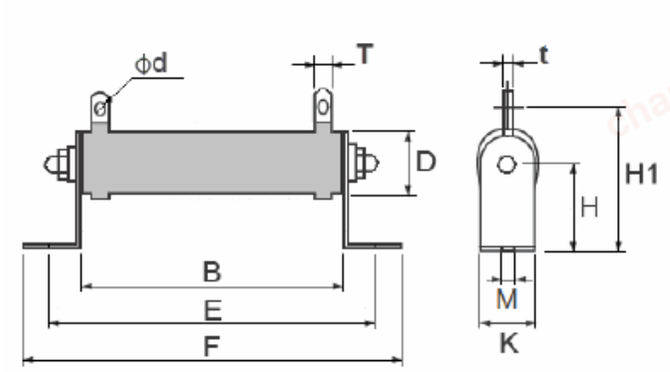

Power rating	Dimension (mm)										
	B±2	E±5	F±3	D±2	H±1	H1±3	M±0.5	K±1	T±0.5	t±0.5	Ød ±0.5
50W	102	124	146	28	28	61	6.5	28	8	1.8	4.3
60W	102	124	146	28	28	61	6.5	28	8	1.8	4.3
80W	152	174	196	28	28	61	6.5	28	8	1.8	4.3
100W	182	204	226	28	28	61	6.5	28	8	1.8	4.3
120W	182	204	226	28	28	61	6.5	28	8	1.8	4.3
150W	195	217	239	40	41	81	8	40	10	1.8	5.5
200W	195	217	239	40	41	81	8	40	10	1.8	5.5
300W	282	304	326	40	41	81	8	40	10	1.8	5.5
400W	282	304	326	40	41	81	8	40	10	1.8	5.5
500W	316	338	360	50	45	101	8	50	16	1.8	6.5
600W	345	367	389	40	41	81	8	40	10	1.8	5.5
750W	316	338	360	50	45	101	8	50	16	1.8	6.5
1000W	300	325	350	60	60	119	8.5	60	15	2	6.5
1200W	415	440	465	60	60	119	8.5	60	15	2	6.5
1500W	415	440	465	60	60	119	8.5	60	15	2	6.5
2000W	510	535	560	60	60	119	8.5	60	15	2	6.5
2500W	600	625	650	60	60	119	8.5	60	15	2	6.5

Label

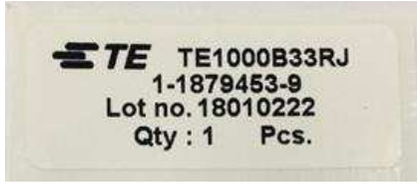

How To Order

TE	50	B	1K0	J
Common Part	Power Rating	Mounting	Resistance Value	Tolerance
TE – High Power Wirewound Resistor	50 50W 60 60W 80 80W 100 100W etc.	A – No Bracket B – With Bracket (standard)	100R - 100Ω 1K0 - 1000Ω 10K – 10,000Ω	J - ±5% K - ±10%

Dimensions in millimetres unless otherwise specified

Dimensions Shown for reference purposes only. Specifications subject to change

For Email, phone or live chat, go to: www.te.com/help