chanhvinh.com

Connectors for Micro ISO Relays

Connectors in 3 different versions

■ **PCB Socket**

With the solderable connector Micro ISO relays with plug-in terminals can be mounted on leadframes. This allows easy and reasonable replacement in case of service.

■ **Connector**

5 pole connector with snap-in pin to lock in frame.

■ **Connector with mounting flap**

5 pole connector that can be mounted individually or interlocked.
The connector has a snap-in pin to lock in frame.
The mounting bracket also allows screw-on.

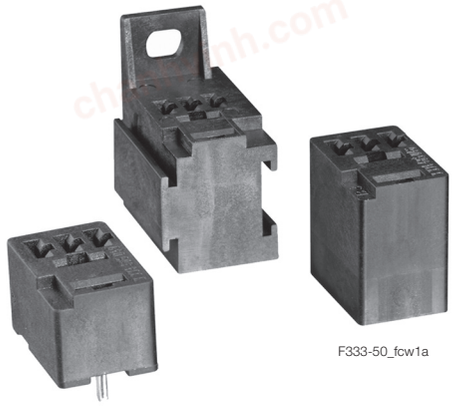

F333-50_fcw1a

Technical Data

Weight	
PCB socket	approx. 5.9g (0.21oz)
Connector	approx. 5.4g (0.19oz)
Connector with mounting flap	approx. 11.9g (0.42oz)
Storage conditions	according to IEC600688[1)]
Packaging/unit	
PCB socket (V23333-Z0002-B049)	800 pcs.
Connector (V23333-Z0001-B046)	400 pcs.
Connector with mounting flap (V23333-Z1001-B045)	150 pcs.

1) For general storage and processing recommendations please refer to the Application Notes and especially to storage in our Definitions or at http://relays.te.com/appnotes/

Dimensions

PCB socket V23333-Z0002-B049
Mounting recommendation: to keep insertion force away from the PCB the soldering of the socket to the PCB should be done with already inserted relay.

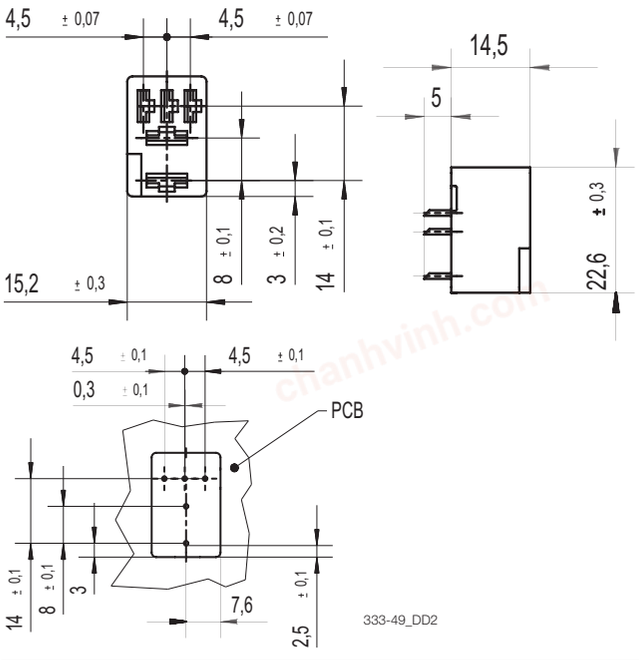

333-49_DD2

Connector V23333-Z1001-B046
Terminals to be ordered separately.

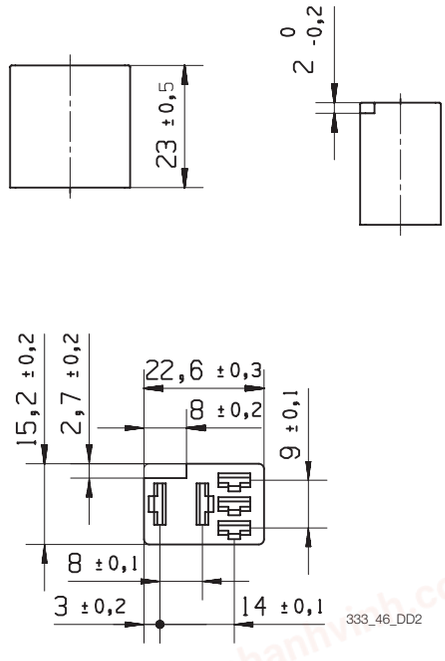

333_46_DD2

01-2012, Rev. 0112
www.te.com
© 2011 Tyco Electronics Corporation,
a TE Connectivity Ltd. company.

Datasheets and product specification according to IEC 61810-1 and to be used only together with the 'Definitions' section.

Datasheets and product data is subject to the terms of the disclaimer and all chapters of the 'Definitions' section, available at http://relays.te.com/definitions

Datasheets, product data, 'Definitions' section, application notes and all specifications are subject to change.

chanhvinh.com

Connectors for Micro ISO Relays

Connector with mounting flap V23333-Z1001-B045
To be mounted individually or can be interlocked.
Terminals to be ordered separately.

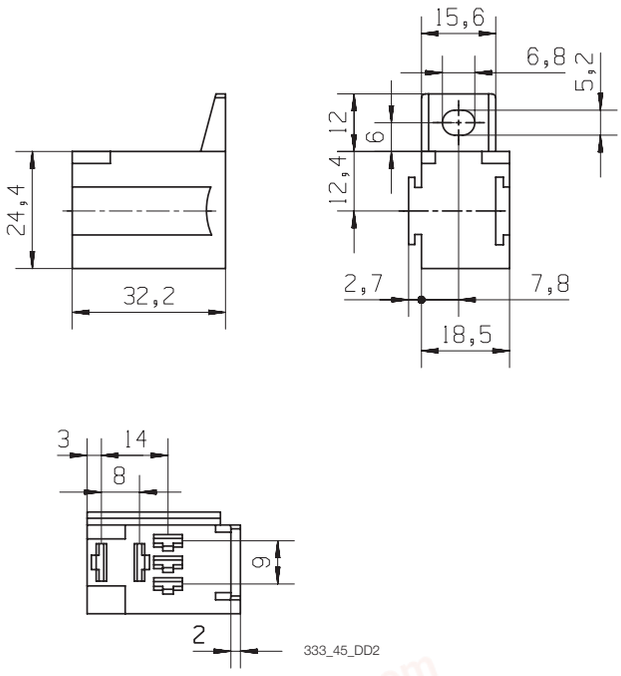

		Selection of fitting crimp terminals[1] (Ph. bronze tin plated)[2]							
Part numbers for connectors		Terminal size	Wire mm²	Use for	Quantity required		Use in cavities		Part number for crimp terminals
Product code	Part number				Form A	Form C	Form A	Form C	
V23333-Z0002-B049	2-1904045-7	–	–	–	–	–	–	–	–
V23333-Z0001-B046	1-1904045-6	4.8 x 0.8 4.8 x 0.8 6.3 x 0.8	0.5 - 1.5 1.0 - 2.5 1.0 - 2.5	Coil Load Load	2 – 2	2 1 2	1 and 2 – 3 and 5	1 and 2 4 3 and 5	280919-4 281197-2 160927-4
V23333-Z1001-B045	1-1904045-5	4.8 x 0.8 4.8 x 0.8 6.3 x 0.8	0.5 - 1.5 1.0 - 2.5 1.0 - 2.5	Coil Load Load	2 – 2	2 1 2	1 and 2 – 3 and 5	1 and 2 4 3 and 5	280919-4 281197-2 160917-2

1) Crimp terminals to be ordered separately.
2) Mentioned crimp terminals are delivered in strip-form, loose pieces and hand tool available on request.

01-2012, Rev. 0112
www.te.com
© 2011 Tyco Electronics Corporation,
a TE Connectivity Ltd. company.

Datasheets and product specification according to IEC 61810-1 and to be used only together with the 'Definitions' section.

Datasheets and product data is subject to the terms of the disclaimer and all chapters of the 'Definitions' section, available at http://relays.te.com/definitions

Datasheets, product data, 'Definitions' section, application notes and all specifications are subject to change.