chanhvinh.com

Surge arrester

2-electrode arrester

Series/Type:	**A81-A250X**
Ordering code:	**B88069X1500******
Date:	2026-04-01
Version:	04

© TDK Electronics AG 2026. Reproduction, publication and dissemination of this publication, enclosures hereto and the information contained therein without TDK Electronics' prior express consent is prohibited.

chanhvinh.com

Features

- Standard size
- Fast response time
- High current rating
- Stable performance over life
- Very low capacitance
- High insulation resistance
- RoHS-compatible

Applications

- Branch exchange (MDF)
- Line protection
- Subscriber protection

Electrical specifications

DC spark-over voltage [1) 2)]		250	V
Tolerance		±20	%
Min.		200	V
Max.		300	V
Impulse spark-over voltage			
at 100 V/µs	- for 99% of measured values	< 550	V
	- typical values of distribution	< 500	V
at 1 kV/µs	- for 99% of measured values	< 700	V
	- typical values of distribution	< 650	V
Service life			
10 operations	50 Hz, 1 s	20	A
1 operation	50 Hz, 0.18 s (9 cycles)	100	A
10 operations	8/20 µs	20	kA
1 operation	8/20 µs	25	kA
1 operation	10/350 µs	2.5	kA
300 operations	10/1000 µs	200	A
Insulation resistance at 100 V_{DC}		> 10	GΩ
Capacitance at 1 MHz		< 1.5	pF
Arc voltage at 1 A		~ 15	V
Glow to arc transition current		< 0.5	A
Glow voltage		~ 60	V
Weight		~ 2.5	g
Operation and storage temperature		–40 ... +125	°C
Climatic category (IEC 60068-1)		40/125/21	
Marking, blue negative		**TDK 250 YY** 250 - Nominal voltage YY - Year of production	
Certification		UL 497B (E163070)	

1) At delivery AQL 0.65 level II, DIN ISO 2859
2) In ionized mode

Terms in accordance with ITU-T Rec. K.12 and IEC 61643-311.

chanhvinh.com

Dimensional drawing in mm

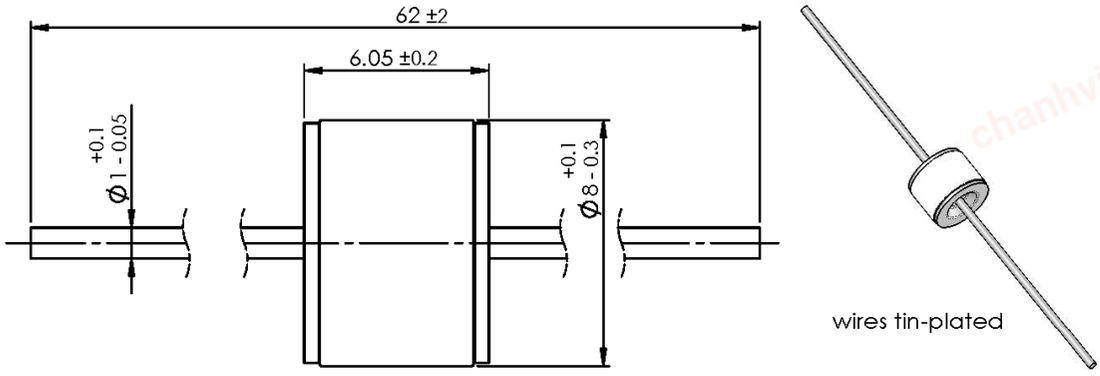

Ordering codes and packing advices

*B88069X1500**S202** = 200 pcs. on 10 taped stripes B88069X1500**T502** = 500 pcs. on tape & reel*

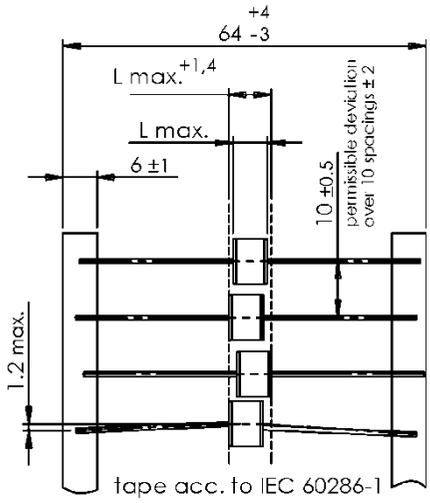

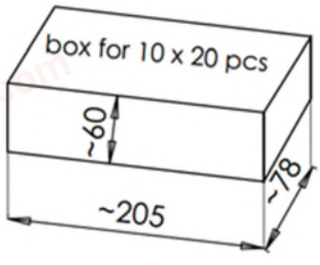

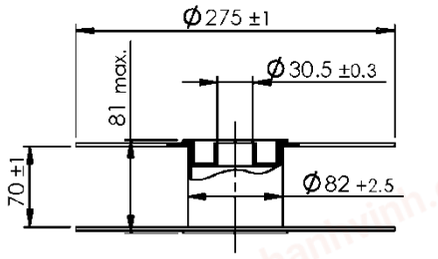

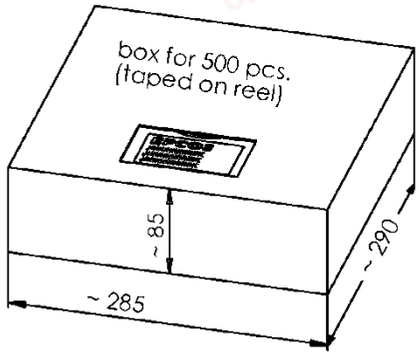

chanhvinh.com

Soldering parameter

Wave soldering

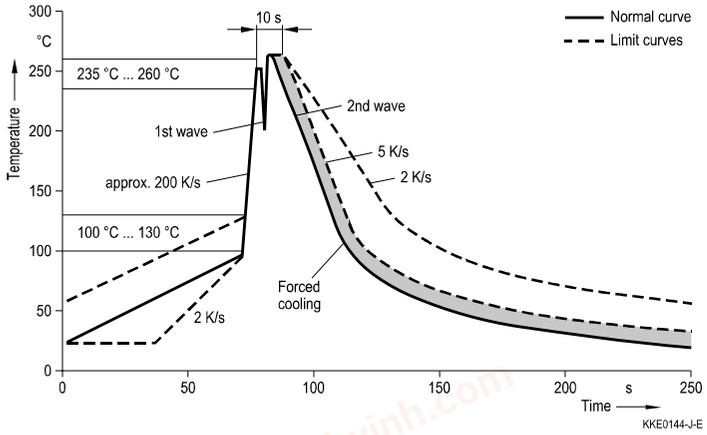

Wave profile features	Pb-free assembly
Solder	Sn 95.5 / Ag 3.8 / Cu 0.7
Solder bath temperature	263 (±3) °C
Dwell time	< 3 s

Soldering profile applied to a single soldering process.

Cautions and warnings

- Do not operate surge arresters in power supply networks, whose maximum operating voltage exceeds the minimum spark-over voltage of the surge arresters.
- Surge arresters may become hot in the event of longer periods of current stress (burn risk). In the event of overload the connectors may fail or the component may be destroyed.
- If the contacts of the surge arresters are defective, current load can cause sparks and loud noises.
- Surge arresters must be handled with care and must not be dropped.
- Do not continue to use damaged surge arresters.

Display of ordering codes for TDK Electronics products

The ordering code for one and the same product can be represented differently in data sheets, data books, other publications, on the company website, or in order-related documents such as shipping notes, order confirmations and product labels. **The varying representations of the ordering codes are due to different processes employed and do not affect the specifications of the respective products**. Detailed information can be found on the Internet under www.tdk-electronics.tdk.com/orderingcodes.

chanhvinh.com

Important notes

The following applies to all products named in this publication:

1. Some parts of this publication contain **statements about the suitability of our products for certain areas of application**. These statements are based on our knowledge of typical requirements that are often placed on our products in the areas of application concerned. We nevertheless expressly point out **that such statements cannot be regarded as binding statements about the suitability of our products for a particular customer application.** As a rule we are either unfamiliar with individual customer applications or less familiar with them than the customers themselves. For these reasons, it is always ultimately incumbent on the customer to check and decide whether a product with the properties described in the product specification is suitable for use in a particular customer application.
2. We also point out that **in individual cases, a malfunction of electronic components or failure before the end of their usual service life cannot be completely ruled out in the current state of the art, even if they are operated as specified.** In customer applications requiring a very high level of operational safety and especially in customer applications in which the malfunction or failure of an electronic component could endanger human life or health (e.g. in accident prevention or life-saving systems), it must therefore be ensured by means of suitable design of the customer application or other action taken by the customer (e.g. installation of protective circuitry or redundancy) that no injury or damage is sustained by third parties in the event of malfunction or failure of an electronic component.
3. **The warnings, cautions and product-specific notes must be observed.**
4. In order to satisfy certain technical requirements, **some of the products described in this publication may contain substances subject to restrictions in certain jurisdictions (e.g. because they are classed as hazardous)**. Useful information on this will be found in our Material Data Sheets on the Internet (www.tdk-electronics.tdk.com/material). Should you have any more detailed questions, please contact our sales offices.
5. We constantly strive to improve our products. Consequently, **the products described in this publication may change from time to time**. The same is true of the corresponding product specifications. Please check therefore to what extent product descriptions and specifications contained in this publication are still applicable before or when you place an order.

   We also **reserve the right to discontinue production and delivery of products**. Consequently, we cannot guarantee that all products named in this publication will always be available. The aforementioned does not apply in the case of individual agreements deviating from the foregoing for customer-specific products.
6. Unless otherwise agreed in individual contracts, **all orders are subject to our General Terms and Conditions of Supply.**
7. **Our manufacturing sites serving the automotive business apply the IATF 16949 standard.** The IATF certifications confirm our compliance with requirements regarding the quality management system in the automotive industry. Referring to customer requirements and customer specific requirements (“CSR”) TDK always has and will continue to have the policy of respecting individual agreements. Even if IATF 16949 may appear to support the acceptance of unilateral requirements, we hereby like to emphasize that **only requirements mutually agreed upon can and will be implemented in our Quality Management System.** For clarification purposes we like to point out that obligations from IATF 16949 shall only become legally binding if individually agreed upon.

chanhvinh.com

Important notes

8. The trade names EPCOS, CarXield, CeraCharge, CeraDiode, CeraLink, CeraPad, CeraPlas, CSMP, CTVS, DeltaCap, DigiSiMic, FilterCap, FormFit, InsuGate, LeaXield, MediPlas, MiniBlue, MiniCell, MKD, MKK, ModCap, MotorCap, PCC, PhaseCap, PhaseCube, PhaseMod, PhiCap, PiezoBrush, PlasmaBrush, PowerHap, PQSine, PQvar, SIFERRIT, SIFI, SIKOREL, SilverCap, SIMDAD, SiMic, SIMID, SineFormer, SIOV, SurfIND, ThermoFuse, WindCap, XieldCap are **trademarks registered or pending** in Europe and in other countries. Further information will be found on the Internet at www.tdk-electronics.tdk.com/trademarks.

Release 2024-02