chanhvinh.com

Power Line Chokes

Current-compensated ring core triple chokes
440 ... 690 V AC, 0.35 ... 6.2 mH, 5.5 ... 53 A / +70 °C

Series/Type: **B8274*S***

Date: October 2026

© TDK Electronics AG 2026. Reproduction, publication and dissemination of this publication, enclosures hereto and the information contained therein without TDK Electronics' prior express consent is prohibited.

chanhvinh.com

Current-compensated ring core triple chokes

Rated voltage 440 to 690 V AC
Rated current 5.5 to 53 A
Nominal inductance 0.35 ... 6.2 mH / +70 °C



Construction

- Current-compensated ring core triple chokes
- Ferrite core with epoxy coating (UL 94 V-0)
- Additional PET core insulation (optional)
- Plastic base plate, spacer and holder (UL 94 V-0)
- Sector winding
- Color of materials may vary



Features

- High resonance frequency
- Approx. 0.3 ... 1.3% stray inductance for symmetrical interference suppression
- High rated current and rated ambient temperature
- Suitable for wave soldering
- Open construction for forced and convection cooling
- Design complies with IEC/EN 60938-2
- UL 1446 class 155(F) electrical insulation system
- Little to no adhesives used
- RoHS compatible

Applications

- Suppression of common-mode interferences
- Switch-mode applications
- Frequency-variable drives (FVDs)
- Power inverters
- Battery management systems

Terminals

- Ends of winding wires
- Hot-dip tinned

Marking

Product brand, electrical insulation system (optional), ordering code, rated voltages, nominal inductance, rated current, date of manufactue (YYWWD), production place identification code

Delivery mode

- Blister tray (optional) in cardboard box

chanhvinh.com

Technical data and measuring conditions

Test voltage V_{test}	2000 V AC / 2800 V DC, 2 s line/line/line
Rated ambient temperature T_R	+70 °C
Rated current I_R	Referred to 50 Hz and rated ambient temperature T_R (free-air convention cooling, shorted parallel wires)[1)]
Nominal inductance L_N	Measured with Keysight E4980A or compatible, at 0.1 mA, +20 °C Measuring frequency: $L_R \leq 1$ mH: f = 100 kHz $L_R > 1$ mH: f = 10 kHz
Inductance tolerance	±30% at +20°C
Stray inductance $L_{stray, typ}$	Measured with Keysight E4980A or compatible at 5 mA, +20 °C, typical value Measuring frequency: $L_R \leq 1$ mH: f = 100 kHz $L_R > 1$ mH: f = 10 kHz
DC resistance R_{typ}	Measured at +20 °C, typical value, specified per winding
Solderability (lead-free)	Sn96.5Ag3.0Cu0.5 (+245±3) °C, (3±0.3) s Wetting of soldering area ≥95% (to IEC 60068-2-20, test Ta)
Resistance to soldering heat (wave soldering)	+(260 ±5) °C, (10±1) s (to IEC 60068-2-20, test Tb)
Climatic category	40/125/56 (to IEC 60068-1)
Pollution degree	P2 (to IEC 61558-1)
Storage conditions (packaged)	–25°C … +40 °C, ≤75% RH
Approvals (see UL EIS in table "Characteristics and ordering codes	UL1446 Class 155(F) (E320370)

1) Current must be reduced when operating at higher ambient temperature than rated. See "Current derating" for details. Higher current can be applied by using an appropriate forced cooling approach. In any case, temperature of the coil is to be monitored and must not exceed the maximum value specified by the climatic category. The effect of magnetic saturation must be additionally considered when operated with higher current than specified.

chanhvinh.com

Characteristics and ordering codes

I_R A	Alternative rating A	V_R V	L_N mH	$L_{stray,typ}$ µH	R_{typ} mΩ	Pin Ø mm	Weight g	Figure No.	UL EIS	Ordering code
5.5		500	1.40	9	18	0.80	35	01		B82744S4552N030
6.9	7.7/+50°C	500	6.00 1)	36	17	1.18	105	02	X	B82746S4692A040
9		500	0.68	6.8	12	1.00	75	03	X	B82745S4902N001
10		520	1.70 1)	14	9.8	1.25	80	04		B82746S4103A020
10		500	2.00 1)	20	9.6	1.40	90	04		B82746S4103A021
11		440	1.10 1)	13	10	1.25	150	05	X	B82747H4113A020
12		500	1.80	10	6.8	1.50	85	06		B82746S4123N030
13	14/+60°C	550	3.20	16	6.5	1.80	175	07	X	B82746S4143A040
14	12/+85°C	600	0.35	4.7	3.7	1.50	55	08	X	B82745S6123N002
16		500	2.70 3)	16	5.8	2.00	227	09		B82747S4163N030
17.5		500	0.68	4.9	3.9	1.80	105	10	X	B82745S4173N001
18		440	1.70 3)	16	4.7	2.00	200	11		B82747S4183A020
18		440	1.80	17	4.7	2.00	250	12		B82747S4183N021
18		500	4.00 1)	30	5.2	2.24	300	13	X	B82747S4183B040
18.5	20/+60°C	520	1.30 1)	15	5.2	2.00	170	14		B82747S4203A020
20		500	0.75 1)	8	2.7	2.24	145	15	X	B82746S4203A020
20		500	1.15 1)	8	2.7	2.24	145	15	X	B82746S4203A040
23		500	1.50 1)	6.4	3.2	2.24	220	16	X	B82746S4233A040
30	25/+85°C	500	0.85 2)	5.5	1.9	2.50	220	17	X	B82747S4253A040
31		500	0.95	5	1.5	2.80	220	18	X	B82747S6313N061
35	30/+85°C	500	0.82 2)	4	1.4	2.80	230	17	X	B82747S4303A041
36	42/+50°C	440	1.50	10	2.6	2.80	480	19		B82747S4423N020
45		500	0.67	4.8	1.1	2.50	480	20	X	B82747S4453N001
46	50/+60°C	520	0.80 1)	7.5	1.5	3.35	430	21	X	B82748S4503A020
48	62/+40°C	690	1.10	9	1.6	3.35	780	22	X	B82748S6623N030
53	45/+85°C	500	0.30	0.7	0.83	2.50	480	20	X	B82747S4453N002

1) L_R tolerance –30/+50%

2) L_R tolerance +35%

3) L_R tolerance ±35%

chanhvinh.com

Impedance |Z| versus frequency f

(measured with windings in parallel at +20 °C, typical values)

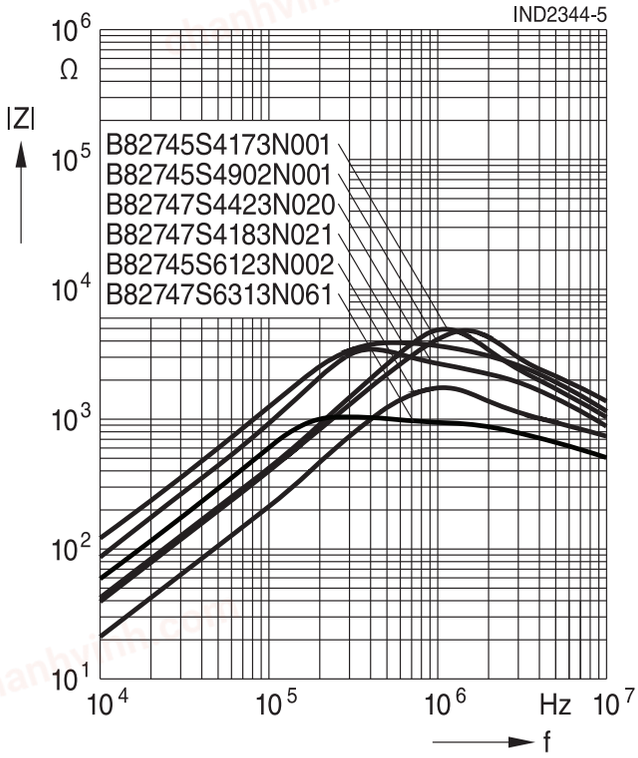

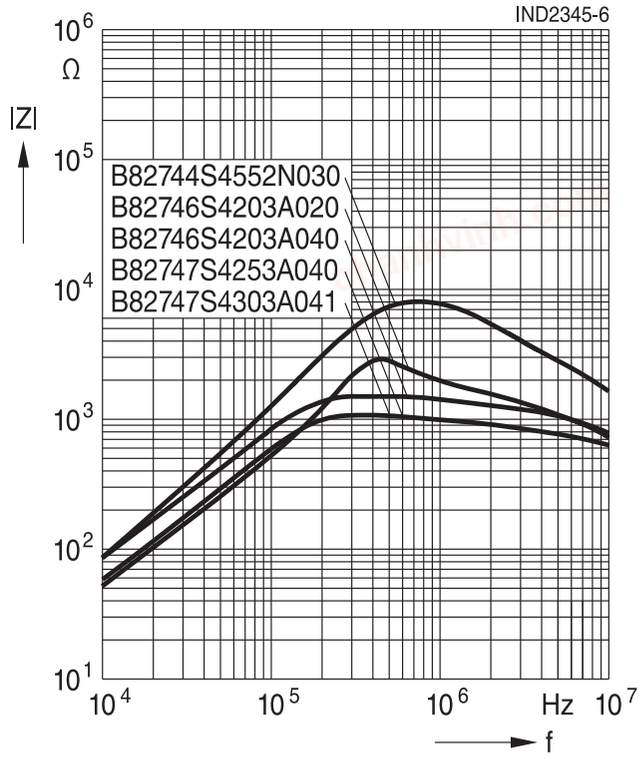

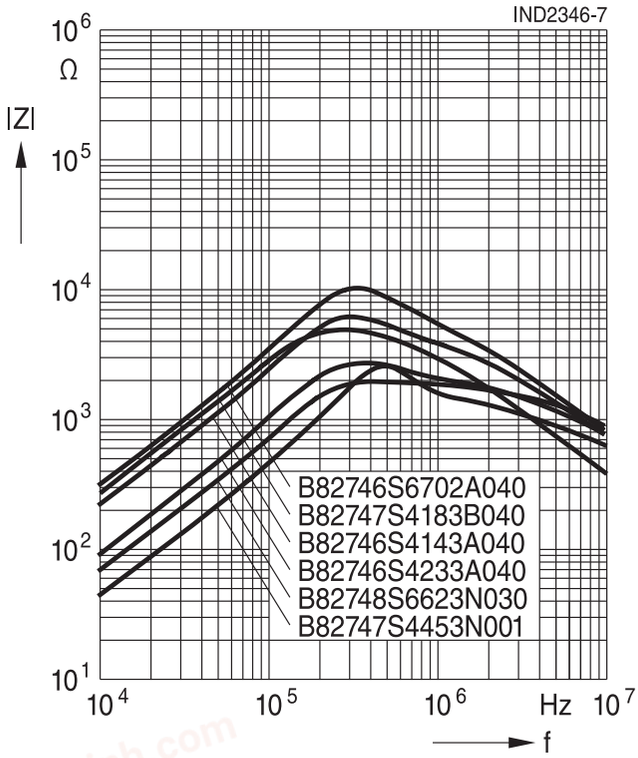

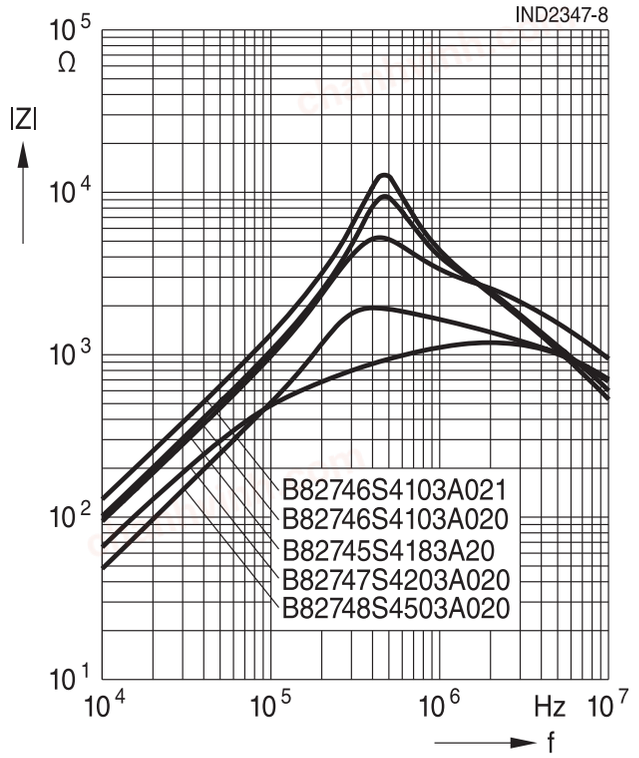

chanhvinh.com

Impedance |Z| versus frequency f

(measured with windings in parallel at +20 °C, typical values)

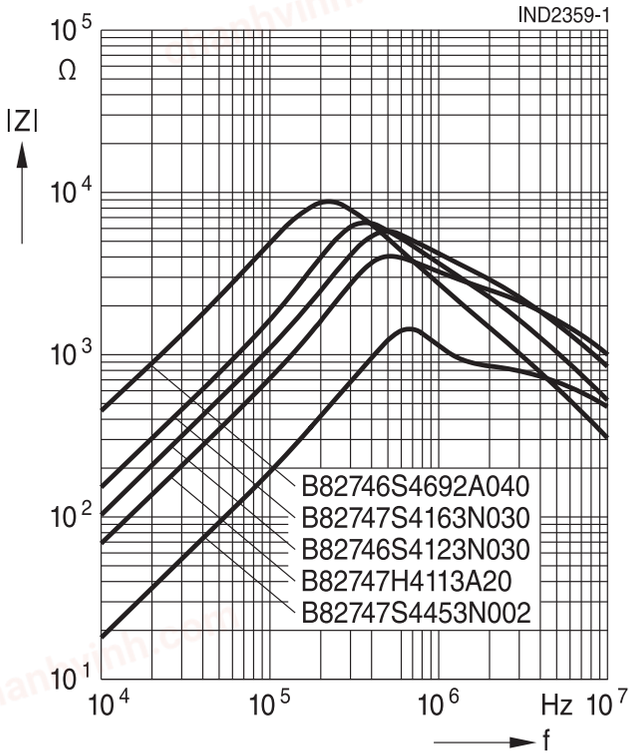

Current derating Iop/IR versus temperature T_A

Rated temperature T_R = +70 °C

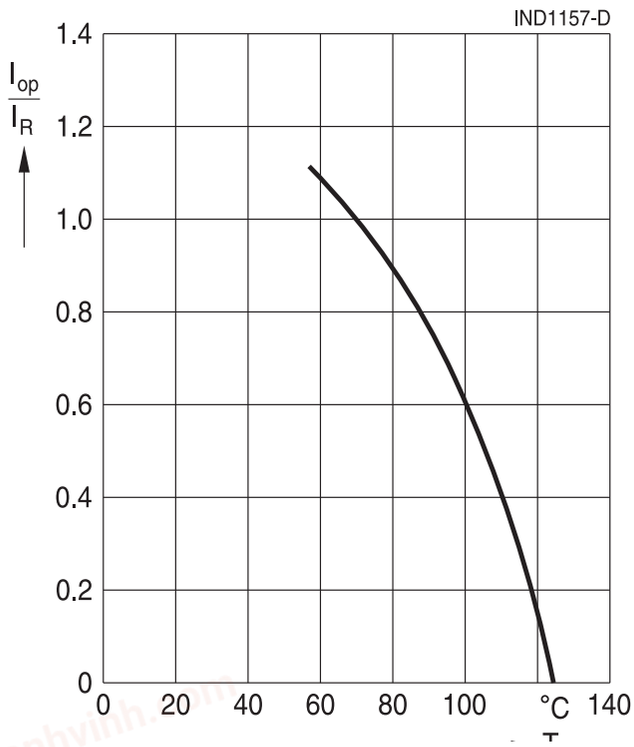

chanhvinh.com

Dimensional drawings and pin configurations

Figure 01 - B82744S4552N030

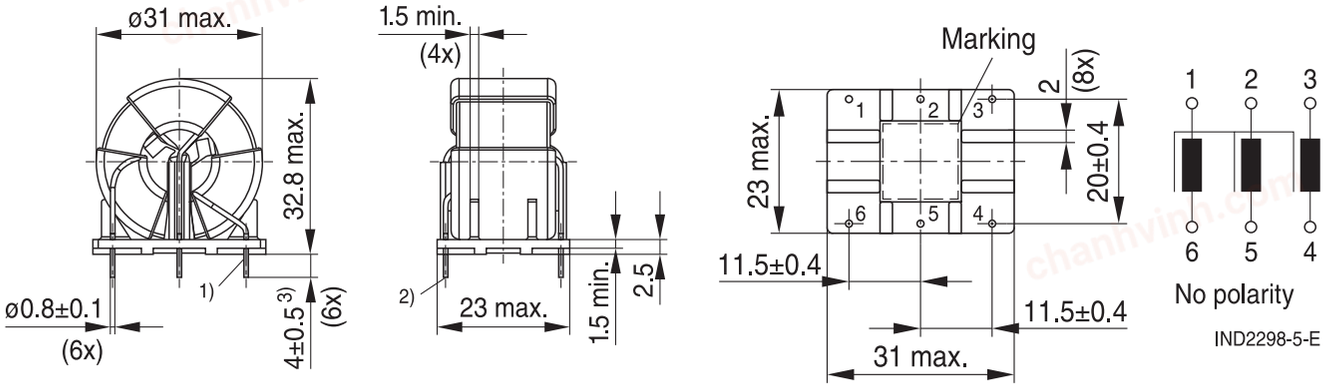

1) Terminals solderable tinned with Sn
2) Tin tips permissible
3) Dimension does not include tin tip

IND2293-0-E

Figure 02 - B82746S4692A040

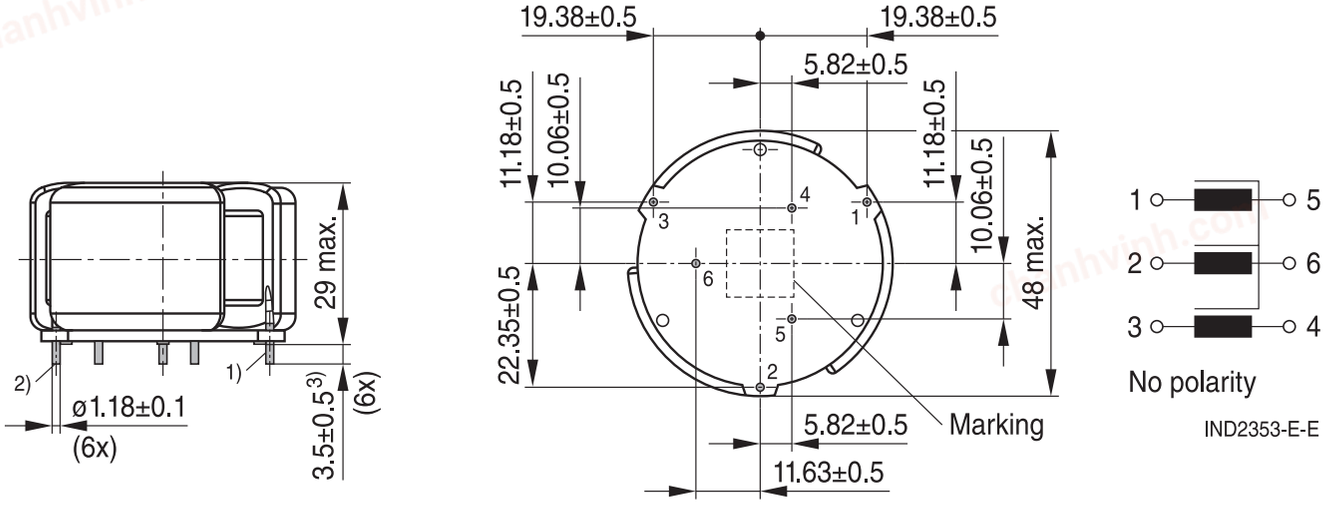

1) Terminals solderable tinned with Sn
2) Tin tips permissible
3) Tin tip is not part of this dimension

IND2354-F-E

Tolerances to ISO 2768-c / ISO 8015.
Size ISO 14405 Ⓔ
All dimensions in mm
Dimensions without tolerance are typical values.

IND2603-Y-E

chanhvinh.com

Figure 03 - B82745S4902N001

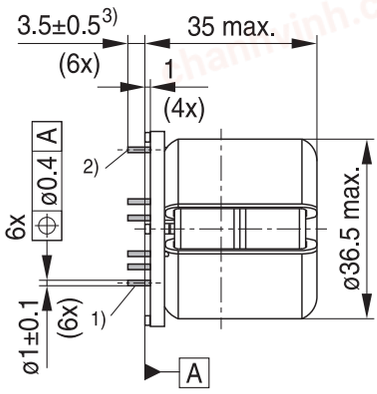

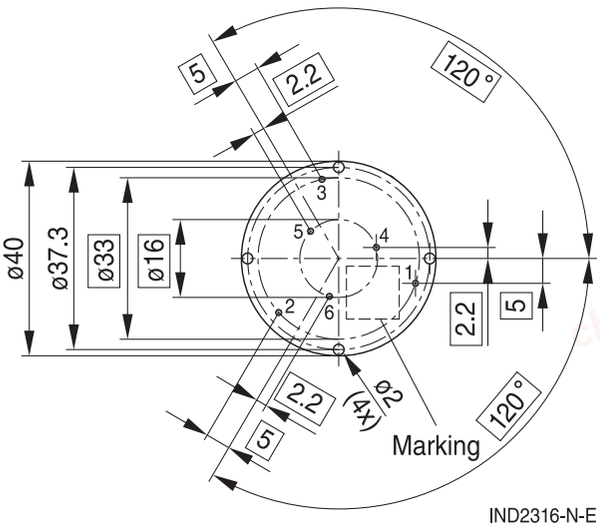

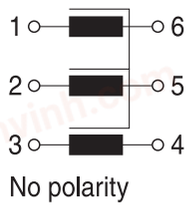

IND2296-3-E

IND2316-N-E

1) Terminals solderable tinned with Sn
2) Tin tips permissible
3) Dimension does not include tin tip

IND2291-Y-E

Figure 04 - B82746S4103A020, B82746S4103A021

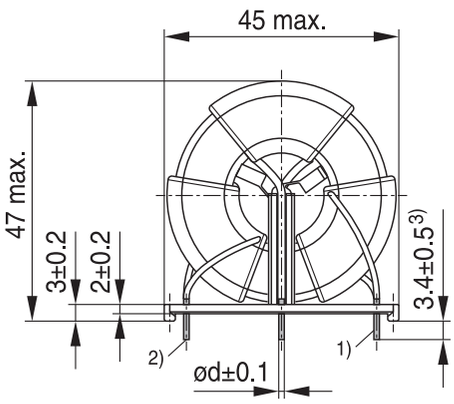

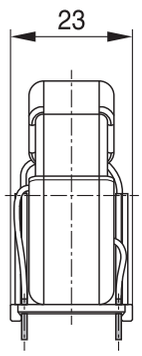

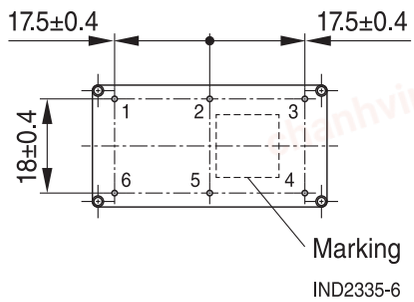

IND2335-6

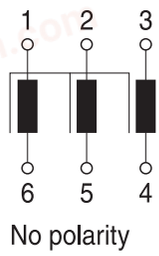

IND2298-5-E

1) Terminals solderable tinned with Sn
2) Tin tips permissible
3) Dimension does not include tin tip

IND2336-7-E

Tolerances to ISO 2768-c / ISO 8015.
Size ISO 14405 E
All dimensions in mm
Dimensions without
tolerance are typical values.

IND2603-Y-E

chanhvinh.com

Figure 05 - B82747H4113A020

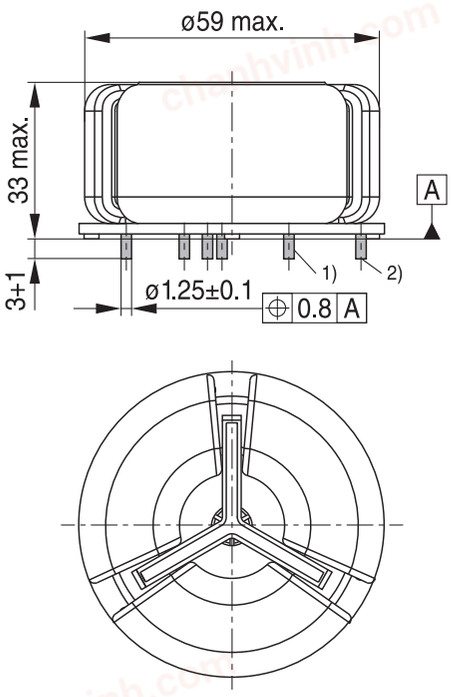

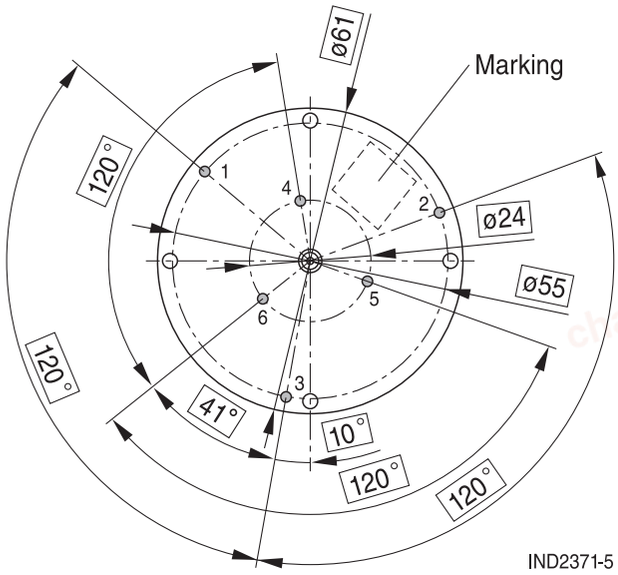

IND2371-5

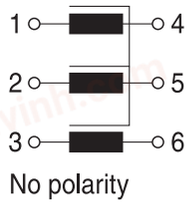

IND2300-7-E

1) Terminals solderable tinned with Sn
2) Tin tips permissible
3) Dimension does not include tin tip

IND2372-7-E

Tolerances to ISO 2768-c / ISO 8015.
Size ISO 14405 E
All dimensions in mm
Dimensions without tolerance are typical values.

IND2603-Y-E

Figure 06 - B82746S4123N030

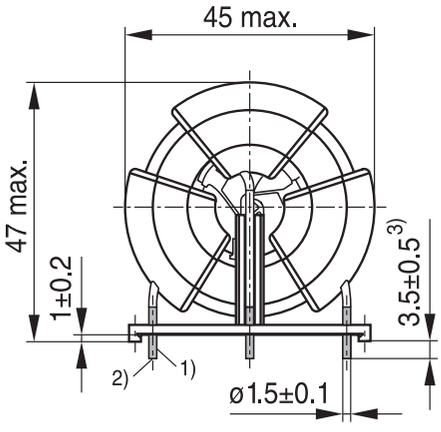

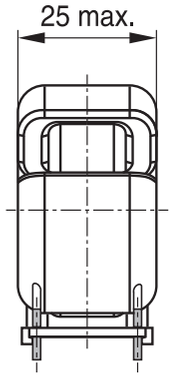

IND2387-4-E

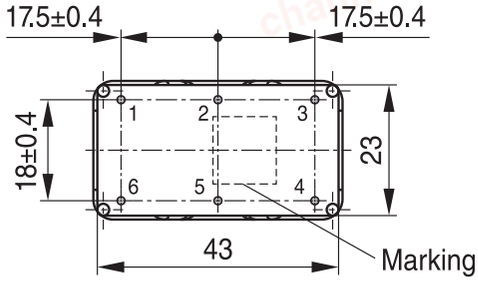

IND2361-5

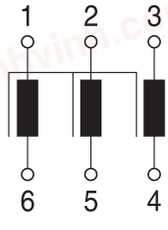

IND2298-5-E

1) Terminals solderable tinned with Sn
2) Tin tips permissible
3) Tin tip is not part of this dimension

chanhvinh.com

Figure 07 - B82746S4143A040

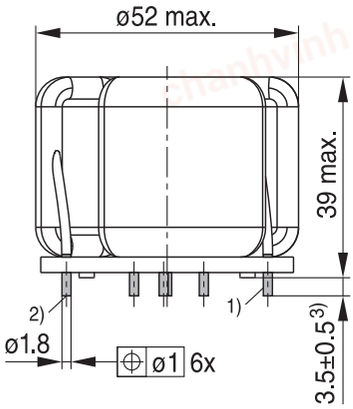

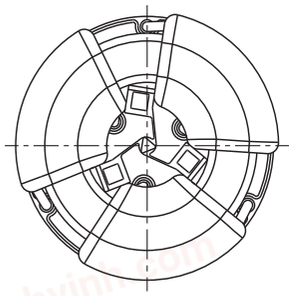

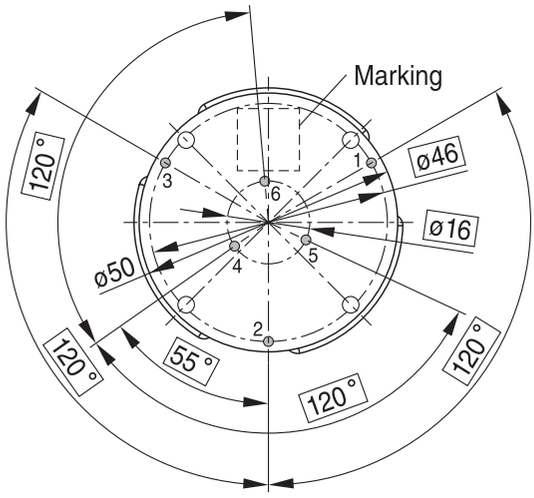

IND2333-4

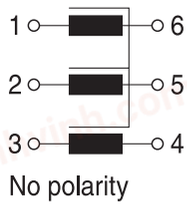

IND2296-3-E

1) Terminals solderable tinned with Sn
2) Tin tips permissible
3) Dimension does not include tin tip

IND2334-5-E

Figure 08 - B82745S6123N002

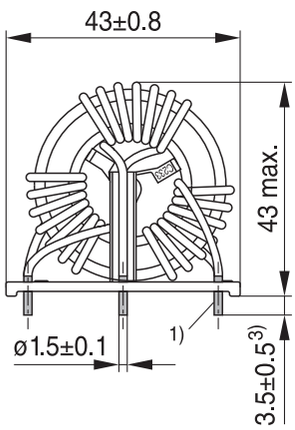

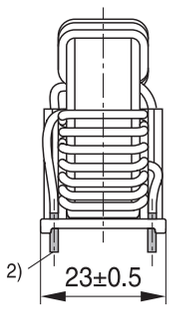

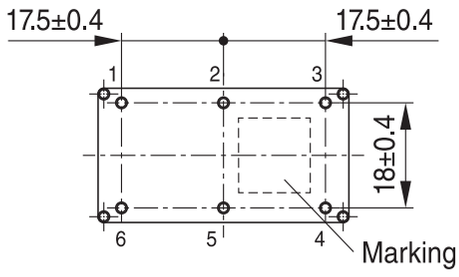

IND2319-Q-E

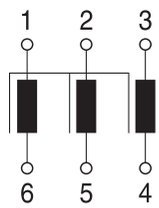

IND2298-5-E

1) Terminals solderable tinned with Sn
2) Tin tips permissible
3) Dimension does not include tin tip

IND2301-8-E

Tolerances to ISO 2768-c / ISO 8015.
Size ISO 14405 Ⓔ
All dimensions in mm
Dimensions without tolerance are typical values.

IND2603-Y-E

chanhvinh.com

Figure 09 - B82747S4163N030

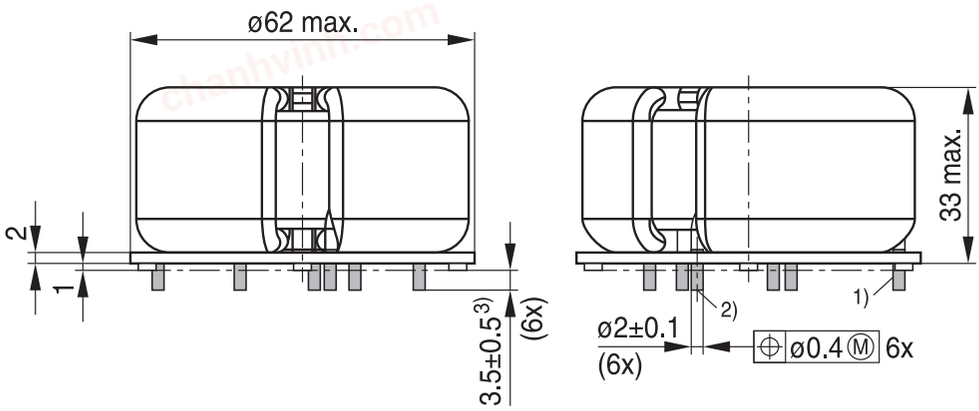

1) Terminals solderable tinned with Sn
2) Tin tips permissible
3) Tin tip is not part of this dimension

IND2356-H-E

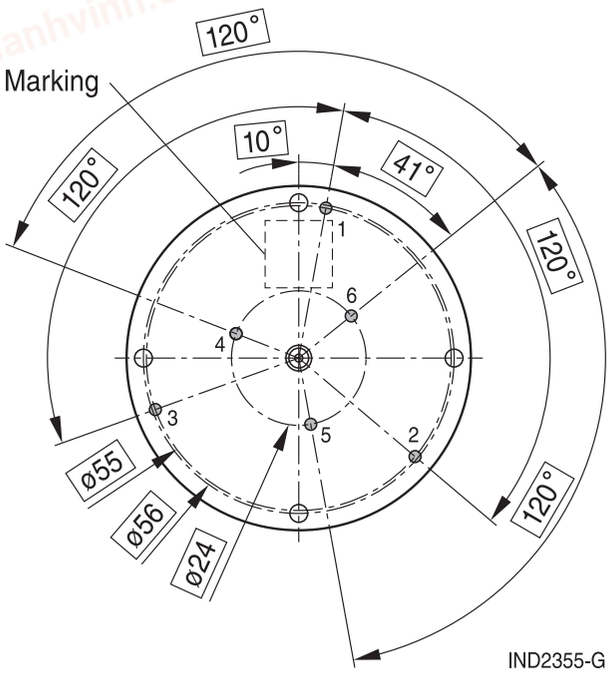

IND2355-G

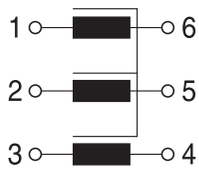

IND2296-3-E

Tolerances to ISO 2768-c / ISO 8015.
Size ISO 14405 Ⓔ
All dimensions in mm
Dimensions without tolerance are typical values.

IND2603-Y-E

chanhvinh.com

Figure 10 - B82745S4173N001

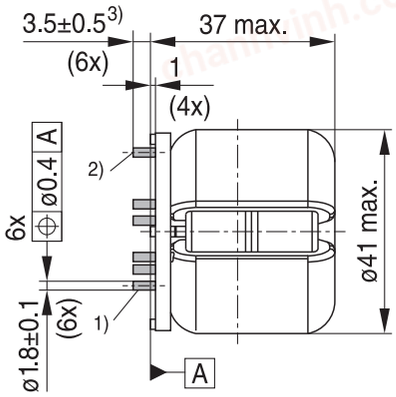

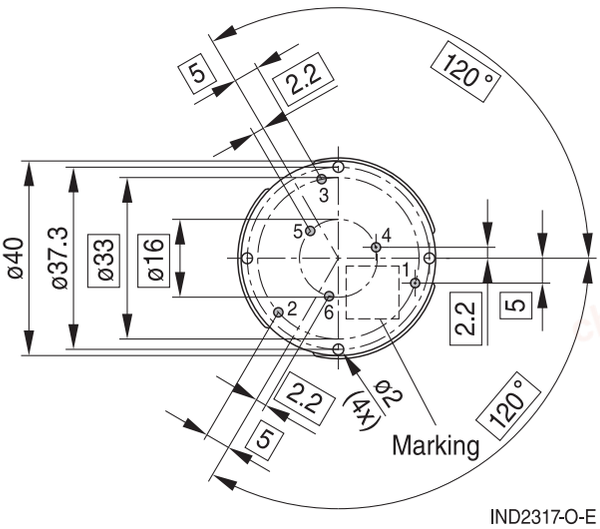

IND2317-O-E

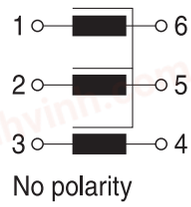

IND2296-3-E

1) Terminals solderable tinned with Sn
2) Tin tips permissible
3) Dimension does not include tin tip

IND2292-Z-E

Figure 11 - B82747S4183A020

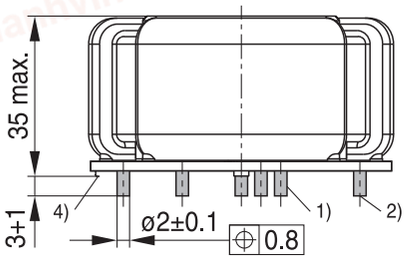

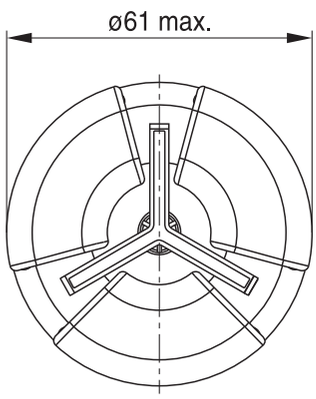

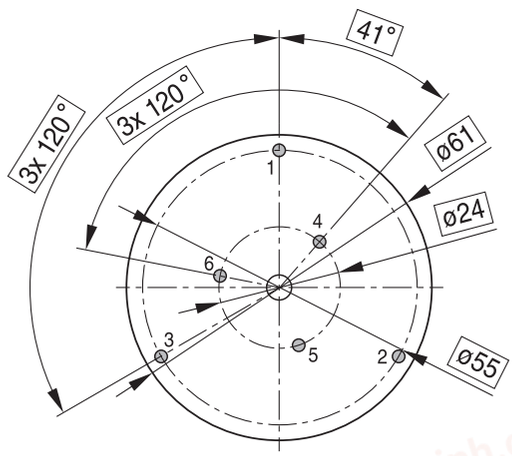

IND2369-V

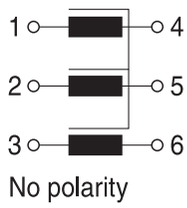

IND2300-7-E

1) Terminals solderable tinned with Sn
2) Tin tips permissible
3) Dimension does not include tin tip
4) Standoffs: 1 mm ref.

IND2604-Z-E

Tolerances to ISO 2768-c / ISO 8015.
Size ISO 14405 E
All dimensions in mm
Dimensions without tolerance are typical values.

IND2603-Y-E

chanhvinh.com

Figure 12 - B82747S4183N021

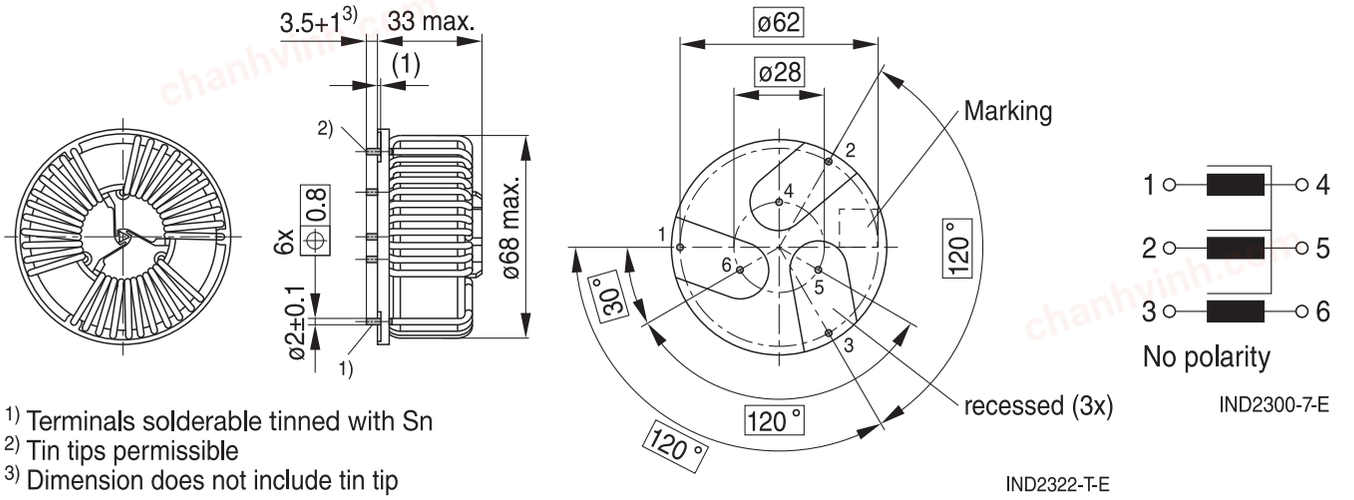

1) Terminals solderable tinned with Sn
2) Tin tips permissible
3) Dimension does not include tin tip

IND2304-B-E

Figure 13 - B82747S4183B040

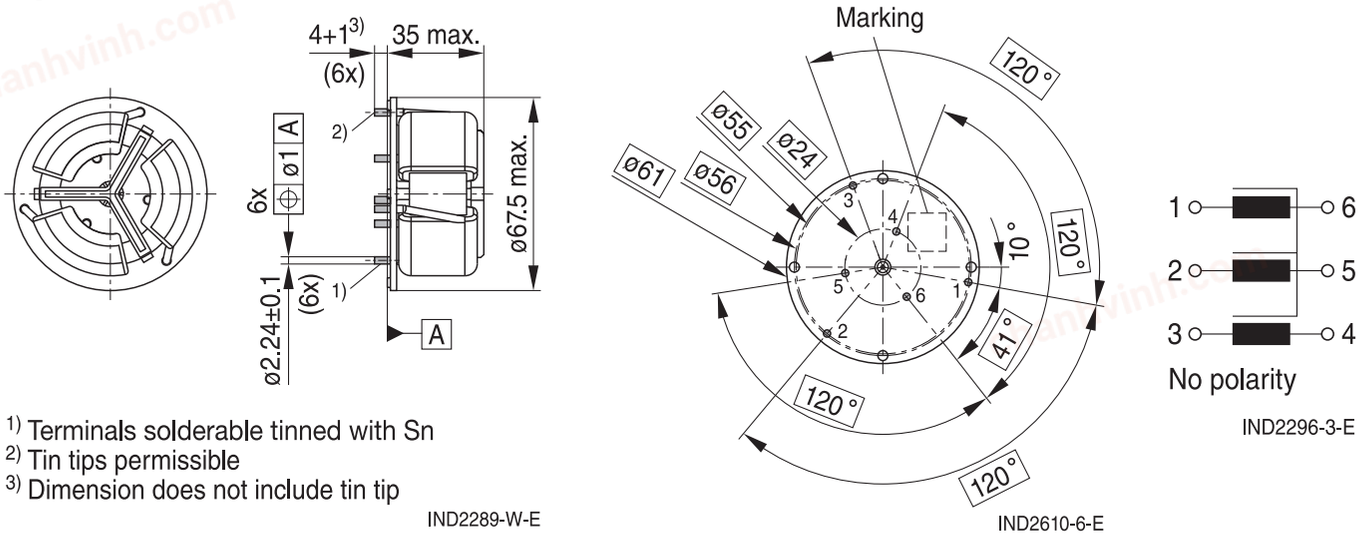

1) Terminals solderable tinned with Sn
2) Tin tips permissible
3) Dimension does not include tin tip

IND2289-W-E

Tolerances to ISO 2768-c / ISO 8015.
Size ISO 14405 (E)
All dimensions in mm
Dimensions without tolerance are typical values.

IND2603-Y-E

chanhvinh.com

Figure 14 - B82747S4203A020

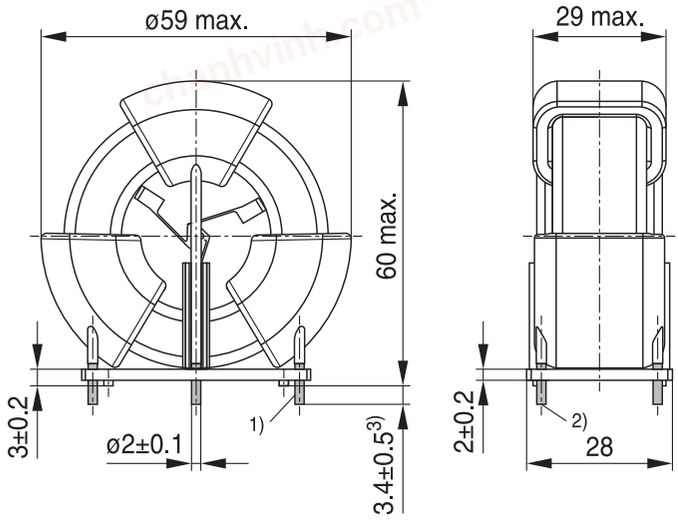

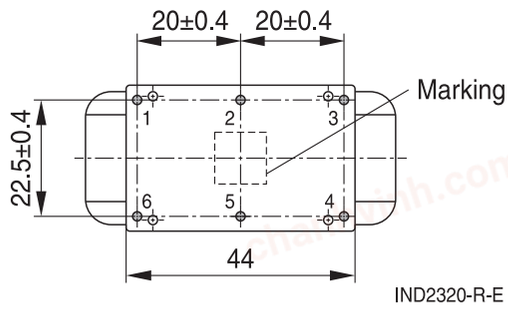

IND2320-R-E

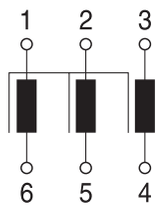

No polarity

IND2298-5-E

1) Terminals solderable tinned with Sn
2) Tin tips permissible
3) Dimension does not include tin tip

IND2302-9-E

Figure 15 - B82746S4203A020, B82746S4203A040

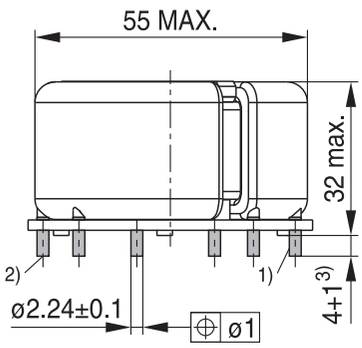

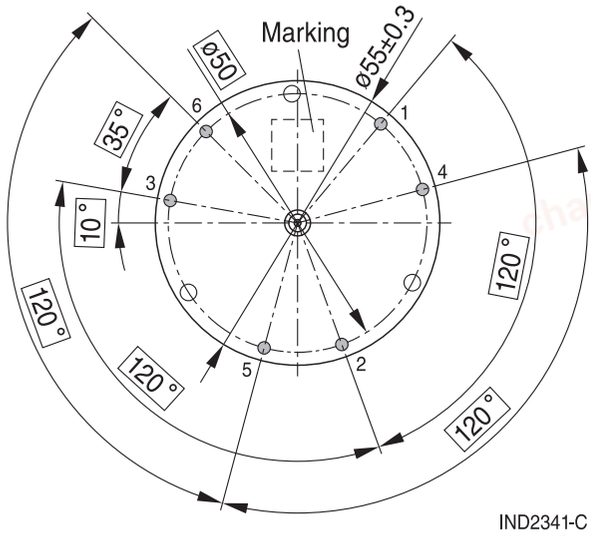

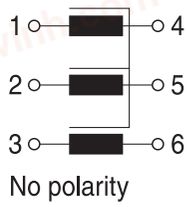

No polarity

IND2300-7-E

1) Terminals solderable tinned with Sn
2) Tin tips permissible
3) Dimension does not include tin tip

IND2342-D-E

IND2341-C

Tolerances to ISO 2768-c / ISO 8015.
Size ISO 14405 Ⓔ
All dimensions in mm
Dimensions without tolerance are typical values.

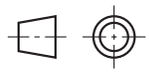

IND2603-Y-E

chanhvinh.com

Figure 16 - B82746S4233A040

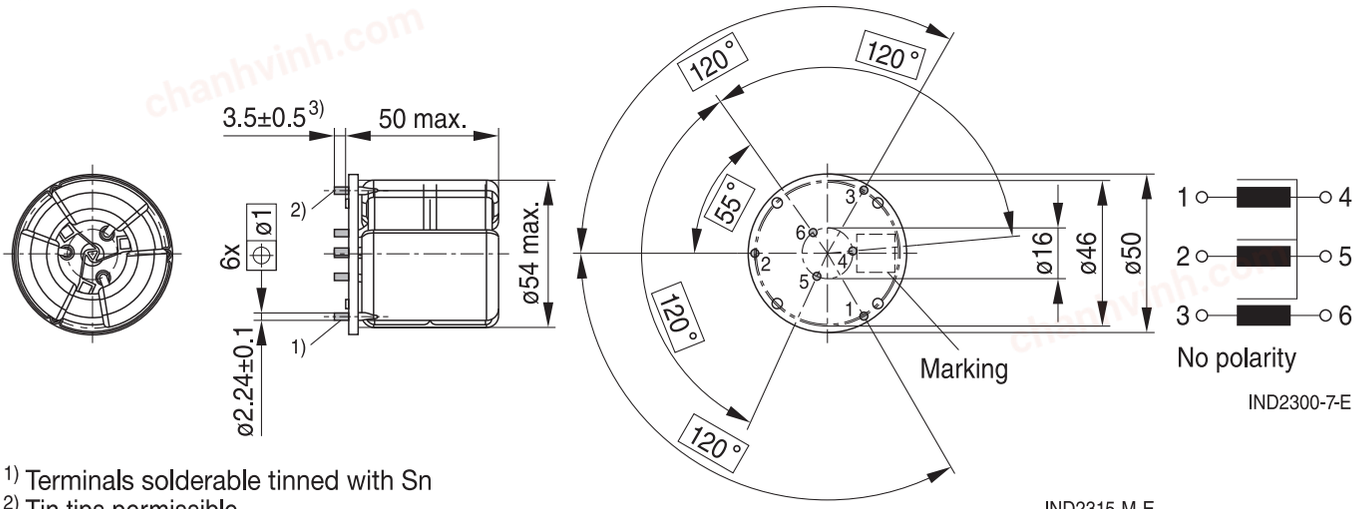

1) Terminals solderable tinned with Sn
2) Tin tips permissible
3) Dimension does not include tin tip

IND2290-X-E

Figure 17 - B82747S4253A040, B82747S4303A041

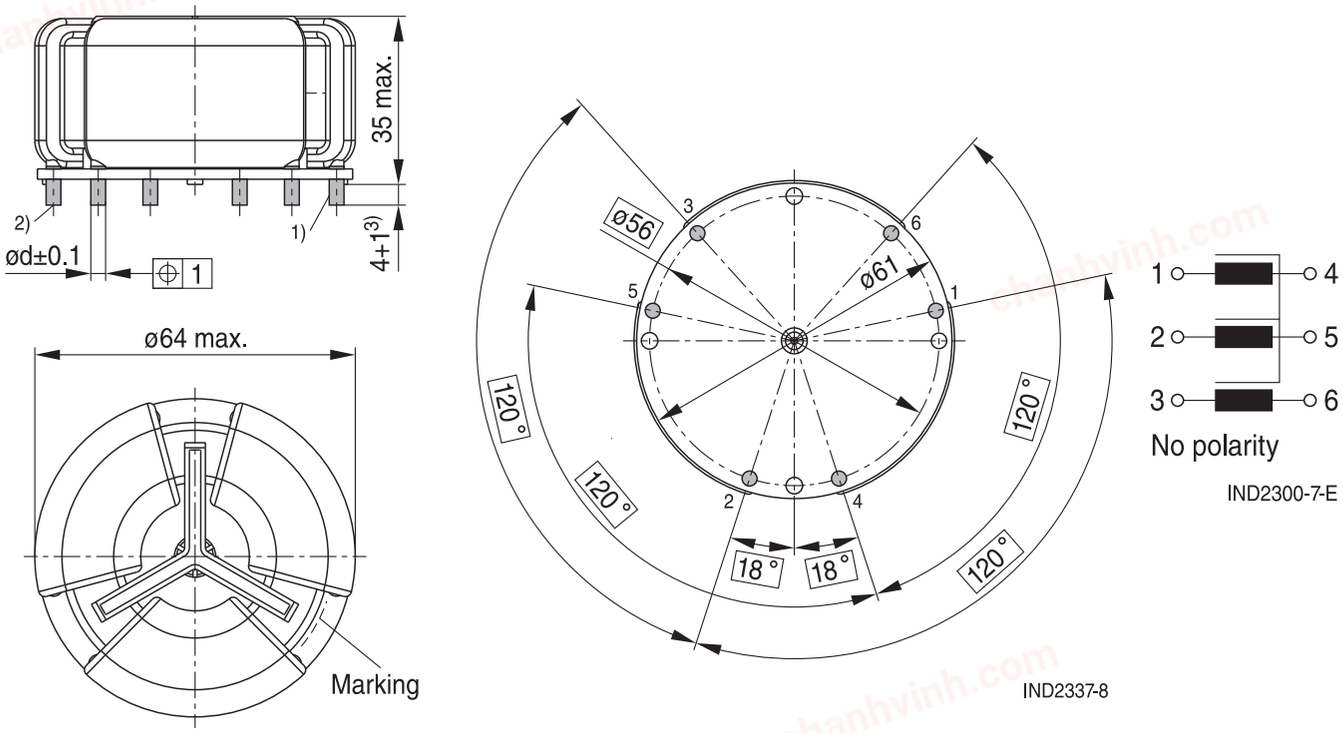

1) Terminals solderable tinned with Sn
2) Tin tips permissible
3) Dimension does not include tin tip

IND2338-9-E

Tolerances to ISO 2768-c / ISO 8015.
Size ISO 14405 Ⓔ
All dimensions in mm
Dimensions without tolerance are typical values.

IND2603-Y-E

chanhvinh.com

Figure 18 - B82747S6313N061

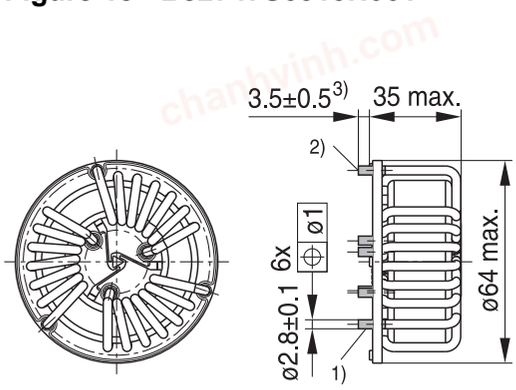

1) Terminals solderable tinned with Sn
2) Tin tips permissible
3) Dimension does not include tin tip

IND2303-A-E

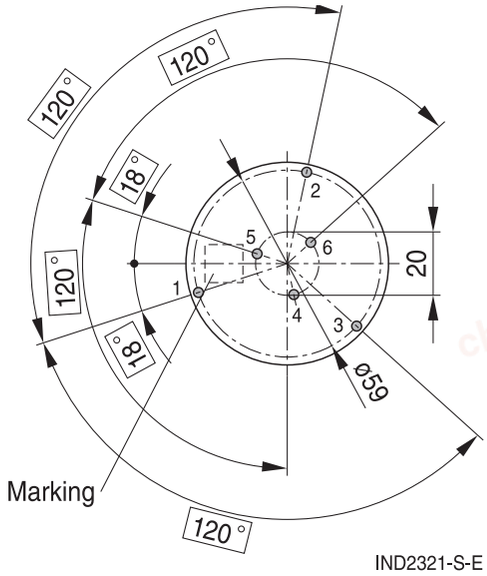

IND2321-S-E

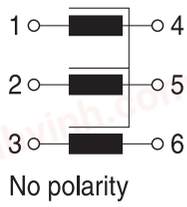

IND2300-7-E

Figure 19 - B82747S4423N020

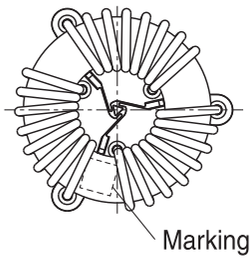

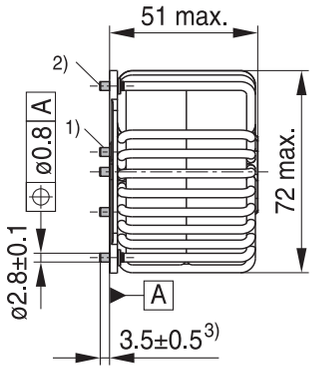

1) Terminals solderable tinned
2) Tin tip permissible
3) Tin tip is not a part of this dimension

IND2519-V-E

Tolerances of the wire position:
x-direction: ±0.4 (6x)
y-direction: ±0.4 (6x)

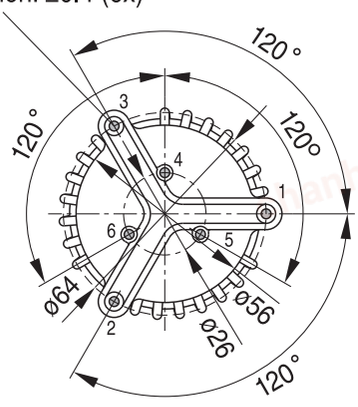

IND2323-U-E

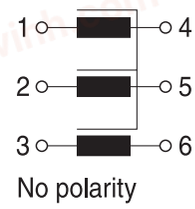

IND2300-7-E

Tolerances to ISO 2768-c / ISO 8015.
Size ISO 14405 (E)
All dimensions in mm
Dimensions without tolerance are typical values.

IND2603-Y-E

chanhvinh.com

Figure 20 - B82747S4453N001, B82747S4453N002

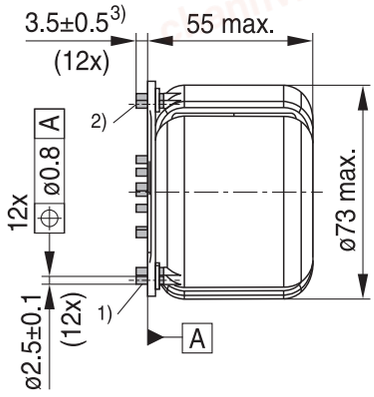

1) Terminals solderable tinned with Sn
2) Tin tips permissible
3) Dimension does not include tin tip

IND2288-V-E

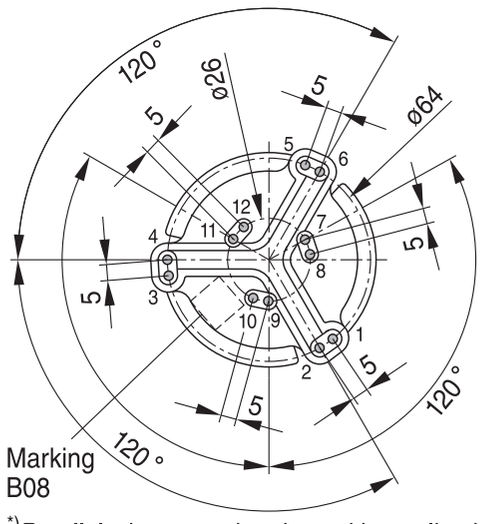

*) Parallel wires must be shorted in application: Pins 1–2, 3–4, 5–6, 7–8, 9–10 and 11–12 to be connected in customer application

IND2313-K-E

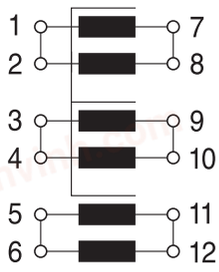

IND2602-X-E

Figure 21 - B82748S4503A020

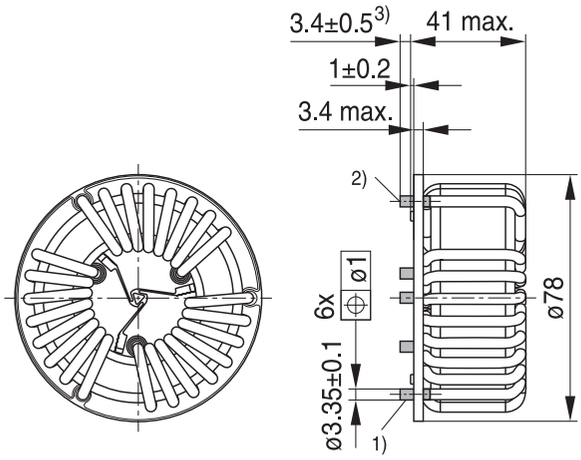

1) Terminals solderable tinned with Sn
2) Tin tips permissible
3) Dimension does not include tin tip

IND2287-U-E

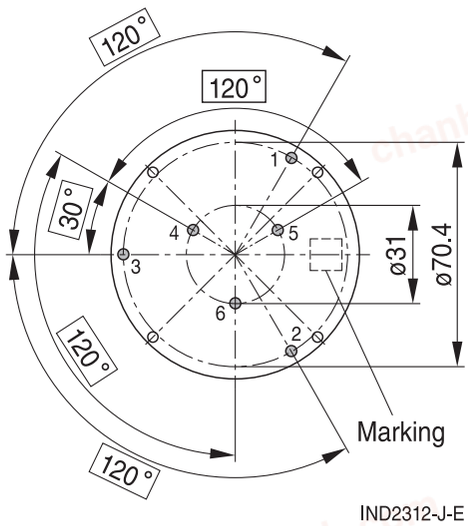

IND2312-J-E

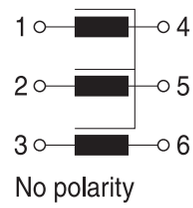

IND2300-7-E

Tolerances to ISO 2768-c / ISO 8015.
Size ISO 14405 (E)
All dimensions in mm
Dimensions without tolerance are typical values.

IND2603-Y-E

chanhvinh.com

Figure 22 - B82748S6623N030

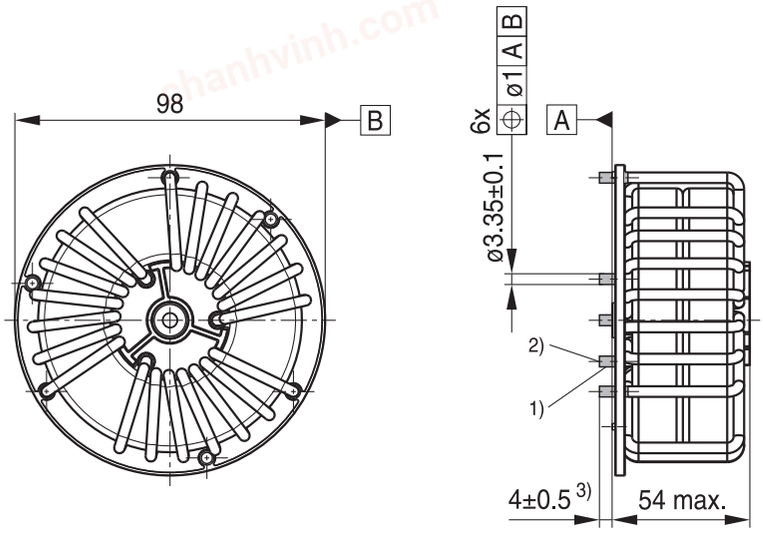

1) Terminals solderable tinned with Sn
2) Tin tips permissible
3) Dimension does not include tin tip

IND2340-B-E

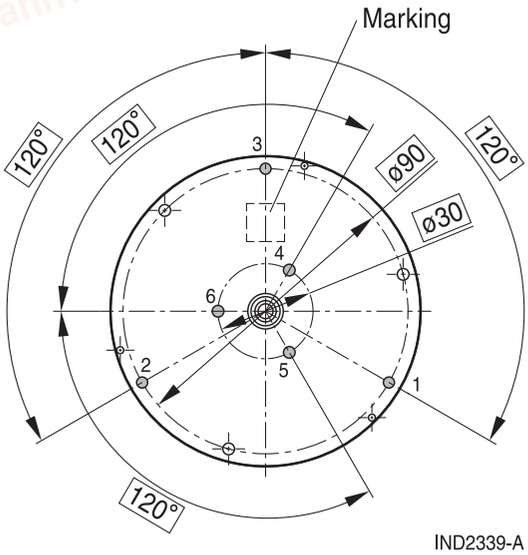

IND2339-A

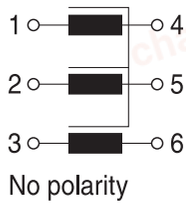

No polarity

IND2300-7-E

Tolerances to ISO 2768-c / ISO 8015.
Size ISO 14405 (E)
All dimensions in mm
Dimensions without
tolerance are typical values.

IND2603-Y-E

chanhvinh.com

Cautions and warnings

- Please note the recommendations in our Inductors data book (latest edition), online catalogs and in the data sheets.
  - Particular attention should be paid to the derating curves, if given. Derating applies in the case the ambient temperature in application exceeds the rated temperature of the component.
  - Ensure the operation temperature of the component in application not to exceed the maximum specified value or the upper climatic category temperature.
  - The soldering conditions should also be observed. Temperatures quoted in relation to wave soldering refer to the pins only. Temperatures specified in relation to reflow soldering can also refer to the pins or terminals for products with larger thermal mass, as in such cases, the temperature difference to the top of the component is too big (e.g., high proportion of core within the component).
- If the components are to be washed varnished it is necessary to check whether the washing varnish agent that is used has a negative effect on the wire insulation, any plastics that are used, or on glued joints. It is possible for washing varnish agent residues to have a negative effect in the long-term on wire insulation.
  Washing processes may damage the product due to the possible static or cyclic mechanical loads (e.g., ultrasonic cleaning). They may cause cracks to develop on the product and its parts, which might lead to reduced reliability or lifetime.
- The following points must be observed if the components are potted, sealed, or varnished in customer applications:
  - Many potting, sealing, or varnishing materials shrink as they harden. They therefore exert a pressure on the plastic housing or core. This pressure can have a deleterious effect on electrical properties, and in extreme cases can damage the core or plastic housing mechanically.
  - It is necessary to check whether the potting, sealing or varnishing materials used attack or destroy the wire insulation, plastics, or glue.
  - The effect of the potting, sealing, or varnishing materials may change the high-frequency behavior of the components.
- Magnetic core materials such as ferrites are sensitive to direct impact. This can cause the core material to flake or lead to breakage of the magnetic core material.
- Any type of tension or pressure on the product may result in damage and affect its functionality and reliability.
  - The products are only to be attached to fixings or mounting holes provided for this purpose in accordance with the data sheet.
  - If additional mechanical forces are applied to the component, e.g., application of gap pads, it is necessary to check whether they attack or destroy any part of the component.
  - It is not permitted for the product specified in the data sheet to assume a mechanical function in the final application.
- Inductance value can drop if external metallic or magnetic parts will be put close to the coil or into the air gap of the coil or core or magnetic material.
- Even for customer-specific products, conclusive validation of the component in the circuit can only be carried out by the customer.

Release 2024-08-08

chanhvinh.com

Display of ordering codes for TDK Electronics products

The ordering code for one and the same product can be represented differently in data sheets, data books, other publications, on the company website, or in order-related documents such as shipping notes, order confirmations and product labels. **The varying representations of the ordering codes are due to different processes employed and do not affect the specifications of the respective products.** Detailed information can be found on the Internet under www.tdk-electronics.tdk.com/orderingcodes.

chanhvinh.com

chanhvinh.com

Important notes

The following applies to all products named in this publication:

1 Some parts of this publication contain **statements about the suitability of our products for certain areas of application**. These statements are based on our knowledge of typical requirements that are often placed on our products in the areas of application concerned. We nevertheless expressly point out **that such statements cannot be regarded as binding statements about the suitability of our products for a particular customer application**. As a rule we are either unfamiliar with individual customer applications or less familiar with them than the customers themselves. For these reasons, it is always ultimately incumbent on the customer to check and decide whether a product with the properties described in the product specification is suitable for use in a particular customer application.

2 We also point out that **in individual cases, a malfunction of electronic components or failure before the end of their usual service life cannot be completely ruled out in the current state of the art, even if they are operated as specified**. In customer applications requiring a very high level of operational safety and especially in customer applications in which the malfunction or failure of an electronic component could endanger human life or health (e.g. in accident prevention or life-saving systems), it must therefore be ensured by means of suitable design of the customer application or other action taken by the customer (e.g. installation of protective circuitry or redundancy) that no injury or damage is sustained by third parties in the event of malfunction or failure of an electronic component.

3 **The warnings, cautions and product-specific notes must be observed**.

4 In order to satisfy certain technical requirements, **some of the products described in this publication may contain substances subject to restrictions in certain jurisdictions (e.g. because they are classed as hazardous)**. Useful information on this will be found in our Material Data Sheets on the Internet (www.tdk-electronics.tdk.com/material). Should you have any more detailed questions, please contact our sales offices.

5 We constantly strive to improve our products. Consequently, **the products described in this publication may change from time to time**. The same is true of the corresponding product specifications. Please check therefore to what extent product descriptions and specifications contained in this publication are still applicable before or when you place an order.
We also **reserve the right to discontinue production and delivery of products**. Consequently, we cannot guarantee that all products named in this publication will always be available. The aforementioned does not apply in the case of individual agreements deviating from the foregoing for customer-specific products.

6 Unless otherwise agreed in individual contracts, **all orders are subject to our General Terms and Conditions of Supply**.

7 **Our manufacturing sites serving the automotive business apply the IATF 16949 standard**. The IATF certifications confirm our compliance with requirements regarding the quality management system in the automotive industry. Referring to customer requirements and customer specific requirements (“CSR”) TDK always has and will continue to have the policy of respecting individual agreements. Even if IATF 16949 may appear to support the acceptance of unilateral requirements, we hereby like to emphasize that **only requirements mutually agreed upon can and will be implemented in our Quality Management System**. For clarification purposes we like to point out that obligations from IATF 16949 shall only become legally binding if individually agreed upon.

chanhvinh.com

Important notes

8 The trade names EPCOS, CarXield, CeraCharge, CeraDiode, CeraLink, CeraPad, CeraPlas, CSMP, CTVS, DeltaCap, DigiSiMic, FilterCap, FormFit, InsuGate, LeaXield, MediPlas, MiniBlue, MiniCell, MKD, MKK, ModCap, MotorCap, PCC, PhaseCap, PhaseCube, PhaseMod, PhiCap, PiezoBrush, PlasmaBrush, PowerHap, PQSine, PQvar, SIFERRIT, SIFI, SIKOREL, SilverCap, SIMDAD, SiMic, SIMID, SineFormer, SIOV, SurfIND, ThermoFuse, WindCap, XieldCap are **trademarks registered or pending** in Europe and in other countries. Further information will be found on the Internet at www.tdk-electronics.tdk.com/trademarks.

Release 2024-02

chanhvinh.com