chanhvinh.com

Ferrites and accessories

PQ 35/35DG
Core and accessories

Series/Type: **B65881Q, B65882B**

Date: October 2022

© TDK Electronics AG 2022. Reproduction, publication and dissemination of this publication, enclosures hereto and the information contained therein without TDK Electronics' prior express consent is prohibited.

chanhvinh.com

PQ 35/35DG

Core **B65881Q**

- Delivery mode: sets

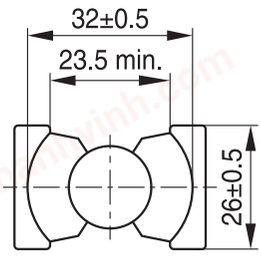

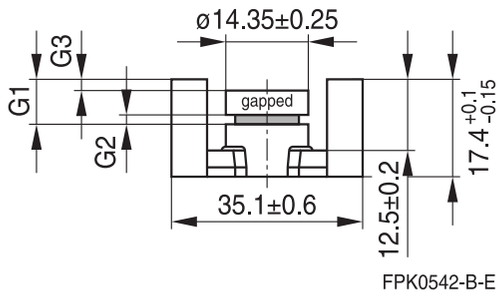

Magnetic characteristics (per set)

$\Sigma l/A$ = 0.47 mm^{-1}
l_e = 79.7 mm
A_e = 171 mm^2
A_{min} = 161 mm^2
V_e = 13650 mm^3

Approx. weight 75 g/set

Gapped

Material	A_L value nH	(G1) approx. mm	Air gap (G2) approx. mm	Air gap (G3) approx. mm	Ordering code
N95	100 ±10%	6.84	0.79	0.40	B65881Q0100K095
	150 ±10%	6.66	0.49	0.24	B65881Q0150K095
N97	100 ±10%	6.84	0.79	0.40	B65881Q0100K097
	150 ±10%	6.66	0.49	0.24	B65881Q0150K097

Other A_L values/air gaps and materials available on request – see Processing remarks on page 4.

chanhvinh.com

Coil former

Material: GFR polyamide PA6 (UL 94 V-0, insulation class to IEC 60085:
F = max. operating temperature 155 °C), color code black
Durethan BKV30FN04, [E245249 (M)], Lanxess AG
Solderability: to IEC 60068-2-20, test Ta, method 1 (aging 3): 235 °C, 2 s
Resistance to soldering heat: to IEC 60068-2-20, test Tb, method 1B: 350 °C, 3.5 s

Sections	A_N mm²	l_N mm	A_R value μΩ	Terminals	Ordering code
1	158	76	16.5	12	B65882B0012T001

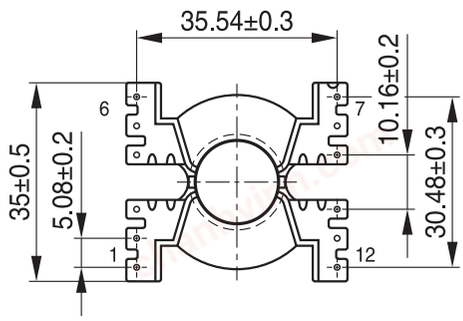

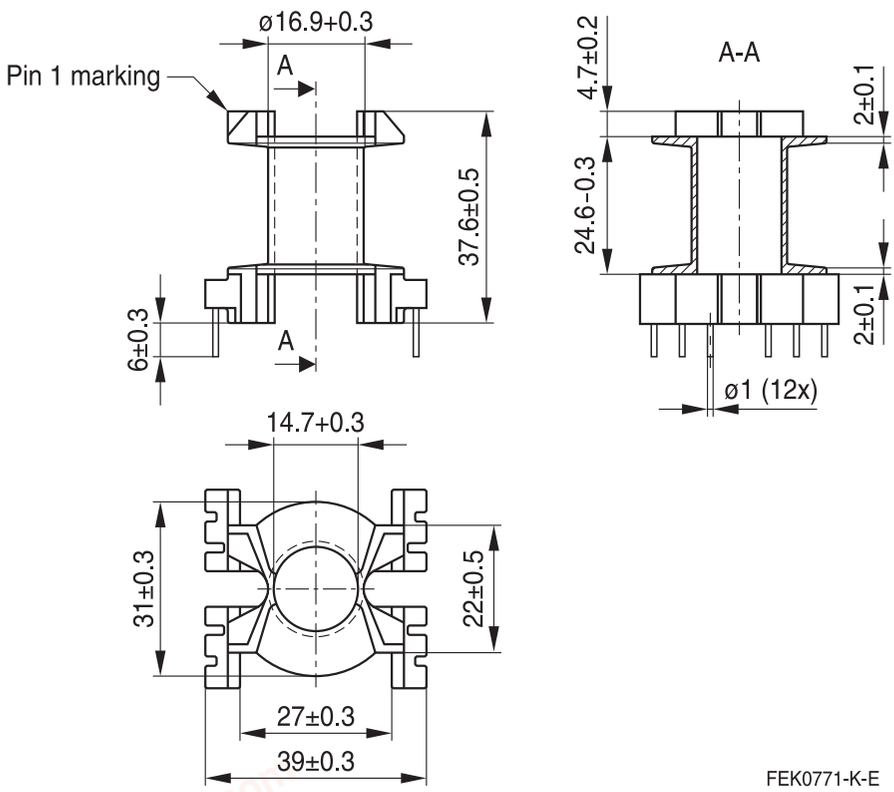

FEK0771-K-E

chanhvinh.com

Cautions and warnings

Mechanical stress and mounting

Ferrite cores have to meet mechanical requirements during assembling and for a growing number of applications. Since ferrites are ceramic materials one has to be aware of the special behavior under mechanical load.

As valid for any ceramic material, ferrite cores are brittle and sensitive to any shock, fast temperature changing or tensile load. Especially high cooling rates under ultrasonic cleaning and high static or cyclic loads can cause cracks or failure of the ferrite cores.

For detailed information see data book, chapter *“General - Definitions, 8.1”*.

Effects of core combination on A_L value

Stresses in the core affect not only the mechanical but also the magnetic properties. It is apparent that the initial permeability is dependent on the stress state of the core. The higher the stresses are in the core, the lower is the value for the initial permeability. Thus the embedding medium should have the greatest possible elasticity.

For detailed information see data book, chapter *“General - Definitions, 8.1”*.

Heating up

Ferrites can run hot during operation at higher flux densities and higher frequencies.

NiZn-materials

The magnetic properties of NiZn-materials can change irreversible in high magnetic fields.

Ferrite Accessories

Our ferrite accessories have been designed and evaluated only in combination with our ferrite cores. We explicitly point out that our ferrite accessories or our ferrite cores may not be compatible with those of other manufacturers. Any such combination requires prior testing by the customer and will be at the customer‘s own risk.

We assume no warranty or reliability for the combination of our ferrite accessories with cores and other accessories from any other manufacturer.

Processing remarks

The start of the winding process should be soft. Else the flanges may be destroyed.

- Too strong winding forces may blast the flanges or squeeze the tube that the cores can not be mounted any more.
- Too long soldering time at high temperature (>300 °C) may effect coplanarity or pin arrangement.
- Not following the processing notes for soldering of the J-leg terminals may cause solderability problems at the transformer because of pollution with Sn oxyde of the tin bath or burned insulation of the wire. For detailed information see chapter *“Processing notes”*, section 2.2.
- The dimensions of the hole arrangement have fixed values and should be understood as a recommendation for drilling the printed circuit board. For dimensioning the pins, the group of holes can only be seen under certain conditions, as they fit into the given hole arrangement. To avoid problems when mounting the transformer, the manufacturing tolerances for positioning the customers’ drilling process must be considered by increasing the hole diameter.

chanhvinh.com

Display of ordering codes for TDK Electronics products

The ordering code for one and the same product can be represented differently in data sheets, data books, other publications, on the company website or in order-related documents such as shipping notes, order confirmations and product labels. **The varying representations of the ordering codes are due to different processes employed and do not affect the specifications of the respective products**. Detailed information can be found on the Internet under www.tdk-electronics.tdk.com/orderingcodes.

chanhvinh.com

Symbols and terms

Symbol	Meaning	Unit
A	Cross section of coil	mm^2
A_e	Effective magnetic cross section	mm^2
A_L	Inductance factor; $A_L = L/N^2$	nH
A_{L1}	Minimum inductance at defined high saturation ($\triangleq \mu_a$)	nH
A_{min}	Minimum core cross section	mm^2
A_N	Winding cross section	mm^2
A_R	Resistance factor; $A_R = R_{Cu}/N^2$	$\mu\Omega = 10^{-6}\ \Omega$
B	RMS value of magnetic flux density	Vs/m^2, mT
ΔB	Flux density deviation	Vs/m^2, mT
$\hat{B}$	Peak value of magnetic flux density	Vs/m^2, mT
$\Delta\hat{B}$	Peak value of flux density deviation	Vs/m^2, mT
B_{DC}	DC magnetic flux density	Vs/m^2, mT
B_R	Remanent flux density	Vs/m^2, mT
B_S	Saturation magnetization	Vs/m^2, mT
C_0	Winding capacitance	F = As/V
CDF	Core distortion factor	$mm^{-4.5}$
DF	Relative disaccommodation coefficient DF = d/μ_i	
d	Disaccommodation coefficient	
E_a	Activation energy	J
f	Frequency	s^{-1}, Hz
f_{cutoff}	Cut-off frequency	s^{-1}, Hz
f_{max}	Upper frequency limit	s^{-1}, Hz
f_{min}	Lower frequency limit	s^{-1}, Hz
f_r	Resonance frequency	s^{-1}, Hz
f_{Cu}	Copper filling factor	
g	Air gap	mm
H	RMS value of magnetic field strength	A/m
$\hat{H}$	Peak value of magnetic field strength	A/m
H_{DC}	DC field strength	A/m
H_c	Coercive field strength	A/m
h	Hysteresis coefficient of material	10^{-6} cm/A
$h/\mu_i{}^2$	Relative hysteresis coefficient	10^{-6} cm/A
I	RMS value of current	A
I_{DC}	Direct current	A
$\hat{I}$	Peak value of current	A
J	Polarization	Vs/m^2
k	Boltzmann constant	J/K
k_3	Third harmonic distortion	
k_{3c}	Circuit third harmonic distortion	
L	Inductance	H = Vs/A

chanhvinh.com

Symbols and terms

Symbol	Meaning	Unit
$\Delta L/L$	Relative inductance change	H
L_0	Inductance of coil without core	H
L_H	Main inductance	H
L_p	Parallel inductance	H
L_{rev}	Reversible inductance	H
L_s	Series inductance	H
l_e	Effective magnetic path length	mm
l_N	Average length of turn	mm
N	Number of turns	
P_{Cu}	Copper (winding) losses	W
P_{trans}	Transferrable power	W
P_V	Relative core losses	mW/g
PF	Performance factor	
Q	Quality factor ($Q = \omega L/R_s = 1/\tan \delta_L$)	
R	Resistance	Ω
R_{Cu}	Copper (winding) resistance (f = 0)	Ω
R_h	Hysteresis loss resistance of a core	Ω
ΔR_h	R_h change	Ω
R_i	Internal resistance	Ω
R_p	Parallel loss resistance of a core	Ω
R_s	Series loss resistance of a core	Ω
R_{th}	Thermal resistance	K/W
R_V	Effective loss resistance of a core	Ω
s	Total air gap	mm
T	Temperature	°C
ΔT	Temperature difference	K
T_C	Curie temperature	°C
t	Time	s
t_v	Pulse duty factor	
$\tan \delta$	Loss factor	
$\tan \delta_L$	Loss factor of coil	
$\tan \delta_r$	(Residual) loss factor at $H \rightarrow 0$	
$\tan \delta_e$	Relative loss factor	
$\tan \delta_h$	Hysteresis loss factor	
$\tan \delta/\mu_i$	Relative loss factor of material at $H \rightarrow 0$	
U	RMS value of voltage	V
$\hat{U}$	Peak value of voltage	V
V_e	Effective magnetic volume	mm^3
Z	Complex impedance	Ω
Z_n	Normalized impedance $\lvert Z\rvert_n = \lvert Z\rvert / N^2 \times \varepsilon\ (l_e/A_e)$	Ω/mm

chanhvinh.com

Symbols and terms

Symbol	Meaning	Unit
α	Temperature coefficient (TK)	1/K
α_F	Relative temperature coefficient of material	1/K
α_e	Temperature coefficient of effective permeability	1/K
ε_r	Relative permittivity	
Φ	Magnetic flux	Vs
η	Efficiency of a transformer	
η_B	Hysteresis material constant	mT^{-1}
η_i	Hysteresis core constant	$A^{-1}H^{-1/2}$
λ_s	Magnetostriction at saturation magnetization	
μ	Relative complex permeability	
μ_0	Magnetic field constant	Vs/Am
μ_a	Relative amplitude permeability	
μ_{app}	Relative apparent permeability	
μ_e	Relative effective permeability	
μ_i	Relative initial permeability	
μ_p'	Relative real (inductive) component of $\underline{\mu}$ (for parallel components)	
μ_p''	Relative imaginary (loss) component of $\underline{\mu}$ (for parallel components)	
μ_r	Relative permeability	
μ_{rev}	Relative reversible permeability	
μ_s'	Relative real (inductive) component of $\underline{\mu}$ (for series components)	
μ_s''	Relative imaginary (loss) component of $\underline{\mu}$ (for series components)	
μ_{tot}	Relative total permeability derived from the static magnetization curve	
ρ	Resistivity	Ωm^{-1}
$\Sigma l/A$	Magnetic form factor	mm^{-1}
τ_{Cu}	DC time constant $\tau_{Cu} = L/R_{Cu} = A_L/A_R$	s
ω	Angular frequency; $\omega = 2\ \Pi f$	s^{-1}

All dimensions are given in mm.

SMD Surface-mount device

chanhvinh.com

Important notes

The following applies to all products named in this publication:

1. Some parts of this publication contain **statements about the suitability of our products for certain areas of application**. These statements are based on our knowledge of typical requirements that are often placed on our products in the areas of application concerned. We nevertheless expressly point out **that such statements cannot be regarded as binding statements about the suitability of our products for a particular customer application.** As a rule, we are either unfamiliar with individual customer applications or less familiar with them than the customers themselves. For these reasons, it is always ultimately incumbent on the customer to check and decide whether a product with the properties described in the product specification is suitable for use in a particular customer application.

2. We also point out that **in individual cases, a malfunction of electronic components or failure before the end of their usual service life cannot be completely ruled out in the current state of the art, even if they are operated as specified.** In customer applications requiring a very high level of operational safety and especially in customer applications in which the malfunction or failure of an electronic component could endanger human life or health (e.g. in accident prevention or life-saving systems), it must therefore be ensured by means of suitable design of the customer application or other action taken by the customer (e.g. installation of protective circuitry or redundancy) that no injury or damage is sustained by third parties in the event of malfunction or failure of an electronic component.

3. **The warnings, cautions and product-specific notes must be observed**.

4. In order to satisfy certain technical requirements, **some of the products described in this publication may contain substances subject to restrictions in certain jurisdictions (e.g. because they are classed as hazardous)**. Useful information on this will be found in our Material Data Sheets on the Internet (www.tdk-electronics.tdk.com/material). Should you have any more detailed questions, please contact our sales offices.

5. We constantly strive to improve our products. Consequently, **the products described in this publication may change from time to time**. The same is true of the corresponding product specifications. Please check therefore to what extent product descriptions and specifications contained in this publication are still applicable before or when you place an order.
   We also **reserve the right to discontinue production and delivery of products**. Consequently, we cannot guarantee that all products named in this publication will always be available. The aforementioned does not apply in the case of individual agreements deviating from the foregoing for customer-specific products.

6. Unless otherwise agreed in individual contracts, **all orders are subject to our General Terms and Conditions of Supply**.

chanhvinh.com

7. **Our manufacturing sites serving the automotive business apply the IATF 16949 standard**. The IATF certifications confirm our compliance with requirements regarding the quality management system in the automotive industry. Referring to customer requirements and customer specific requirements (“CSR”) TDK always has and will continue to have the policy of respecting individual agreements. Even if IATF 16949 may appear to support the acceptance of unilateral requirements, we hereby like to emphasize that **only requirements mutually agreed upon can and will be implemented in our Quality Management System.** For clarification purposes we like to point out that obligations from IATF 16949 shall only become legally binding if individually agreed upon.
8. The trade names EPCOS, CarXield, CeraCharge, CeraDiode, CeraLink, CeraPad, CeraPlas, CSMP, CTVS, DeltaCap, DigiSiMic, ExoCore, FilterCap, FormFit, InsuGate, LeaXield, MiniBlue, MiniCell, MKD, MKK, ModCap, MotorCap, PCC, PhaseCap, PhaseCube, PhaseMod, PhiCap, PowerHap, PQSine, PQvar, SIFERRIT, SIFI, SIKOREL, SilverCap, SIMDAD, SiMic, SIMID, SineFormer, SIOV, ThermoFuse, WindCap, XieldCap are **trademarks registered or pending** in Europe and in other countries. Further information will be found on the Internet at www.tdk-electronics.tdk.com/trademarks.

Release 2022-07