chanhvinh.com

Ferrites and accessories

RM 4, RM 4 LP
Core and accessories

Series/Type: **B65803, B65804, B65806, B65539**

Date: February 2023

© TDK Electronics AG 2023. Reproduction, publication and dissemination of this publication, enclosures hereto and the information contained therein without TDK Electronics' prior express consent is prohibited.

chanhvinh.com

RM 4

Core and accessories

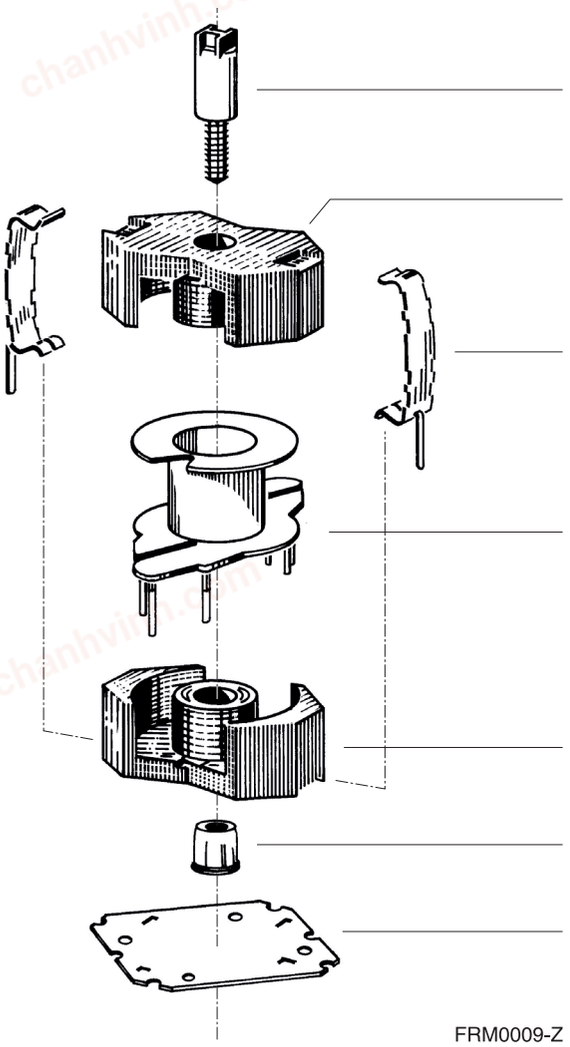

Individual parts	Part no.	Page
Adjusting screw	B65539 B65806	7
Core	B65803	3
Clamp	B65806	6
Coil former	B65804	5
Core	B65803	3
Threaded sleeve (glued-in)		
Insulating washer	B65804	6

Example of an assembly set

Also available:

<u>RM 4 low profile:</u>		
Core	B65803	8
Coil former	B65804	9
SMD coil former with J terminals	B65804	10
Clamp	B65804	11
Insulating washer	B65804	11

chanhvinh.com

RM 4

Core B65803

- To IEC 63093-4
- Core without center hole
  for transformer applications
- Delivery mode: sets

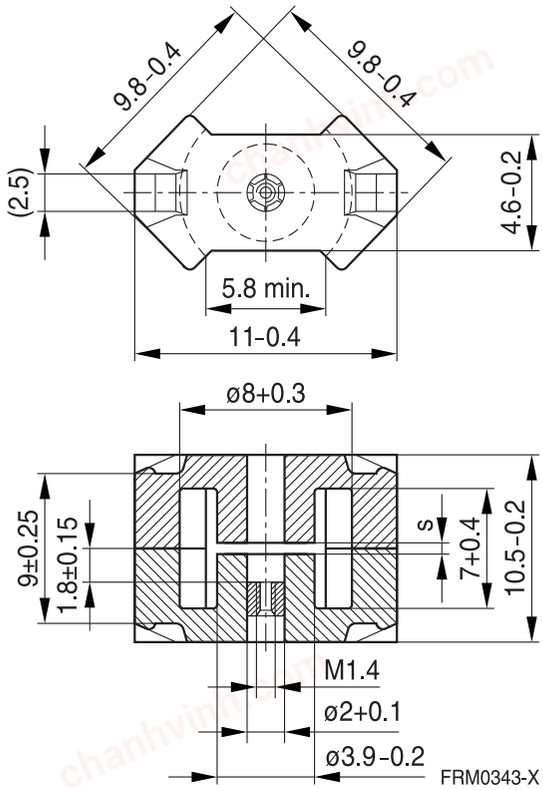

Magnetic characteristics (per set)

	with center hole	without center hole	
$\Sigma l/A$	1.9	1.7	mm^{-1}
l_e	21	22	mm
A_e	11	13	mm^2
A_{min}	—	11.3	mm^2
V_e	231	286	mm^3

Approx. weight (per set)

m	1.45	1.65	g

Gapped (A_L values/air gaps examples)

Material	A_L value nH	s approx. mm	μ_e	Ordering code[1)] -A with center hole -N with threaded sleeve
K1	16 ±3% 25 ±3%	1.0 0.40	24.2 37.8	B65803+0016A001 B65803+0025A001
M33	40 ±3% 63 ±3%	0.36 0.18	60.4 96	B65803+0040A033 B65803+0063A033
N48	63 ±3% 100 ±3% 160 ±3%	0.16 0.10 0.06	96 152 243	B65803+0063A048 B65803+0100A048 B65803+0160A048

1) Replace the + by the code letter “A” or “N” for the required version.

chanhvinh.com

RM 4

Core B65803

Ungapped

Material	A_L value nH	μ_e	P_V W/set	Ordering code -J without center hole
PC200	500 +30/–20%	670	< 0.12 (30 mT, 2000 kHz, 100 °C)	B65803J0000R608
N45	1700 +30/–20%	2290		B65803J0000R045
N30	1900 +30/–20%	2560		B65803J0000R030
T35	2800 +40/–30%	3770		B65803J0000Y035
T38	3700 +40/–30%	4980		B65803J0000Y038
N49	750 +30/–20%	1010	< 0.04 (50 mT, 500 kHz, 100 °C)	B65803J0000R049
N87	1100 +30/–20%	1480	< 0.20 (200 mT, 100 kHz, 100 °C)	B65803J0000R087
N97	1100 +30/–20%	1480	< 0.15 (200 mT, 100 kHz, 100 °C)	B65803J0000R097

Other A_L values/air gaps and materials available on request — see Processing remarks on page 12.

chanhvinh.com

Coil former

Material: GFR thermosetting plastic (UL 94 V-0, insulation class to IEC 60085: F ≙ max. operating temperature 155 °C), color code black
Sumikon PM 9630® [E41429 (M)], SUMIMOTO BAKELITE CO LTD
Solderability: to IEC 60068-2-20, test Ta, method 1 (aging 3): 235 °C, 2 s
Resistance to soldering heat: to IEC 60068-2-20, test Tb, method 1B: 350 °C, 3.5 s
Winding: see Processing notes, 2.1

For matching clamp and insulating washers see page 6.

Sections	A_N mm²	l_N mm	A_R value μΩ	Pins	Ordering code
1	7.7	20	89	5 6	B65804N1105D001 B65804N1106D001

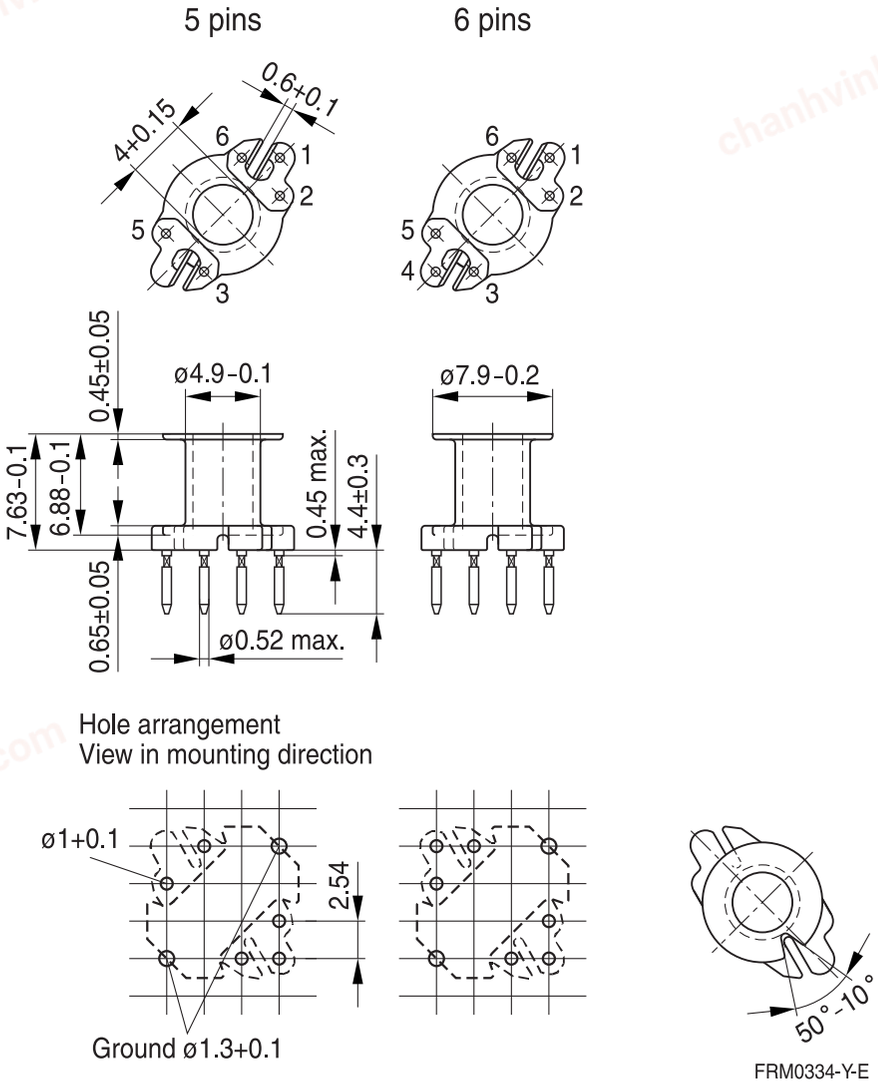

chanhvinh.com

Clamp

- With ground terminal, made of stainless spring steel (tinned), 0.3 mm thick
  Without ground terminal, made of stainless spring steel, 0.335 mm thick
- Solderability to IEC 60068-2-20, test Ta, method 1 (aging 3): 235 °C, 2 s

Insulating washer for double-clad PCBs

- Made of polyarylate film (UL 94 V-0, insulation class to IEC 60085: E ≙ 120 °C), 0.25 mm thick
  Makrofol FR7-2 [E168120 (M)], COVESTRO AG

	Ordering code
Clamp with ground terminal (ordering code per piece, 2 are required)	B65806B2203X000
Clamp without ground terminal (ordering code per piece, 2 are required)	B65806J2204X000
Insulating washer (bulk)	B65804C2005X000

Clamp with ground terminal

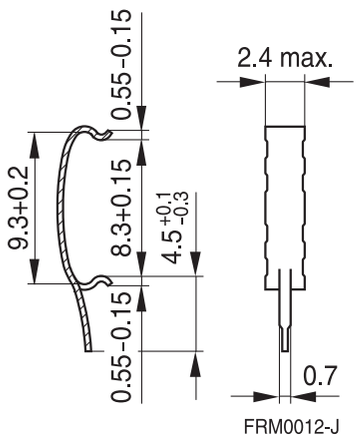

FRM0012-J

Clamp without ground terminal

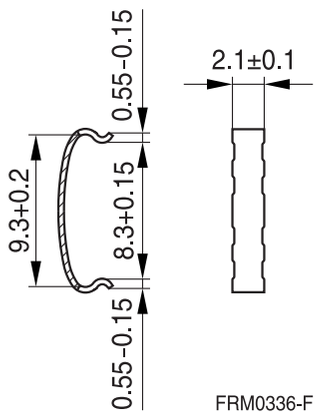

FRM0336-F

Insulating washer

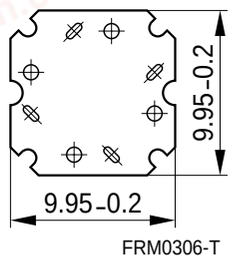

FRM0306-T

Clamping forces for RM 4

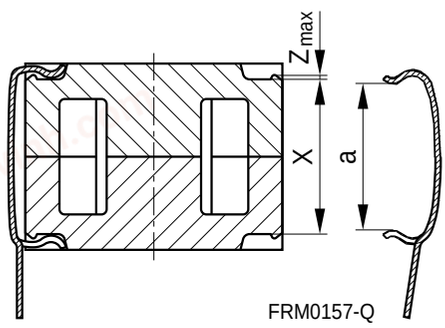

FRM0157-Q

F_{min}: Extension of clamp from a to $a_2 = X_{min}$
F_{max}: Extension of clamp from a to $a_1 = X_{max}$

Clamp opening a (mm)		8.3 +0.15
Core nose Z_{max} (mm)		0.15
Height of core pair X (mm)	X_{min}	8.75
	X_{max}	9.25
Clamping force F (N)	F_{min}	5
	F_{max}	40

chanhvinh.com

Adjusting screw

- Tube core with thread and core brake made of GFR polyterephthalate Pocan B3235® [E245249 (M)], LANXESS AG

Figure	Tube core ∅ × length (mm)	Material	Color code	Ordering code
a	1.81 × 2.0	K1	yellow	B65539C1003X001
a	1.81 × 2.7	N22	red	B65539C1002X022
b	1.81 × 3.4	N22	green	B65806C3001X022

a

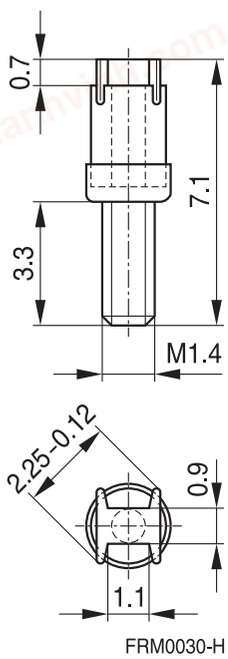

FRM0030-H

b

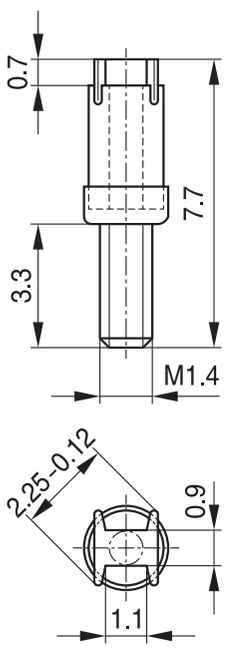

FRM0031-Q

chanhvinh.com

- To IEC 63093-4
- For compact transformers with high inductance
- Without center hole
- Delivery mode: sets

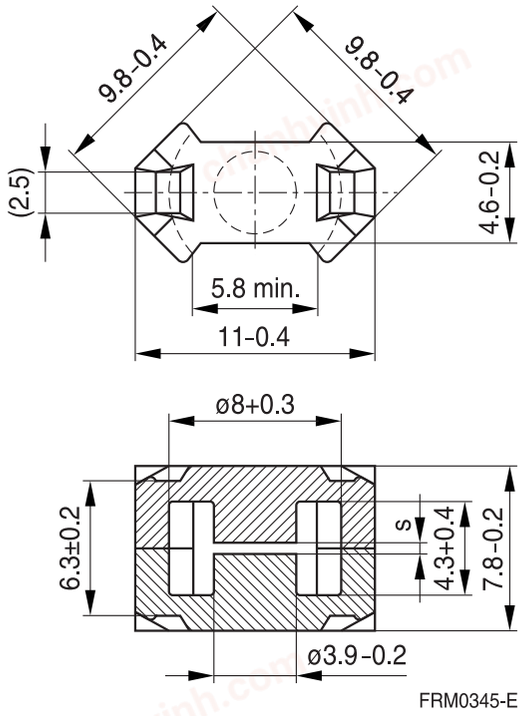

Magnetic characteristics (per set)

$\Sigma l/A$ = 1.2 mm^{-1}
l_e = 17.3 mm
A_e = 14.5 mm^2
A_{min} = 11.3 mm^2
V_e = 251 mm^3

Approx. weight 1.2 g/set

Ungapped

Material	A_L value nH	μ_e	P_V W/set	Ordering code
T38	5000 +40/–30%	4750		B65803P0000Y038
N49	950 +30/–20%	900	< 0.04 (50 mT, 500 kHz, 100 °C)	B65803P0000R049
N92	1000 +30/–20%	950	< 0.14 (200 mT, 100 kHz, 100 °C)	B65803P0000R092
N87	1300 +30/–20%	1230	< 0.12 (200 mT, 100 kHz, 100 °C)	B65803P0000R087

Other A_L values/air gaps and materials available on request – see Processing remarks on page 12.

chanhvinh.com

Coil former

Material: GFR thermosetting plastic (UL 94 V-0, insulation class to IEC 60085:
F ≙ max. operating temperature 155 °C), color code black
Sumikon PM 9630® [E41429 (M)], SUMIMOTO BAKELITE CO LTD
Solderability: to IEC 60068-2-58, test Ta, method 1 (aging 3): 235 °C, 2 s
Resistance to soldering heat: to IEC 60068-2-20, test Tb, method 1B: 350 °C, 2 s
permissible soldering temperature for wire-wrap connection on coil former: 400 °C, 1 s
Winding: see Processing notes, 2.1
For matching clamp and insulating washers, see page 11.

Sections	A_N mm²	l_N mm	A_R value μΩ	Terminals	Ordering code
1	4.7	20.1	147	6	B65804N1206D001

Coil former

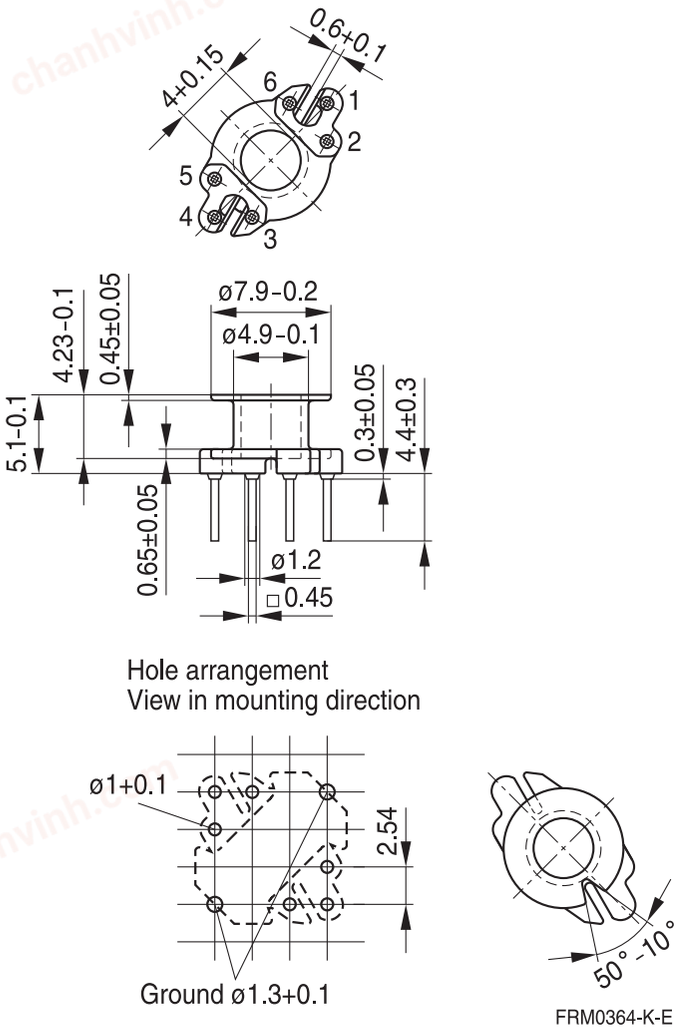

chanhvinh.com

SMD

SMD coil former with J terminals

Material: GFR liquid crystal polymer (UL 94 V-0, insulation class to IEC 60085:
F ≙ max. operating temperature 155 °C), color code black
Laperos E 130i [E106764 (M)], POLYPLASTICS CO LTD
Vectra E 130i [E83005 (M)], CELANESE INTERNATIONAL CORP.
Solderability: to IEC 60068-2-58, test Td, method 6 (Group 3): 245 °C, 3 s
Resistance to soldering heat: to IEC 60068-2-58, test Td, method 6 (Group 3): 255 °C, 10 s
permissible soldering temperature for wire-wrap connection on coil former: 400 °C, 1 s
Winding: see Processing notes, 2.1
For matching clamp, see page 11.

Sections	A_N mm²	l_N mm	A_R value μΩ	Terminals[1)]	Ordering code
1	5.0	20.1	138	10	B65804B6010T001
2	4.4	20.1	157	10	B65804B6010T002

Coil former

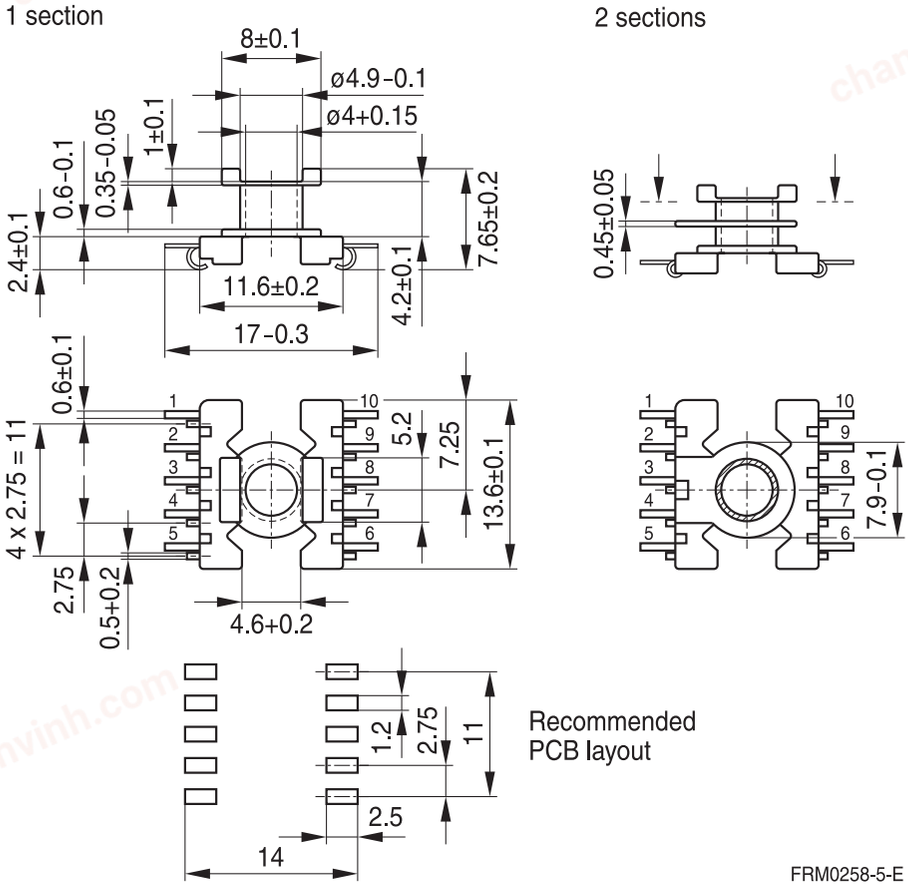

1) 6 and 8 terminals on request

chanhvinh.com

Clamp

- With ground terminal, made of stainless spring steel (tinned), 0.3 mm thick,
  Without ground terminal, made of stainless spring steel, 0.3 mm thick
- Solderability to IEC 60068-2-20, test Ta, method 1 (aging 3): 235 °C, 2 s

Insulating washer for double-clad PCBs

- Made of polyarylate film (UL 94 V-0, insulation class to IEC 60085: E ≙ 120 °C), 0.25 mm thick
  Makrofol FR7-2 [E168120 (M)], COVESTRO AG

	Ordering code
Clamp with ground terminal (ordering code per piece, 2 are required)	B65804P2203X000
Clamp without ground terminal (ordering code per piece, 2 are required)	B65804P2204X000
Insulating washer (bulk)	B65804C2005X000

Clamp with ground terminal

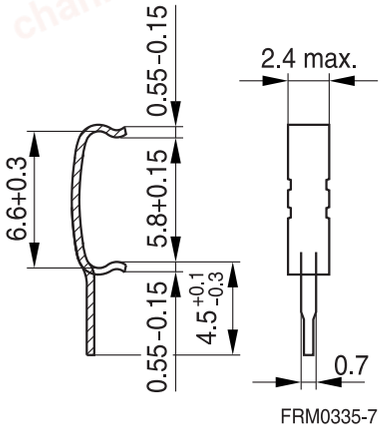

FRM0335-7

Clamp without ground terminal

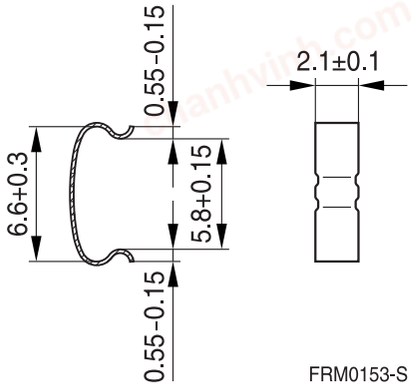

FRM0153-S

Insulating washer

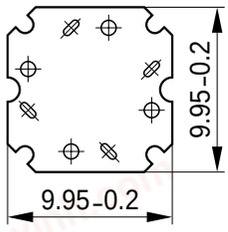

FRM0306-T

chanhvinh.com

Mechanical stress and mounting

Ferrite cores have to meet mechanical requirements during assembling and for a growing number of applications. Since ferrites are ceramic materials one has to be aware of the special behavior under mechanical load.

As valid for any ceramic material, ferrite cores are brittle and sensitive to any shock, fast temperature changing or tensile load. Especially high cooling rates under ultrasonic cleaning and high static or cyclic loads can cause cracks or failure of the ferrite cores.

For detailed information see data book, chapter *“General - Definitions, 8.1”*.

Effects of core combination on A_L value

Stresses in the core affect not only the mechanical but also the magnetic properties. It is apparent that the initial permeability is dependent on the stress state of the core. The higher the stresses are in the core, the lower is the value for the initial permeability. Thus the embedding medium should have the greatest possible elasticity.

For detailed information see data book, chapter *“General - Definitions, 8.1”*.

Heating up

Ferrites can run hot during operation at higher flux densities and higher frequencies.

NiZn-materials

The magnetic properties of NiZn-materials can change irreversible in high magnetic fields.

Ferrite Accessories

Our ferrite accessories have been designed and evaluated only in combination with our ferrite cores. We explicitly point out that our ferrite accessories or our ferrite cores may not be compatible with those of other manufacturers. Any such combination requires prior testing by the customer and will be at the customer‘s own risk.

We assume no warranty or reliability for the combination of our ferrite accessories with cores and other accessories from any other manufacturer.

Processing remarks

The start of the winding process should be soft. Else the flanges may be destroyed.

- Too strong winding forces may blast the flanges or squeeze the tube that the cores can not be mounted any more.
- Too long soldering time at high temperature (>300 °C) may effect coplanarity or pin arrangement.
- Not following the processing notes for soldering of the J-leg terminals may cause solderability problems at the transformer because of pollution with Sn oxyde of the tin bath or burned insulation of the wire. For detailed information see chapter *“Processing notes”*, section 2.2.
- The dimensions of the hole arrangement have fixed values and should be understood as a recommendation for drilling the printed circuit board. For dimensioning the pins, the group of holes can only be seen under certain conditions, as they fit into the given hole arrangement. To avoid problems when mounting the transformer, the manufacturing tolerances for positioning the customers’ drilling process must be considered by increasing the hole diameter.

chanhvinh.com

Display of ordering codes for TDK Electronics products

The ordering code for one and the same product can be represented differently in data sheets, data books, other publications, on the company website or in order-related documents such as shipping notes, order confirmations and product labels. **The varying representations of the ordering codes are due to different processes employed and do not affect the specifications of the respective products**. Detailed information can be found on the Internet under www.tdk-electronics.tdk.com/orderingcodes.

chanhvinh.com

Symbols and terms

Symbol	Meaning	Unit
A	Cross section of coil	mm^2
A_e	Effective magnetic cross section	mm^2
A_L	Inductance factor; $A_L = L/N^2$	nH
A_{L1}	Minimum inductance at defined high saturation ($\triangleq \mu_a$)	nH
A_{min}	Minimum core cross section	mm^2
A_N	Winding cross section	mm^2
A_R	Resistance factor; $A_R = R_{Cu}/N^2$	$\mu\Omega = 10^{-6}\ \Omega$
B	RMS value of magnetic flux density	Vs/m^2, mT
ΔB	Flux density deviation	Vs/m^2, mT
$\hat{B}$	Peak value of magnetic flux density	Vs/m^2, mT
$\Delta\hat{B}$	Peak value of flux density deviation	Vs/m^2, mT
B_{DC}	DC magnetic flux density	Vs/m^2, mT
B_R	Remanent flux density	Vs/m^2, mT
B_S	Saturation magnetization	Vs/m^2, mT
C_0	Winding capacitance	F = As/V
CDF	Core distortion factor	$mm^{-4.5}$
DF	Relative disaccommodation coefficient $DF = d/\mu_i$	
d	Disaccommodation coefficient	
E_a	Activation energy	J
f	Frequency	s^{-1}, Hz
f_{cutoff}	Cut-off frequency	s^{-1}, Hz
f_{max}	Upper frequency limit	s^{-1}, Hz
f_{min}	Lower frequency limit	s^{-1}, Hz
f_r	Resonance frequency	s^{-1}, Hz
f_{Cu}	Copper filling factor	
g	Air gap	mm
H	RMS value of magnetic field strength	A/m
$\hat{H}$	Peak value of magnetic field strength	A/m
H_{DC}	DC field strength	A/m
H_c	Coercive field strength	A/m
h	Hysteresis coefficient of material	10^{-6} cm/A
h/μ_i^2	Relative hysteresis coefficient	10^{-6} cm/A
I	RMS value of current	A
I_{DC}	Direct current	A
$\hat{I}$	Peak value of current	A
J	Polarization	Vs/m^2
k	Boltzmann constant	J/K
k_3	Third harmonic distortion	
k_{3c}	Circuit third harmonic distortion	
L	Inductance	H = Vs/A

chanhvinh.com

Symbols and terms

Symbol	Meaning	Unit
$\Delta L/L$	Relative inductance change	H
L_0	Inductance of coil without core	H
L_H	Main inductance	H
L_p	Parallel inductance	H
L_{rev}	Reversible inductance	H
L_s	Series inductance	H
l_e	Effective magnetic path length	mm
l_N	Average length of turn	mm
N	Number of turns	
P_{Cu}	Copper (winding) losses	W
P_{trans}	Transferrable power	W
P_V	Relative core losses	mW/g
PF	Performance factor	
Q	Quality factor ($Q = \omega L/R_s = 1/\tan \delta_L$)	
R	Resistance	Ω
R_{Cu}	Copper (winding) resistance (f = 0)	Ω
R_h	Hysteresis loss resistance of a core	Ω
ΔR_h	R_h change	Ω
R_i	Internal resistance	Ω
R_p	Parallel loss resistance of a core	Ω
R_s	Series loss resistance of a core	Ω
R_{th}	Thermal resistance	K/W
R_V	Effective loss resistance of a core	Ω
s	Total air gap	mm
T	Temperature	°C
ΔT	Temperature difference	K
T_C	Curie temperature	°C
t	Time	s
t_v	Pulse duty factor	
$\tan \delta$	Loss factor	
$\tan \delta_L$	Loss factor of coil	
$\tan \delta_r$	(Residual) loss factor at $H \rightarrow 0$	
$\tan \delta_e$	Relative loss factor	
$\tan \delta_h$	Hysteresis loss factor	
$\tan \delta/\mu_i$	Relative loss factor of material at $H \rightarrow 0$	
U	RMS value of voltage	V
$\hat{U}$	Peak value of voltage	V
V_e	Effective magnetic volume	mm^3
Z	Complex impedance	Ω
Z_n	Normalized impedance $\lvert Z\rvert_n = \lvert Z\rvert / N^2 \times \varepsilon\ (l_e/A_e)$	Ω/mm

chanhvinh.com

Symbols and terms

Symbol	Meaning	Unit
α	Temperature coefficient (TK)	1/K
α_F	Relative temperature coefficient of material	1/K
α_e	Temperature coefficient of effective permeability	1/K
ε_r	Relative permittivity	
Φ	Magnetic flux	Vs
η	Efficiency of a transformer	
η_B	Hysteresis material constant	mT^{-1}
η_i	Hysteresis core constant	$A^{-1}H^{-1/2}$
λ_s	Magnetostriction at saturation magnetization	
μ	Relative complex permeability	
μ_0	Magnetic field constant	Vs/Am
μ_a	Relative amplitude permeability	
μ_{app}	Relative apparent permeability	
μ_e	Relative effective permeability	
μ_i	Relative initial permeability	
μ_p'	Relative real (inductive) component of $\underline{\mu}$ (for parallel components)	
μ_p''	Relative imaginary (loss) component of $\underline{\mu}$ (for parallel components)	
μ_r	Relative permeability	
μ_{rev}	Relative reversible permeability	
μ_s'	Relative real (inductive) component of $\underline{\mu}$ (for series components)	
μ_s''	Relative imaginary (loss) component of $\underline{\mu}$ (for series components)	
μ_{tot}	Relative total permeability derived from the static magnetization curve	
ρ	Resistivity	Ωm^{-1}
$\Sigma l/A$	Magnetic form factor	mm^{-1}
τ_{Cu}	DC time constant $\tau_{Cu} = L/R_{Cu} = A_L/A_R$	s
ω	Angular frequency; $\omega = 2\ \Pi f$	s^{-1}

All dimensions are given in mm.

SMD Surface-mount device

chanhvinh.com

Important notes

The following applies to all products named in this publication:

1. Some parts of this publication contain **statements about the suitability of our products for certain areas of application**. These statements are based on our knowledge of typical requirements that are often placed on our products in the areas of application concerned. We nevertheless expressly point out **that such statements cannot be regarded as binding statements about the suitability of our products for a particular customer application.** As a rule, we are either unfamiliar with individual customer applications or less familiar with them than the customers themselves. For these reasons, it is always ultimately incumbent on the customer to check and decide whether a product with the properties described in the product specification is suitable for use in a particular customer application.

2. We also point out that **in individual cases, a malfunction of electronic components or failure before the end of their usual service life cannot be completely ruled out in the current state of the art, even if they are operated as specified.** In customer applications requiring a very high level of operational safety and especially in customer applications in which the malfunction or failure of an electronic component could endanger human life or health (e.g. in accident prevention or life-saving systems), it must therefore be ensured by means of suitable design of the customer application or other action taken by the customer (e.g. installation of protective circuitry or redundancy) that no injury or damage is sustained by third parties in the event of malfunction or failure of an electronic component.

3. **The warnings, cautions and product-specific notes must be observed**.

4. In order to satisfy certain technical requirements, **some of the products described in this publication may contain substances subject to restrictions in certain jurisdictions (e.g. because they are classed as hazardous)**. Useful information on this will be found in our Material Data Sheets on the Internet (www.tdk-electronics.tdk.com/material). Should you have any more detailed questions, please contact our sales offices.

5. We constantly strive to improve our products. Consequently, **the products described in this publication may change from time to time**. The same is true of the corresponding product specifications. Please check therefore to what extent product descriptions and specifications contained in this publication are still applicable before or when you place an order.
   We also **reserve the right to discontinue production and delivery of products**. Consequently, we cannot guarantee that all products named in this publication will always be available. The aforementioned does not apply in the case of individual agreements deviating from the foregoing for customer-specific products.

6. Unless otherwise agreed in individual contracts, **all orders are subject to our General Terms and Conditions of Supply**.

chanhvinh.com

Important notes

7. **Our manufacturing sites serving the automotive business apply the IATF 16949 standard**. The IATF certifications confirm our compliance with requirements regarding the quality management system in the automotive industry. Referring to customer requirements and customer specific requirements (“CSR”) TDK always has and will continue to have the policy of respecting individual agreements. Even if IATF 16949 may appear to support the acceptance of unilateral requirements, we hereby like to emphasize that **only requirements mutually agreed upon can and will be implemented in our Quality Management System.** For clarification purposes we like to point out that obligations from IATF 16949 shall only become legally binding if individually agreed upon.
8. The trade names EPCOS, CarXield, CeraCharge, CeraDiode, CeraLink, CeraPad, CeraPlas, CSMP, CTVS, DeltaCap, DigiSiMic, ExoCore, FilterCap, FormFit, InsuGate, LeaXield, MiniBlue, MiniCell, MKD, MKK, ModCap, MotorCap, PCC, PhaseCap, PhaseCube, PhaseMod, PhiCap, PowerHap, PQSine, PQvar, SIFERRIT, SIFI, SIKOREL, SilverCap, SIMDAD, SiMic, SIMID, SineFormer, SIOV, ThermoFuse, WindCap, XieldCap are **trademarks registered or pending** in Europe and in other countries. Further information will be found on the Internet at www.tdk-electronics.tdk.com/trademarks.

Release 2022-07