chanhvinh.com

Aluminum electrolytic capacitors, Aluminum electrolytic capacitors – single-ended capacitors

Series/Type: B41858

The following products presented in this data sheet are being withdrawn.

Ordering Code	Substitute Product	Date of Withdrawal	Deadline Last Orders	Last Shipments
B41858C3337M000		2018-06-22	2018-09-30	2018-12-31
B41858C3337M006		2018-06-22	2018-09-30	2018-12-31
B41858C3337M008		2023-06-09	2023-11-30	2024-02-29

chanhvinh.com

Ordering Code	Substitute Product	Date of Withdrawal	Deadline Last Orders	Last Shipments
B41858C3397M000		2023-06-09	2023-11-30	2024-02-29
B41858C3397M006		2023-06-09	2023-11-30	2024-02-29
B41858C3397M008		2018-06-22	2018-09-30	2018-12-31
B41858C3477M000		2023-06-09	2023-11-30	2024-02-29
B41858C3477M006		2023-06-09	2023-11-30	2024-02-29
B41858C3477M008		2023-06-09	2023-11-30	2024-02-29
B41858C6107M000		2023-06-09	2023-11-30	2024-02-29
B41858C6107M006		2023-06-09	2023-11-30	2024-02-29
B41858C6107M008		2023-06-09	2023-11-30	2024-02-29
B41858C7107M000		2023-06-09	2023-11-30	2024-02-29
B41858C7107M006		2023-06-09	2023-11-30	2024-02-29
B41858C7107M008		2023-06-09	2023-11-30	2024-02-29
B41858C7157M000		2023-06-09	2023-11-30	2024-02-29
B41858C7157M006		2023-06-09	2023-11-30	2024-02-29
B41858C7157M008		2023-06-09	2023-11-30	2024-02-29
B41858C9226M000		2023-06-09	2023-11-30	2024-02-29
B41858C9226M006		2023-06-09	2023-11-30	2024-02-29
B41858C9226M008		2023-06-09	2023-11-30	2024-02-29
B41858D4277M000		2023-06-09	2023-11-30	2024-02-29
B41858D4277M006		2023-06-09	2023-11-30	2024-02-29
B41858D4277M008		2023-06-09	2023-11-30	2024-02-29
B41858D4337M000		2023-06-09	2023-11-30	2024-02-29
B41858D4337M006		2023-06-09	2023-11-30	2024-02-29
B41858D4337M008		2023-06-09	2023-11-30	2024-02-29
B41858D5187M000		2023-06-09	2023-11-30	2024-02-29
B41858D5187M006		2023-06-09	2023-11-30	2024-02-29
B41858D5187M008		2023-06-09	2023-11-30	2024-02-29
B41858D5227M000		2023-06-09	2023-11-30	2024-02-29
B41858D5227M006		2023-06-09	2023-11-30	2024-02-29
B41858D5227M008		2023-06-09	2023-11-30	2024-02-29
B41858D7127M000		2023-06-09	2023-11-30	2024-02-29
B41858D7127M006		2023-06-09	2023-11-30	2024-02-29
B41858D7127M008		2023-06-09	2023-11-30	2024-02-29
B41858G8686M000		2023-06-09	2023-11-30	2024-02-29
B41858G8686M006		2023-06-09	2023-11-30	2024-02-29
B41858G8686M008		2023-06-09	2023-11-30	2024-02-29

Please contact your nearest TDK sales office if you need support in selecting a suitable substitute. The addresses of our worldwide sales network are presented at www.tdk-electronics.tdk.com/sales.

chanhvinh.com

chanhvinh.com

Long-life grade capacitors

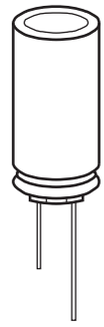

Applications
- Automotive electronics

Features
- Low impedance at high frequency
- High reliability
- Low ESR
- High ripple current capability
- RoHS-compatible

Construction
- Radial leads
- Charge-discharge proof, polar
- Aluminum case with PET insulating sleeve
- Minus pole marking on the insulating sleeve
- Case with safety vent

Delivery mode

Terminal configurations and packing:
- Bulk
- Taped, Ammo pack
- Cut
- Kinked
- PAPR (Protection Against Polarity Reversal): crimped leads, J leads, bent leads

Refer to chapter "Single-ended capacitors – Taping, packing and lead configurations" for further details.

chanhvinh.com

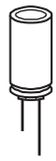

Specifications and characteristics in brief

Rated voltage V_R Surge voltage V_S	10 ... 100 V DC 1.15 · V_R							
Rated capacitance C_R Capacitance tolerance	22 ... 10000 µF ±20% ≙ M							
Dissipation factor tan δ (20 °C, 120 Hz)	For capacitance higher than 1000 µF add 0.02 for every increase of 1000 µF.							
	V_R (V DC)	10	16	25	35	50	63	100
	tan δ (max.)	0.19	0.16	0.14	0.12	0.10	0.10	0.08
Leakage current I_{leak} (20 °C, 5 min)	$I_{leak} = 0.01\ \mu A \cdot \left(\frac{C_R}{\mu F} \cdot \frac{V_R}{V}\right)$							
Self-inductance ESL	Diameter (mm)	8 ... 12.5		16		18		
	ESL (nH)	20		26		34		
Useful life[1] 105 °C; V_R; $I_{AC,R}$	> 3000 h for d = 8 mm > 5000 h for d ≥ 10 mm	Requirements: $\lvert\Delta C/C\rvert$ ≤ 40% of initial value tan δ ≤ 3 times initial specified limit I_{leak} ≤ initial specified limit						
Voltage endurance test 105 °C; V_R	3000 h for d = 8 mm 5000 h for d ≥ 10 mm	Post test requirements: $\lvert\Delta C/C\rvert$ ≤ 30% of initial value tan δ ≤ 2 times initial specified limit I_{leak} ≤ initial specified limit						
Vibration resistance test	To IEC 60068-2-6, test Fc: Frequency range 10 Hz ... 2 kHz, displacement amplitude max. 1.5 mm, acceleration max. 20 *g*, duration 3 × 2 h. Capacitor rigidly clamped by the aluminum case e.g. using our standard fixture							
IEC climatic category	To IEC 60068-1: 55/105/56 (−55 °C/+105 °C/56 days damp heat test)							
Sectional specification	IEC 60384-4							
Reference standard	AEC-Q200[2]							

1) Refer to chapter "General technical information, 5 Useful life" on how to interpret useful life.
2) Refer to chapter "General technical information, 2.3 AEC-Q200 standard" for further details.

chanhvinh.com

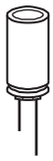

B41858

Low impedance – 105 °C

Dimensional drawings

With stand-off rubber seal

Diameters (mm): 10, 12.5, 16, 18

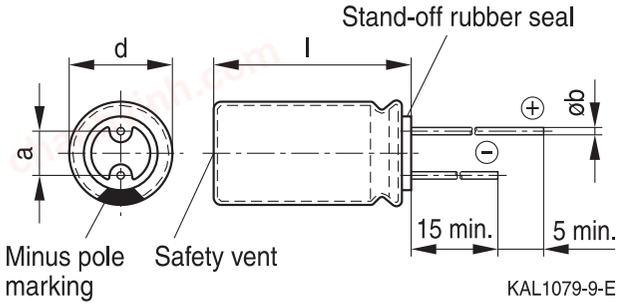

With flat rubber seal

Diameter (mm): 8

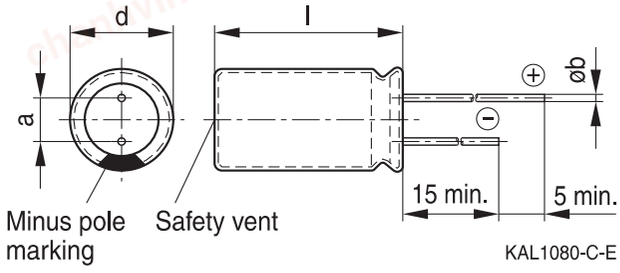

Dimensions and weights

Dimensions (mm)				Approx. weight
d +0.5	l	a ±0.5	b	g
8	11.5 +1.5	3.5	0.60 ±0.05	1.0
10	12.5 +1.0	5.0	0.60 ±0.05	1.6
10	16 +1.0	5.0	0.60 ±0.05	1.9
10	20 +2.0	5.0	0.60 ±0.05	2.6
12.5	20 +2.0	5.0	0.60 ±0.05	3.6
12.5	25 +2.0	5.0	0.60 ±0.05	4.5
16	20 +2.0	7.5	0.80 ±0.05	5.5
16	25 +2.0	7.5	0.80 ±0.05	7.5
16	31.5 +2.0	7.5	0.80 ±0.05	7.8
16	35.5 +2.0	7.5	0.80 ±0.05	9.2
18	20 +2.0	7.5	0.80 ±0.1	8.0
18	25 +2.0	7.5	0.80 ±0.1	9.0
18	31.5 +2.0	7.5	0.80 ±0.1	11.0
18	35 +2.0	7.5	0.80 ±0.1	13.0
18	40 +2.0	7.5	0.80 ±0.1	16.0

chanhvinh.com

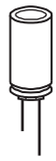

Overview of available types

Other voltage and capacitance ratings are available upon request.

V_R (V DC)	10	16	25	35
	Case dimensions d × l (mm)			
C_R (µF)				
100				8 × 11.5
120				8 × 11.5
150				8 × 11.5
180			8 × 11.5	10 × 12.5
220			8 × 11.5	10 × 12.5
270		8 × 11.5	10 × 12.5	
330	8 × 11.5	8 × 11.5	10 × 12.5	10 × 16
390	8 × 11.5			
470	8 × 11.5	10 × 12.5	10 × 16	10 × 20
560	10 × 12.5	10 × 16	10 × 16	10 × 20
680	10 × 12.5	10 × 16	10 × 20	12.5 × 20
820	10 × 16	10 × 20	10 × 20	
1000	10 × 16	10 × 20	12.5 × 20	12.5 × 25 16 × 20
1200	10 × 16	10 × 20		16 × 20
1500	10 × 20	12.5 × 20	12.5 × 25	16 × 25
1800	10 × 20	12.5 × 25	16 × 20	16 × 25 18 × 20
2200	12.5 × 20	12.5 × 25	16 × 25 18 × 20	18 × 25
2700	12.5 × 25	16 × 20	16 × 31.5 18 × 20	18 × 31.5
3300	12.5 × 25 16 × 20	16 × 25	18 × 25	16 × 35.5 18 × 31.5
3900	16 × 20	16 × 31.5 18 × 20	16 × 35.5 18 × 31.5	18 × 35
4700	18 × 20	18 × 25	18 × 31.5	18 × 40
5600			18 × 35	
6800	16 × 31.5	18 × 31.5	18 × 40	
8200	18 × 31.5	18 × 35		
10000	18 × 35	18 × 40		

chanhvinh.com

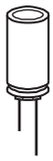

B41858

Low impedance – 105 °C

Overview of available types

Other voltage and capacitance ratings are available upon request.

V_R (V DC)	50	63	100
	Case dimensions d × l (mm)		
C_R (µF)			
22			8 × 11.5
33			10 × 16
47			10 × 20
68		8 × 11.5	
100	8 × 11.5	10 × 12.5	12.5 × 20
120	10 × 12.5	10 × 16	12.5 × 25
150	10 × 12.5	10 × 16	
180	10 × 16	10 × 20	16 × 20
220	10 × 16	10 × 20	16 × 25
270		12.5 × 20	18 × 20
330	10 × 20	12.5 × 20	16 × 31.5 18 × 25
390		12.5 × 25	18 × 31.5
470	12.5 × 20	12.5 × 25 16 × 20	18 × 35
560	12.5 × 25		18 × 35
680		16 × 25 18 × 20	18 × 40
820	16 × 20	16 × 31.5 18 × 25	
1000	16 × 31.5 18 × 20	16 × 31.5	
1200	18 × 20	18 × 31.5	
1500	18 × 25	18 × 35	
1800	16 × 35.5 18 × 31.5	18 × 40	
2200	18 × 35		
2700	18 × 40		

chanhvinh.com

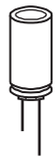

Technical data and ordering codes

C_R 120 Hz 20 °C µF	Case dimensions d × l mm	ESR_{max} 10 kHz −40 °C Ω	ESR_{max} 10 kHz 20 °C Ω	Z_{max} 100 kHz 20 °C Ω	$I_{AC,R}$ 100 kHz 105 °C mA	Ordering code (composition see below)
V_R = 10 V DC						
330	8 × 11.5	2.195	0.274	0.246	436	B41858C3337M***
390	8 × 11.5	2.195	0.274	0.246	436	B41858C3397M***
470	8 × 11.5	2.195	0.274	0.246	436	B41858C3477M***
560	10 × 12.5	1.035	0.129	0.113	746	B41858C3567M***
680	10 × 12.5	1.035	0.129	0.113	746	B41858C3687M***
820	10 × 16	0.946	0.118	0.105	846	B41858C3827M***
1000	10 × 16	0.946	0.118	0.105	846	B41858C3108M***
1200	10 × 16	0.944	0.118	0.105	846	B41858C3128M***
1500	10 × 20	0.584	0.073	0.062	1202	B41858C3158M***
1800	10 × 20	0.584	0.073	0.062	1202	B41858C3188M***
2200	12.5 × 20	0.496	0.062	0.060	1396	B41858C3228M***
2700	12.5 × 25	0.327	0.041	0.034	2028	B41858C3278M***
3300	12.5 × 25	0.327	0.041	0.034	2028	B41858C3338M***
3300	16 × 20	0.307	0.038	0.033	2146	B41858D3338M***
3900	16 × 20	0.307	0.038	0.033	2146	B41858D3398M***
4700	18 × 20	0.271	0.034	0.031	2381	B41858C3478M***
6800	16 × 31.5	0.192	0.024	0.022	3122	B41858C3688M***
8200	18 × 31.5	0.165	0.021	0.020	3539	B41858C3828M***
10000	18 × 35	0.160	0.020	0.018	3864	B41858C3109M***

Composition of ordering code

*** = Version

- 000 = for standard leads, bulk
- 001 = for kinked leads, bulk (for d × l = 10 × 20 mm ... 18 × 40 mm)
- 002 = for cut leads, bulk (for ∅ 10 ... 18 mm)
- 003 = for crimped leads, blister (for ∅ 16 ... 18 mm)
- 004 = for J leads, blister (for ∅ 10 ... 18 mm, excluding d × l = 18 × 40 mm)
- 006 = for taped leads, Ammo pack, lead spacing F = 3.5 mm (for ∅ 8 mm)
- 008 = for taped leads, Ammo pack, lead spacing F = 5.0 mm (for ∅ 8 ... 12.5 mm)
- 009 = for taped leads, Ammo pack, lead spacing F = 7.5 mm (for d × l = 16 × 20 ... 16 × 31.5 mm and 18 × 20 ... 18 × 31.5 mm)
- 012 = for bent 90° leads, blister (for ∅ 16 ... 18 mm)

chanhvinh.com

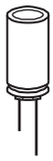

B41858

Low impedance – 105 °C

Technical data and ordering codes

C_R 120 Hz 20 °C µF	Case dimensions d × l mm	ESR_{max} 10 kHz −40 °C Ω	ESR_{max} 10 kHz 20 °C Ω	Z_{max} 100 kHz 20 °C Ω	$I_{AC,R}$ 100 kHz 105 °C mA	Ordering code (composition see below)
V_R = 16 V DC						
270	8 × 11.5	2.192	0.274	0.246	436	B41858D4277M***
330	8 × 11.5	2.192	0.274	0.246	436	B41858D4337M***
470	10 × 12.5	1.035	0.129	0.113	746	B41858C4477M***
560	10 × 16	0.944	0.118	0.105	846	B41858C4567M***
680	10 × 16	0.946	0.118	0.105	846	B41858C4687M***
820	10 × 20	0.584	0.073	0.062	1202	B41858C4827M***
1000	10 × 20	0.584	0.073	0.062	1202	B41858C4108M***
1200	10 × 20	0.584	0.073	0.062	1202	B41858C4128M***
1500	12.5 × 20	0.496	0.062	0.060	1396	B41858C4158M***
1800	12.5 × 25	0.327	0.041	0.034	2028	B41858C4188M***
2200	12.5 × 25	0.327	0.041	0.034	2028	B41858C4228M***
2700	16 × 20	0.307	0.038	0.033	2146	B41858C4278M***
3300	16 × 25	0.251	0.031	0.029	2483	B41858C4338M***
3900	16 × 31.5	0.192	0.024	0.022	3122	B41858D4398M***
3900	18 × 20	0.271	0.034	0.031	2381	B41858C4398M***
4700	18 × 25	0.217	0.027	0.024	2941	B41858C4478M***
6800	18 × 31.5	0.165	0.021	0.020	3539	B41858C4688M***
8200	18 × 35	0.160	0.020	0.018	3864	B41858C4828M***
10000	18 × 40	0.125	0.016	0.015	4467	B41858C4109M***

Composition of ordering code

*** = Version

- 000 = for standard leads, bulk
- 001 = for kinked leads, bulk (for d × l = 10 × 20 mm ... 18 × 40 mm)
- 002 = for cut leads, bulk (for ∅ 10 ... 18 mm)
- 003 = for crimped leads, blister (for ∅ 16 ... 18 mm)
- 004 = for J leads, blister (for ∅ 10 ... 18 mm, excluding d × l = 18 × 40 mm)
- 006 = for taped leads, Ammo pack, lead spacing F = 3.5 mm (for ∅ 8 mm)
- 008 = for taped leads, Ammo pack, lead spacing F = 5.0 mm (for ∅ 8 ... 12.5 mm)
- 009 = for taped leads, Ammo pack, lead spacing F = 7.5 mm (for d × l = 16 × 20 ... 16 × 31.5 mm and 18 × 20 ... 18 × 31.5 mm)
- 012 = for bent 90° leads, blister (for ∅ 16 ... 18 mm)

chanhvinh.com

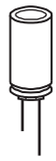

Technical data and ordering codes

C_R 120 Hz 20 °C µF	Case dimensions d × l mm	ESR_{max} 10 kHz −40 °C Ω	ESR_{max} 10 kHz 20 °C Ω	Z_{max} 100 kHz 20 °C Ω	$I_{AC,R}$ 100 kHz 105 °C mA	Ordering code (composition see below)
V_R = 25 V DC						
180	8 × 11.5	2.192	0.274	0.246	436	B41858D5187M***
220	8 × 11.5	2.192	0.274	0.246	436	B41858D5227M***
270	10 × 12.5	1.032	0.129	0.113	746	B41858C5277M***
330	10 × 12.5	1.035	0.129	0.113	746	B41858C5337M***
470	10 × 16	0.946	0.118	0.105	846	B41858C5477M***
560	10 × 16	0.944	0.118	0.105	846	B41858C5567M***
680	10 × 20	0.584	0.073	0.062	1202	B41858C5687M***
820	10 × 20	0.584	0.073	0.062	1202	B41858C5827M***
1000	12.5 × 20	0.496	0.062	0.060	1396	B41858C5108M***
1500	12.5 × 25	0.327	0.041	0.034	2028	B41858C5158M***
1800	16 × 20	0.307	0.038	0.033	2146	B41858C5188M***
2200	16 × 25	0.251	0.031	0.029	2483	B41858C5228M***
2200	18 × 20	0.248	0.031	0.031	2381	B41858E5228M***
2700	16 × 31.5	0.192	0.024	0.022	3122	B41858D5278M***
2700	18 × 20	0.271	0.034	0.031	2381	B41858C5278M***
3300	18 × 25	0.217	0.027	0.024	2941	B41858C5338M***
3900	16 × 35.5	0.168	0.021	0.019	3408	B41858D5398M***
3900	18 × 31.5	0.165	0.021	0.020	3539	B41858C5398M***
4700	18 × 31.5	0.165	0.021	0.020	3539	B41858D5478M***
5600	18 × 35	0.160	0.020	0.018	3864	B41858D5568M***
6800	18 × 40	0.128	0.016	0.015	4467	B41858C5688M***

Composition of ordering code

*** = Version

- 000 = for standard leads, bulk
- 001 = for kinked leads, bulk (for d × l = 10 × 20 mm ... 18 × 40 mm)
- 002 = for cut leads, bulk (for ∅ 10 ... 18 mm)
- 003 = for crimped leads, blister (for ∅ 16 ... 18 mm)
- 004 = for J leads, blister (for ∅ 10 ... 18 mm, excluding d × l = 18 × 40 mm)
- 006 = for taped leads, Ammo pack, lead spacing F = 3.5 mm (for ∅ 8 mm)
- 008 = for taped leads, Ammo pack, lead spacing F = 5.0 mm (for ∅ 8 ... 12.5 mm)
- 009 = for taped leads, Ammo pack, lead spacing F = 7.5 mm (for d × l = 16 × 20 ... 16 × 31.5 mm and 18 × 20 ... 18 × 31.5 mm)
- 012 = for bent 90° leads, blister (for ∅ 16 ... 18 mm)

chanhvinh.com

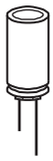

B41858

Low impedance – 105 °C

Technical data and ordering codes

C_R 120 Hz 20 °C µF	Case dimensions d × l mm	ESR_{max} 10 kHz −40 °C Ω	ESR_{max} 10 kHz 20 °C Ω	Z_{max} 100 kHz 20 °C Ω	$I_{AC,R}$ 100 kHz 105 °C mA	Ordering code (composition see below)
V_R = 35 V DC						
100	8 × 11.5	2.192	0.274	0.246	436	B41858C7107M***
120	8 × 11.5	2.192	0.274	0.246	436	B41858D7127M***
150	8 × 11.5	2.192	0.274	0.246	436	B41858C7157M***
180	10 × 12.5	1.035	0.129	0.113	746	B41858C7187M***
220	10 × 12.5	1.035	0.129	0.113	746	B41858C7227M***
330	10 × 16	0.946	0.118	0.105	846	B41858C7337M***
470	10 × 20	0.584	0.073	0.062	1202	B41858C7477M***
560	10 × 20	0.584	0.073	0.062	1202	B41858C7567M***
680	12.5 × 20	0.496	0.062	0.060	1396	B41858C7687M***
1000	12.5 × 25	0.327	0.041	0.034	2028	B41858C7108M***
1000	16 × 20	0.304	0.038	0.033	2146	B41858D7108M***
1200	16 × 20	0.307	0.038	0.033	2146	B41858C7128M***
1500	16 × 25	0.251	0.031	0.029	2483	B41858C7158M***
1800	16 × 25	0.248	0.031	0.029	2483	B41858E7188M***
1800	18 × 20	0.271	0.034	0.031	2381	B41858C7188M***
2200	18 × 25	0.217	0.027	0.024	2941	B41858C7228M***
2700	18 × 31.5	0.165	0.021	0.020	3539	B41858C7278M***
3300	16 × 35.5	0.168	0.021	0.019	3408	B41858E7338M***
3300	18 × 31.5	0.165	0.021	0.020	3539	B41858D7338M***
3900	18 × 35	0.160	0.020	0.018	3864	B41858C7398M***
4700	18 × 40	0.125	0.016	0.015	4467	B41858C7478M***

Composition of ordering code

*** = Version

- 000 = for standard leads, bulk
- 001 = for kinked leads, bulk (for d × l = 10 × 20 mm ... 18 × 40 mm)
- 002 = for cut leads, bulk (for ∅ 10 ... 18 mm)
- 003 = for crimped leads, blister (for ∅ 16 ... 18 mm)
- 004 = for J leads, blister (for ∅ 10 ... 18 mm, excluding d × l = 18 × 40 mm)
- 006 = for taped leads, Ammo pack, lead spacing F = 3.5 mm (for ∅ 8 mm)
- 008 = for taped leads, Ammo pack, lead spacing F = 5.0 mm (for ∅ 8 ... 12.5 mm)
- 009 = for taped leads, Ammo pack, lead spacing F = 7.5 mm (for d × l = 16 × 20 ... 16 × 31.5 mm and 18 × 20 ... 18 × 31.5 mm)
- 012 = for bent 90° leads, blister (for ∅ 16 ... 18 mm)

chanhvinh.com

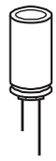

Technical data and ordering codes

C_R 120 Hz 20 °C µF	Case dimensions d × l mm	ESR_{max} 10 kHz −40 °C Ω	ESR_{max} 10 kHz 20 °C Ω	Z_{max} 100 kHz 20 °C Ω	$I_{AC,R}$ 100 kHz 105 °C mA	Ordering code (composition see below)
V_R = 50 V DC						
100	8 × 11.5	5.168	0.646	0.573	340	B41858C6107M***
120	10 × 12.5	2.984	0.373	0.336	555	B41858C6127M***
150	10 × 12.5	2.984	0.373	0.336	555	B41858C6157M***
180	10 × 16	1.400	0.175	0.160	778	B41858C6187M***
220	10 × 16	1.400	0.175	0.160	778	B41858C6227M***
330	10 × 20	1.000	0.125	0.118	1030	B41858C6337M***
470	12.5 × 20	0.880	0.110	0.104	1300	B41858C6477M***
560	12.5 × 25	0.712	0.089	0.082	1490	B41858C6567M***
820	16 × 20	0.401	0.050	0.046	1820	B41858D6827M***
1000	16 × 31.5	0.260	0.032	0.030	2653	B41858C6108M***
1000	18 × 20	0.477	0.048	0.044	1997	B41858D6108M***
1200	18 × 20	0.384	0.048	0.044	1997	B41858C6128M***
1500	18 × 25	0.382	0.038	0.036	2417	B41858C6158M***
1800	16 × 35.5	0.232	0.029	0.026	2896	B41858D6188M***
1800	18 × 31.5	0.300	0.030	0.028	2989	B41858C6188M***
2200	18 × 35	0.268	0.027	0.024	3320	B41858C6228M***
2700	18 × 40	0.210	0.021	0.020	3871	B41858C6278M***

Composition of ordering code

*** = Version

- 000 = for standard leads, bulk
- 001 = for kinked leads, bulk (for d × l = 10 × 20 mm ... 18 × 40 mm)
- 002 = for cut leads, bulk (for ∅ 10 ... 18 mm)
- 003 = for crimped leads, blister (for ∅ 16 ... 18 mm)
- 004 = for J leads, blister (for ∅ 10 ... 18 mm, excluding d × l = 18 × 40 mm)
- 006 = for taped leads, Ammo pack, lead spacing F = 3.5 mm (for ∅ 8 mm)
- 008 = for taped leads, Ammo pack, lead spacing F = 5.0 mm (for ∅ 8 ... 12.5 mm)
- 009 = for taped leads, Ammo pack, lead spacing F = 7.5 mm (for d × l = 16 × 20 ... 16 × 31.5 mm and 18 × 20 ... 18 × 31.5 mm)
- 012 = for bent 90° leads, blister (for ∅ 16 ... 18 mm)

chanhvinh.com

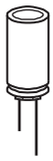

B41858

Low impedance – 105 °C

Technical data and ordering codes

C_R 120 Hz 20 °C µF	Case dimensions d × l mm	ESR_{max} 10 kHz −40 °C Ω	ESR_{max} 10 kHz 20 °C Ω	Z_{max} 100 kHz 20 °C Ω	$I_{AC,R}$ 100 kHz 105 °C mA	Ordering code (composition see below)
V_R = 63 V DC						
68	8 × 11.5	4.328	0.541	0.488	310	B41858G8686M***
100	10 × 12.5	4.616	0.577	0.500	354	B41858G8107M***
120	10 × 16	3.075	0.308	0.279	519	B41858G8127M***
150	10 × 16	2.464	0.308	0.279	519	B41858G8157M***
180	10 × 20	1.986	0.199	0.180	705	B41858G8187M***
220	10 × 20	1.592	0.199	0.180	705	B41858G8227M***
270	12.5 × 20	1.688	0.169	0.153	876	B41858G8277M***
330	12.5 × 20	1.688	0.169	0.153	876	B41858G8337M***
390	12.5 × 25	1.236	0.124	0.112	1118	B41858G8397M***
470	12.5 × 25	0.992	0.124	0.112	1118	B41858G8477M***
470	16 × 20	1.037	0.104	0.094	1272	B41858H8477M***
680	16 × 25	0.772	0.077	0.070	1600	B41858G8687M***
680	18 × 20	0.960	0.096	0.087	1427	B41858H8687M***
820	16 × 31.5	0.541	0.054	0.049	2092	B41858G8827M***
820	18 × 25	0.761	0.076	0.069	1735	B41858H8827M***
1000	16 × 31.5	0.540	0.054	0.049	2092	B41858G8108M***
1200	18 × 31.5	0.518	0.052	0.047	2294	B41858G8128M***
1500	18 × 35	0.441	0.044	0.040	2592	B41858G8158M***
1800	18 × 40	0.375	0.038	0.034	2967	B41858G8188M***

Composition of ordering code

*** = Version

- 000 = for standard leads, bulk
- 001 = for kinked leads, bulk (for d × l = 10 × 20 mm ... 18 × 40 mm)
- 002 = for cut leads, bulk (for ∅ 10 ... 18 mm)
- 003 = for crimped leads, blister (for ∅ 16 ... 18 mm)
- 004 = for J leads, blister (for ∅ 10 ... 18 mm, excluding d × l = 18 × 40 mm)
- 006 = for taped leads, Ammo pack, lead spacing F = 3.5 mm (for ∅ 8 mm)
- 008 = for taped leads, Ammo pack, lead spacing F = 5.0 mm (for ∅ 8 ... 12.5 mm)
- 009 = for taped leads, Ammo pack, lead spacing F = 7.5 mm (for d × l = 16 × 20 ... 16 × 31.5 mm and 18 × 20 ... 18 × 31.5 mm)
- 012 = for bent 90° leads, blister (for ∅ 16 ... 18 mm)

chanhvinh.com

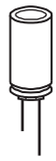

Technical data and ordering codes

C_R 120 Hz 20 °C µF	Case dimensions d × l mm	ESR_{max} 10 kHz −40 °C Ω	ESR_{max} 10 kHz 20 °C Ω	Z_{max} 100 kHz 20 °C Ω	$I_{AC,R}$ 100 kHz 105 °C mA	Ordering code (composition see below)
V_R = 100 V DC						
22	8 × 11.5	12.219	1.222	1.114	205	B41858C9226M***
33	10 × 16	6.542	0.654	0.589	357	B41858C9336M***
47	10 × 20	3.688	0.461	0.423	460	B41858C9476M***
100	12.5 × 20	3.048	0.305	0.281	647	B41858C9107M***
120	12.5 × 25	2.038	0.204	0.188	864	B41858C9127M***
180	16 × 20	1.313	0.131	0.122	1119	B41858D9187M***
220	16 × 25	0.985	0.099	0.091	1402	B41858C9227M***
270	18 × 20	1.260	0.126	0.119	1220	B41858D9277M***
330	16 × 31.5	0.973	0.097	0.090	1546	B41858C9337M***
330	18 × 25	1.008	0.101	0.095	1477	B41858D9337M***
390	18 × 31.5	0.720	0.072	0.068	1907	B41858C9397M***
470	18 × 35	0.679	0.068	0.063	2061	B41858C9477M***
560	18 × 35	0.679	0.068	0.063	2061	B41858C9567M***
680	18 × 40	0.438	0.044	0.042	2683	B41858C9687M***

Composition of ordering code

*** = Version

- 000 = for standard leads, bulk
- 001 = for kinked leads, bulk (for d × l = 10 × 20 mm ... 18 × 40 mm)
- 002 = for cut leads, bulk (for ∅ 10 ... 18 mm)
- 003 = for crimped leads, blister (for ∅ 16 ... 18 mm)
- 004 = for J leads, blister (for ∅ 10 ... 18 mm, excluding d × l = 18 × 40 mm)
- 006 = for taped leads, Ammo pack, lead spacing F = 3.5 mm (for ∅ 8 mm)
- 008 = for taped leads, Ammo pack, lead spacing F = 5.0 mm (for ∅ 8 ... 12.5 mm)
- 009 = for taped leads, Ammo pack, lead spacing F = 7.5 mm (for d × l = 16 × 20 ... 16 × 31.5 mm and 18 × 20 ... 18 × 31.5 mm)
- 012 = for bent 90° leads, blister (for ∅ 16 ... 18 mm)

chanhvinh.com

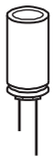

B41858

Low impedance – 105 °C

Useful life[1)]

depending on ambient temperature T_A under ripple current operating conditions

d = 8 mm

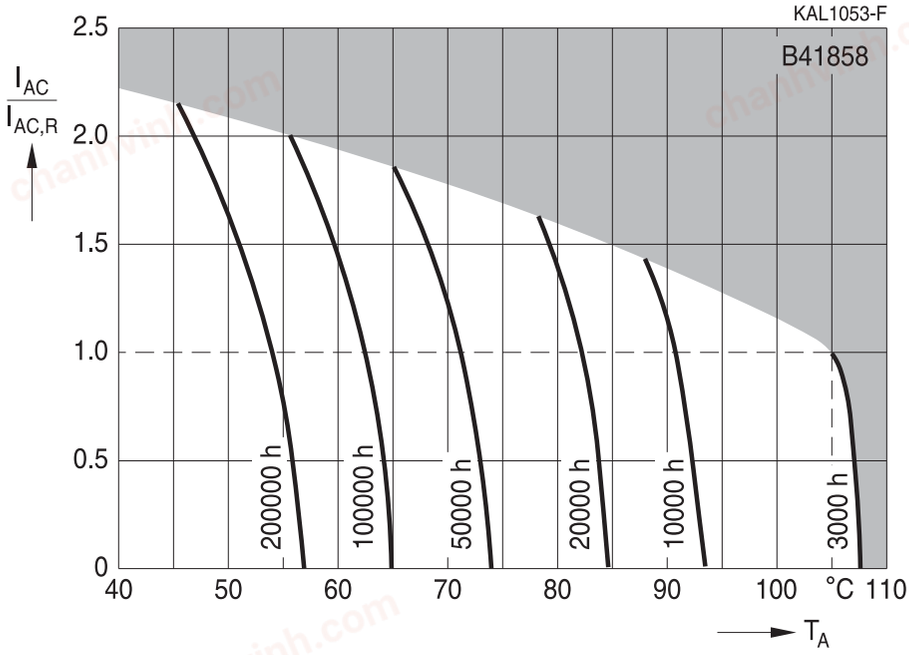

Useful life[1)]

depending on ambient temperature T_A under ripple current operating conditions

d ≥ 10 mm

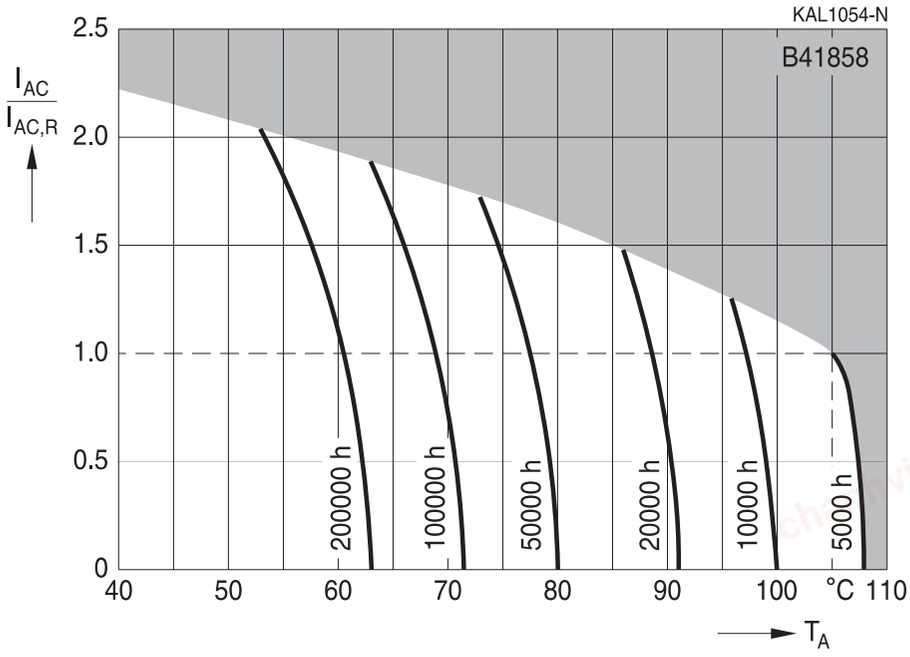

1) Refer to chapter "General technical information, 5 Useful life" on how to interpret useful life.

chanhvinh.com

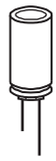

Frequency factor of permissible ripple current I_{AC} versus frequency f

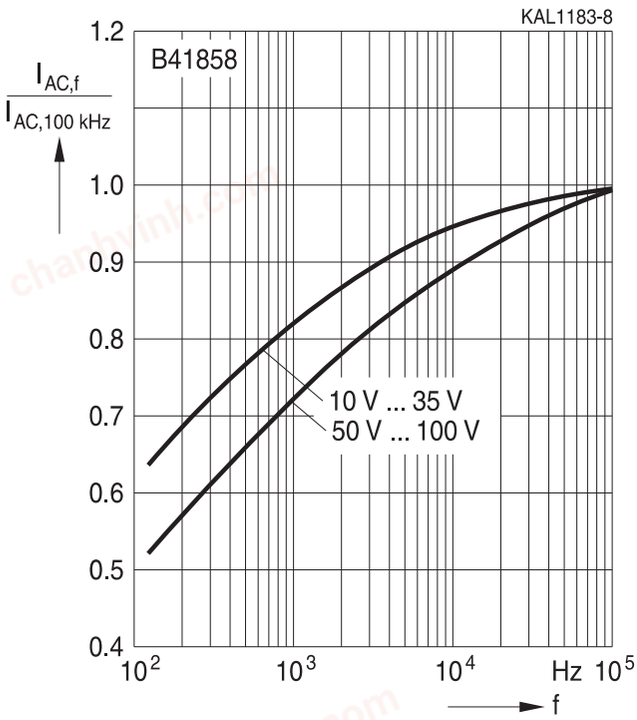

chanhvinh.com

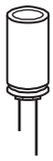

B41858

Low impedance – 105 °C

Taping

Single-ended capacitors are available taped in Ammo pack from diameter 8 to 18 mm as follows:

Lead spacing F = 3.5 mm (∅ d = 8 mm)
Lead spacing F = 5.0 mm (∅ d = 8 … 12.5 mm)
Lead spacing F = 7.5 mm (∅ d = 16 ... 18 mm).

The dimensions for F, P_1 and 1 max. are specified with reference to the center of the terminal wires.

Lead spacing 3.5 mm (∅ d = 8 mm)

Last 3 digits of ordering code: 006

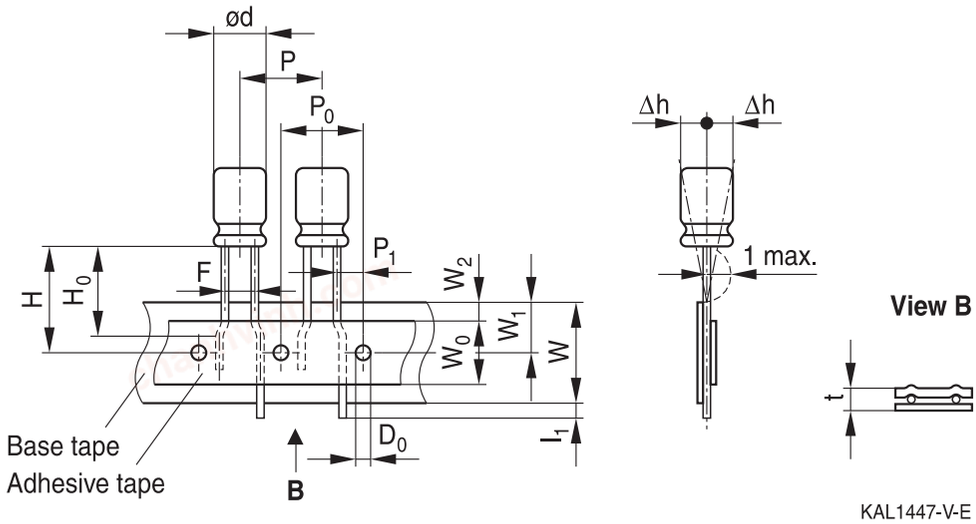

Dimensions in mm

∅ d	F	H	W	W_0	W_1	W_2	P	P_0	P_1	I_1	t	Δh	D_0
8	3.5	18.5	18.0	9.5	9.0	3.0	12.7	12.7	4.6	1.0	0.7	1.0	4.0
Toler-ance	+0.8 −0.2	±1.0	±0.5	min.	±0.5	max.	±1.0	±0.3	±0.6	max.	±0.2	max.	±0.2

Leads can also run straight through the taping area.

chanhvinh.com

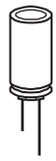

Lead spacing 5.0 mm (∅ d = 8 mm)

Last 3 digits of ordering code: 008

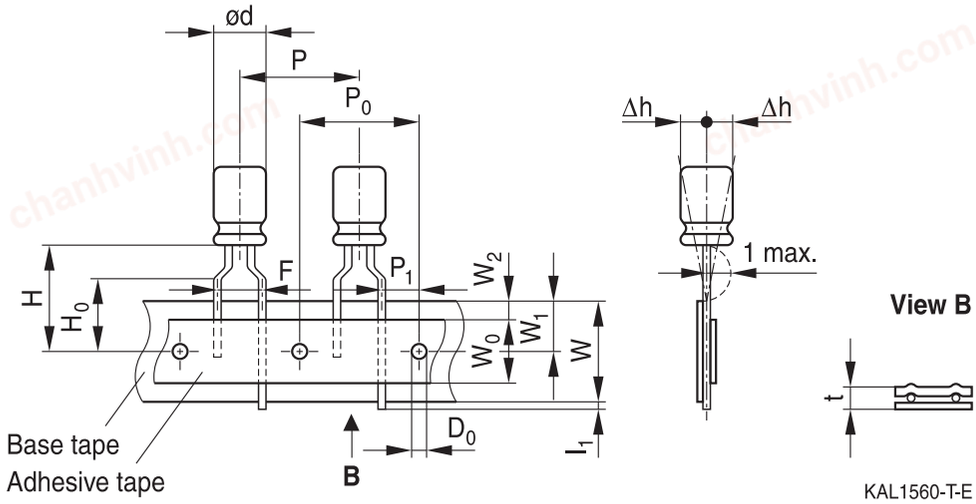

Lead spacing 5.0 mm (∅ d = 10 ... 12.5 mm)

Last 3 digits of ordering code: 008

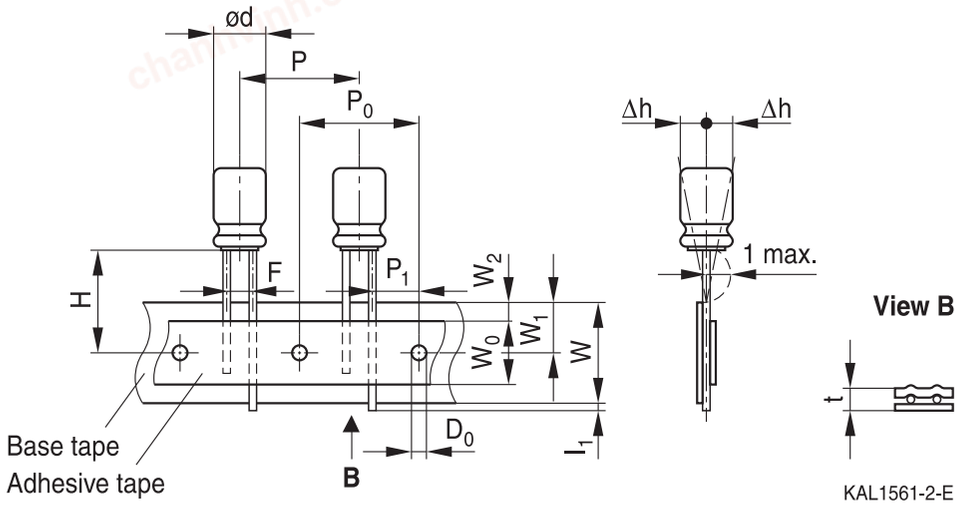

Dimensions in mm

∅ d	F	H	W	W_0	W_1	W_2	H_0	P	P_0	P_1	l_1	t	Δh	D_0
8		20.0		9.5			16.0	12.7	12.7	3.85				
10	5.0	19.0	18.0	9.5	9.0	1.5	–	12.7	12.7	3.85	1.0	0.6	1.0	4.0
12.5		19.0		11.5			–	15.0	15.0	5.0				
Tolerance	+0.8 −0.2	±0.75	±0.5	min.	±0.5	max.	±0.5	±1.0	±0.2	±0.5	max.	+0.3 −0.2	max.	±0.2

Taping is available up to dimensions d × l = 12.5 × 25 mm.

chanhvinh.com

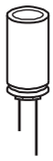

B41858

Low impedance – 105 °C

Lead spacing 7.5 mm (∅ d = 16 ...18 mm)

Last 3 digits of ordering code: 009

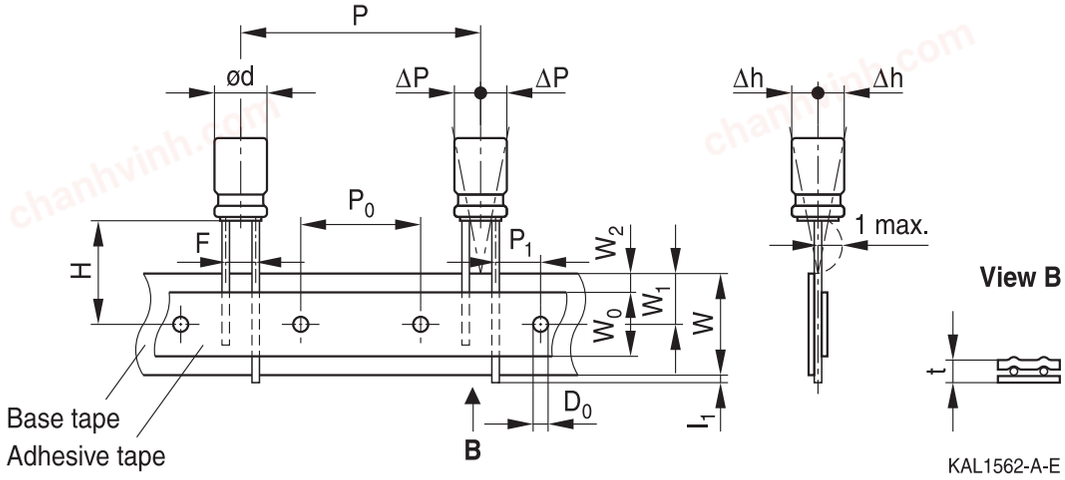

Dimensions in mm

∅ d	F	H	W	W_0	W_1	W_2	P	P_0	P_1	l_1	t	ΔP	Δh	D_0
16 18	7.5	18.5	18.0	12.5	9.0	1.5	30.0	15.0	3.75	1.0	0.7	0	0	4.0
Tolerance	±0.8	−0.5 +0.75	±0.5	min.	±0.5	max.	±1.0	±0.2	±0.5	max.	±0.2	±1.0	±1.0	±0.2

Taping is available up to dimensions d × l = 16 × 31.5 mm and 18 × 31.5 mm.

chanhvinh.com

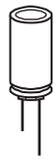

Cut or kinked leads

Single-ended capacitors are available with cut or kinked leads. Other lead configurations also available upon request.

Cut leads

Last 3 digits of ordering code: 002

With stand-off rubber seal

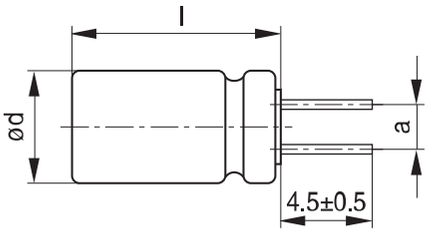

KAL1085-I

With flat rubber seal

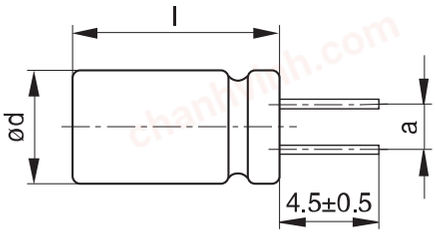

KAL1086-R

Case size d × l (mm)	Dimensions (mm) a ±0.5
10 × 12.5	5.0
10 × 16	5.0
10 × 20	5.0
12.5 × 20	5.0
12.5 × 25	5.0
16 × 20	7.5
16 × 25	7.5
16 × 31.5	7.5
16 × 35.5	7.5
16 × 40	7.5
18 × 20	7.5
18 × 25	7.5
18 × 31.5	7.5
18 × 35	7.5
18 × 40	7.5

chanhvinh.com

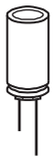

B41858

Low impedance – 105 °C

Kinked leads

Last 3 digits of ordering code: 001

With stand-off rubber seal

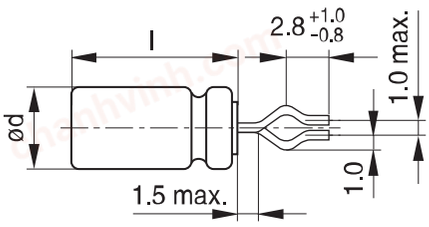

KAL1081-K

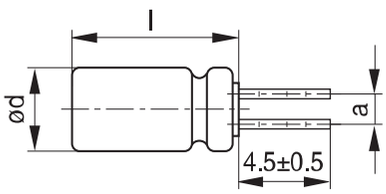

KAL1083-2

With flat rubber seal

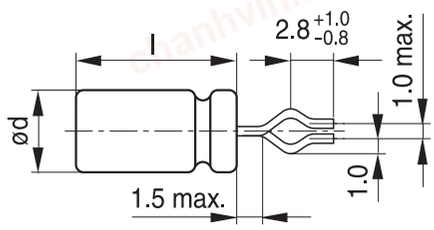

KAL1082-T

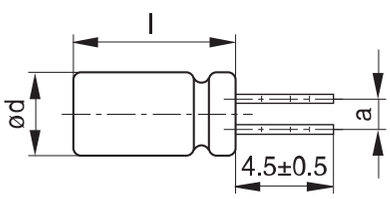

KAL1084-A

Case size d × l (mm)	Dimensions (mm) a ±0.5
10 × 20	5.0
12.5 × 20	5.0
12.5 × 25	5.0
16 × 20	7.5
16 × 25	7.5
16 × 31.5	7.5
16 × 35.5	7.5
18 × 20	7.5
18 × 25	7.5
18 × 31.5	7.5
18 × 35	7.5
18 × 40	7.5

chanhvinh.com

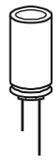

PAPR leads (Protection Against Polarity Reversal)

These lead configurations ensure correct placement of the capacitor on the PCB with regard to polarity. PAPR leads are available for diameters from 10 mm up to 18 mm.
There are three configurations available: Crimped leads, J leads, bent 90° leads.

Crimped leads

Last 3 digits of ordering code: 003

With stand-off rubber seal

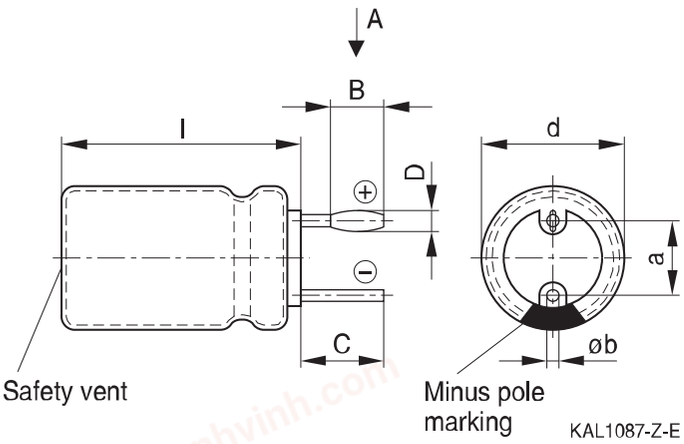

The series B41897 and B41898 have no sleeve nor minus pole marking, the positive pole is marked on the aluminum case side instead.

Suggestion for PCB hole diameter

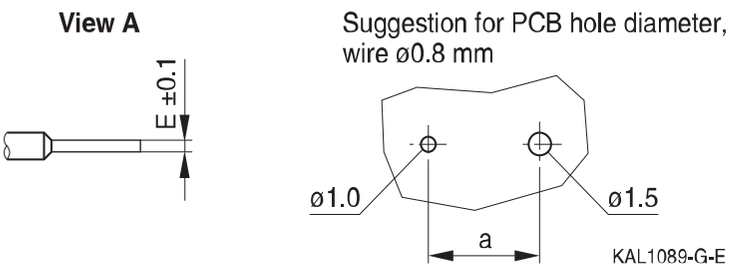

Case size	Dimensions (mm)					
d × l (mm)	B ±0.2	C ±0.5	D ±0.1	E ±0.1	a ±0.5	∅b
16 × 20	1.5	3.0	1.3	0.3	7.5	0.8 ±0.05
16 × 25	1.5	3.0	1.3	0.3	7.5	0.8 ±0.05
16 × 31.5	1.5	3.0	1.3	0.3	7.5	0.8 ±0.05
16 × 35.5	1.5	3.0	1.3	0.3	7.5	0.8 ±0.05
18 × 20	1.5	3.0	1.3	0.3	7.5	0.8 ±0.1
18 × 25	1.5	3.0	1.3	0.3	7.5	0.8 ±0.1
18 × 31.5	1.5	3.0	1.3	0.3	7.5	0.8 ±0.1
18 × 35	1.5	3.0	1.3	0.3	7.5	0.8 ±0.1
18 × 40	1.5	3.0	1.3	0.3	7.5	0.8 ±0.1

chanhvinh.com

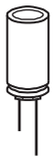

B41858

Low impedance – 105 °C

J leads

Last 3 digits of ordering code: 004

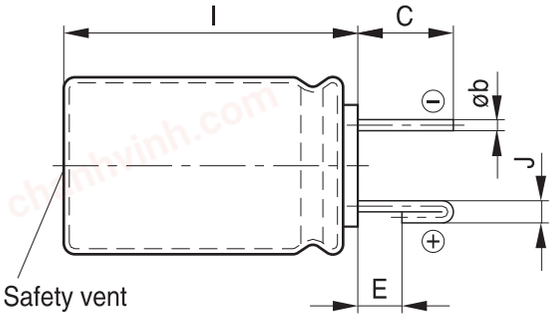

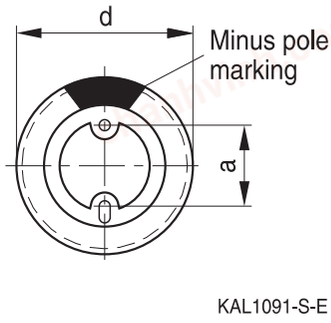

The series B41897 and B41898 have no sleeve nor minus pole marking, the positive pole is marked on the aluminum case side instead.

Suggestion for PCB hole diameter

Suggestion for PCB hole diameter, wire ø0.6 mm

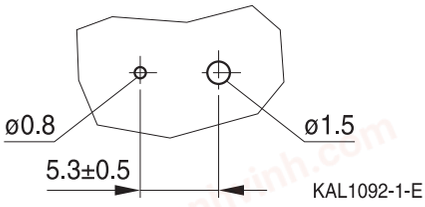

Suggestion for PCB hole diameter, wire ø0.8 mm

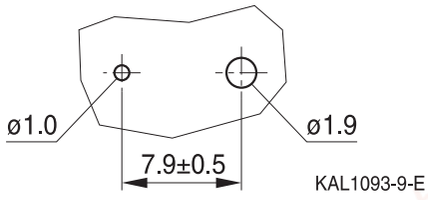

Case size	Dimensions (mm)				
d × l (mm)	C ±0.5	E ±0.5	J ±0.2	a ±0.5	∅b
10 × 12.5	3.2	0.7	1.2	5.0	0.6 ±0.05
10 × 16	3.2	0.7	1.2	5.0	0.6 ±0.05
10 × 20	3.2	0.7	1.2	5.0	0.6 ±0.05
12.5 × 20	3.2	0.7	1.2	5.0	0.6 ±0.05
12.5 × 25	3.2	0.7	1.2	5.0	0.6 ±0.05
16 × 20	3.5	0.7	1.6	7.5	0.8 ±0.05
16 × 25	3.5	0.7	1.6	7.5	0.8 ±0.05
16 × 31.5	3.5	0.7	1.6	7.5	0.8 ±0.05
16 × 35.5	3.5	0.7	1.6	7.5	0.8 ±0.05
16 × 40	3.5	0.7	1.6	7.5	0.8 ±0.05
18 × 20	3.5	0.7	1.6	7.5	0.8 ±0.1
18 × 25	3.5	0.7	1.6	7.5	0.8 ±0.1
18 × 31.5	3.5	0.7	1.6	7.5	0.8 ±0.1
18 × 35	3.5	0.7	1.6	7.5	0.8 ±0.1

chanhvinh.com

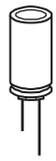

Bent 90° leads for horizontal mounting pinning

Last 3 digits of ordering code: 012

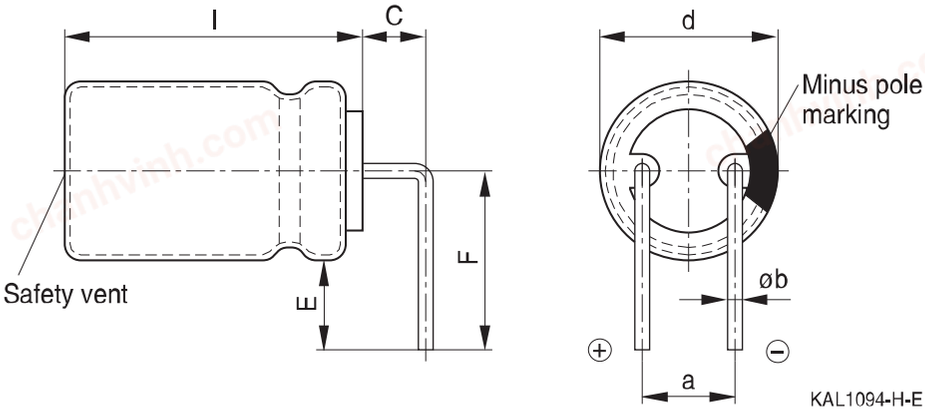

The series B41897 and B41898 have no sleeve nor minus pole marking, the positive pole is marked on the aluminum case side instead.

Case size	Dimensions (mm)				
d × l (mm)	C ±0.5	E ±0.5	F ±0.5	a ±0.5	∅b
16 × 20	4.0	4.0	12.0	7.5	0.8 ±0.05
16 × 25	4.0	4.0	12.0	7.5	0.8 ±0.05
16 × 31.5	4.0	4.0	12.0	7.5	0.8 ±0.05
16 × 35.5	4.0	4.0	12.0	7.5	0.8 ±0.05
16 × 40	4.0	4.0	13.0	7.5	0.8 ±0.05
18 × 20	4.0	4.0	13.0	7.5	0.8 ±0.1
18 × 25	4.0	4.0	13.0	7.5	0.8 ±0.1
18 × 31.5	4.0	4.0	13.0	7.5	0.8 ±0.1
18 × 35	4.0	4.0	13.0	7.5	0.8 ±0.1
18 × 40	4.0	4.0	13.0	7.5	0.8 ±0.1

Bent leads for diameter 12.5 mm available upon request.

chanhvinh.com

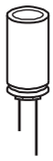

B41858

Low impedance – 105 °C

Packing units and box dimensions

Ammo pack

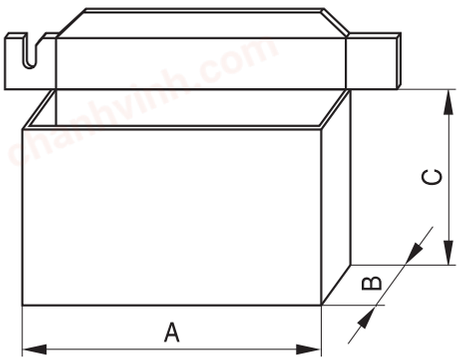

Case size d × l mm	Dimensions (mm) A_{max}	B_{max}	C_{max}	Packing units pcs.
8 × 11.5	345	60	240	1000
10 × 12.5	345	60	280	750
10 × 16	345	65	200	500
10 × 20	345	65	200	500
12.5 × 20	345	65	260	500
12.5 × 25	345	70	260	500
16 × 20	325	65	285	300
16 × 25	325	65	285	300
16 × 31.5	325	80	275	300
18 × 20	325	65	285	250
18 × 25	325	65	285	250
18 × 31.5	325	80	275	250

chanhvinh.com

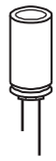

Overview of packing units and code numbers

						PAPR		
Case size d × l mm	Standard, bulk pcs.	Taped, Ammo pack pcs.			Kinked leads, bulk pcs.	Cut leads, bulk pcs.	Crimped leads, blister pcs.	J leads, blister pcs.	Bent 90° leads, blister pcs.
8 × 11.5	1000	1000			–	–	–	–	
10 × 12.5	1000	750			–	1000	–	900	
10 × 16	1000	500			–	1000	–	675	
10 × 20	500	500			500	500	–	500	
12.5 × 20	350	500			350	350	–	300	1)
12.5 × 25	250	500			500	500	–	225	1)
16 × 20	250	300			200	200	200	200	420
16 × 25	250	300			200	200	216	216	216
16 × 31.5	200	300			250	250	180	180	180
16 × 35.5	100	–			100	100	150	150	150
16 × 40	125	–			100	100	72	72	72
18 × 20	175	250			175	175	200	200	420
18 × 25	150	250			150	150	200	200	200
18 × 31.5	100	250			100	100	150	150	150
18 × 35	100	–			100	100	150	150	150
18 × 40	125	–			100	100	72	–	72
The last three digits of the complete ordering code state the lead configuration	**000**	Code **006** **008** **009**	F (mm) 3.5 5 7.5	d (mm) 8 8...12.5 16...18	**001**	**002**	**003**	**004**	**012**

1) Available upon request

chanhvinh.com

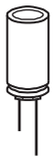

B41858

Low impedance – 105 °C

Cautions and warnings

Personal safety

The electrolytes used have been optimized both with a view to the intended application and with regard to health and environmental compatibility. They do not contain any solvents that are detrimental to health, e.g. dimethyl formamide (DMF) or dimethyl acetamide (DMAC). Furthermore, some of the high-voltage electrolytes used are self-extinguishing.

As far as possible, we do not use any dangerous chemicals or compounds to produce operating electrolytes, although in exceptional cases, such materials must be used in order to achieve specific physical and electrical properties because no alternative materials are currently known. We do, however, restrict the amount of dangerous materials used in our products to an absolute minimum.

Materials and chemicals used in our aluminum electrolytic capacitors are continuously adapted in compliance with the TDK Electronics Corporate Environmental Policy and the latest EU regulations and guidelines such as RoHS, REACH/SVHC, GADSL, and ELV.

MDS (Material Data Sheets) are available on our website for all types listed in the data book.
MDS for customer specific capacitors are available upon request.
MSDS (Material Safety Data Sheets) are available for our electrolytes upon request.

Nevertheless, the following rules should be observed when handling aluminum electrolytic capacitors: No electrolyte should come into contact with eyes or skin. If electrolyte does come into contact with the skin, wash the affected areas immediately with running water. If the eyes are affected, rinse them for 10 minutes with plenty of water. If symptoms persist, seek medical treatment. Avoid inhaling electrolyte vapor or mists. Workplaces and other affected areas should be well ventilated. Clothing that has been contaminated by electrolyte must be changed and rinsed in water.

chanhvinh.com

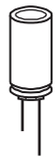

Product safety

The table below summarizes the safety instructions that must be observed without fail. A detailed description can be found in the relevant sections of seperate file chapter "General technical information".

Topic	Safety information	Reference chapter "General technical information"
Polarity	Make sure that polar capacitors are connected with the right polarity.	1 "Basic construction of aluminum electrolytic capacitors"
Reverse voltage	Voltages of opposite polarity should be prevented by connecting a diode.	3.1.6 "Reverse voltage"
Mounting position of screw-terminal capacitors	Screw terminal capacitors must not be mounted with terminals facing down unless otherwise specified.	11.1. "Mounting positions of capacitors with screw terminals"
Robustness of terminals	The following maximum tightening torques must not be exceeded when connecting screw terminals: M5: 2.5 Nm M6: 4.0 Nm	11.3 "Mounting torques"
Mounting of single-ended capacitors	The internal structure of single-ended capacitors might be damaged if excessive force is applied to the lead wires. Avoid any compressive, tensile or flexural stress. Do not move the capacitor after soldering to PC board. Do not pick up the PC board by the soldered capacitor. Do not insert the capacitor on the PC board with a hole space different to the lead space specified.	11.4 "Mounting considerations for single-ended capacitors"
Soldering	Do not exceed the specified time or temperature limits during soldering.	11.5 "Soldering"
Soldering, cleaning agents	Do not allow halogenated hydrocarbons to come into contact with aluminum electrolytic capacitors.	11.6 "Cleaning agents"
Upper category temperature	Do not exceed the upper category temperature.	7.2 "Maximum permissible operating temperature"
Passive flammability	Avoid external energy, e.g. fire.	8.1 "Passive flammability"

chanhvinh.com

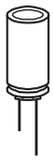

B41858

Low impedance – 105 °C

Topic	Safety information	Reference chapter "General technical information"
Active flammability	Avoid overload of the capacitors.	8.2 "Active flammability"
Maintenance	Make periodic inspections of the capacitors. Before the inspection, make sure that the power supply is turned off and carefully discharge the capacitors. Do not apply excessive mechanical stress to the capacitor terminals when mounting.	10 "Maintenance"
Storage	Do not store capacitors at high temperatures or high humidity. Capacitors should be stored at +5 to +35 °C and a relative humidity of ≤ 75%.	7.3 "Shelf life and storage conditions"
		Reference chapter "Capacitors with screw terminals"
Breakdown strength of insulating sleeves	Do not damage the insulating sleeve, especially when ring clips are used for mounting.	"Screw terminals – accessories"

Display of ordering codes for TDK Electronics products

The ordering code for one and the same product can be represented differently in data sheets, data books, other publications, on the company website, or in order-related documents such as shipping notes, order confirmations and product labels. The varying representations of the ordering codes are due to different processes employed and do not affect the specifications of the respective products.
Detailed information can be found on the Internet under
www.tdk-electronics.tdk.com/orderingcodes.

chanhvinh.com

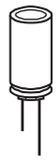

Symbols and terms

Symbol	English	German
C	Capacitance	Kapazität
C_R	Rated capacitance	Nennkapazität
C_S	Series capacitance	Serienkapazität
$C_{S,T}$	Series capacitance at temperature T	Serienkapazität bei Temperatur T
C_f	Capacitance at frequency f	Kapazität bei Frequenz f
d	Case diameter, nominal dimension	Gehäusedurchmesser, Nennmaß
d_{max}	Maximum case diameter	Maximaler Gehäusedurchmesser
ESL	Self-inductance	Eigeninduktivität
ESR	Equivalent series resistance	Ersatzserienwiderstand
ESR_f	Equivalent series resistance at frequency f	Ersatzserienwiderstand bei Frequenz f
ESR_T	Equivalent series resistance at temperature T	Ersatzserienwiderstand bei Temperatur T
f	Frequency	Frequenz
I	Current	Strom
I_{AC}	Alternating current (ripple current)	Wechselstrom
$I_{AC,RMS}$	Root-mean-square value of alternating current	Wechselstrom, Effektivwert
$I_{AC,f}$	Ripple current at frequency f	Wechselstrom bei Frequenz f
$I_{AC,max}$	Maximum permissible ripple current	Maximal zulässiger Wechselstrom
$I_{AC,R}$	Rated ripple current	Nennwechselstrom
I_{leak}	Leakage current	Reststrom
$I_{leak,op}$	Operating leakage current	Betriebsreststrom
l	Case length, nominal dimension	Gehäuselänge, Nennmaß
l_{max}	Maximum case length (without terminals and mounting stud)	Maximale Gehäuselänge (ohne Anschlüsse und Gewindebolzen)
R	Resistance	Widerstand
R_{ins}	Insulation resistance	Isolationswiderstand
R_{symm}	Balancing resistance	Symmetrierwiderstand
T	Temperature	Temperatur
ΔT	Temperature difference	Temperaturdifferenz
T_A	Ambient temperature	Umgebungstemperatur
T_C	Case temperature	Gehäusetemperatur
T_B	Capacitor base temperature	Temperatur des Gehäusebodens
t	Time	Zeit
Δt	Period	Zeitraum
t_b	Service life (operating hours)	Brauchbarkeitsdauer (Betriebszeit)

chanhvinh.com

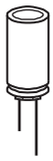

B41858

Low impedance – 105 °C

Symbol	English	German
V	Voltage	Spannung
V_F	Forming voltage	Formierspannung
V_{op}	Operating voltage	Betriebsspannung
V_R	Rated voltage, DC voltage	Nennspannung, Gleichspannung
V_S	Surge voltage	Spitzenspannung
X_C	Capacitive reactance	Kapazitiver Blindwiderstand
X_L	Inductive reactance	Induktiver Blindwiderstand
Z	Impedance	Scheinwiderstand
Z_T	Impedance at temperature T	Scheinwiderstand bei Temperatur T
tan δ	Dissipation factor	Verlustfaktor
λ	Failure rate	Ausfallrate
ε_0	Absolute permittivity	Elektrische Feldkonstante
ε_r	Relative permittivity	Dielektrizitätszahl
ω	Angular velocity; 2 · π · f	Kreisfrequenz; 2 · π · f

Note

All dimensions are given in mm.

chanhvinh.com

Important notes

The following applies to all products named in this publication:

1. Some parts of this publication contain **statements about the suitability of our products for certain areas of application**. These statements are based on our knowledge of typical requirements that are often placed on our products in the areas of application concerned. We nevertheless expressly point out **that such statements cannot be regarded as binding statements about the suitability of our products for a particular customer application**. As a rule, we are either unfamiliar with individual customer applications or less familiar with them than the customers themselves. For these reasons, it is always ultimately incumbent on the customer to check and decide whether a product with the properties described in the product specification is suitable for use in a particular customer application.
2. We also point out that **in individual cases, a malfunction of electronic components or failure before the end of their usual service life cannot be completely ruled out in the current state of the art, even if they are operated as specified**. In customer applications requiring a very high level of operational safety and especially in customer applications in which the malfunction or failure of an electronic component could endanger human life or health (e.g. in accident prevention or lifesaving systems), it must therefore be ensured by means of suitable design of the customer application or other action taken by the customer (e.g. installation of protective circuitry or redundancy) that no injury or damage is sustained by third parties in the event of malfunction or failure of an electronic component.
3. **The warnings, cautions and product-specific notes must be observed.**
4. In order to satisfy certain technical requirements, **some of the products described in this publication may contain substances subject to restrictions in certain jurisdictions (e.g. because they are classed as hazardous)**. Useful information on this will be found in our Material Data Sheets on the Internet (www.tdk-electronics.tdk.com/material). Should you have any more detailed questions, please contact our sales offices.
5. We constantly strive to improve our products. Consequently, **the products described in this publication may change from time to time**. The same is true of the corresponding product specifications. Please check therefore to what extent product descriptions and specifications contained in this publication are still applicable before or when you place an order. We also **reserve the right to discontinue production and delivery of products**. Consequently, we cannot guarantee that all products named in this publication will always be available. The aforementioned does not apply in the case of individual agreements deviating from the foregoing for customer-specific products.
6. Unless otherwise agreed in individual contracts, **all orders are subject to our General Terms and Conditions of Supply**.

chanhvinh.com

chanhvinh.com

Important notes

7. **Our manufacturing sites serving the automotive business apply the IATF 16949 standard.** The IATF certifications confirm our compliance with requirements regarding the quality management system in the automotive industry. Referring to customer requirements and customer specific requirements (“CSR”) TDK always has and will continue to have the policy of respecting individual agreements. Even if IATF 16949 may appear to support the acceptance of unilateral requirements, we hereby like to emphasize that **only requirements mutually agreed upon can and will be implemented in our Quality Management System.** For clarification purposes we like to point out that obligations from IATF 16949 shall only become legally binding if individually agreed upon.
8. The trade names EPCOS, CeraCharge, CeraDiode, CeraLink, CeraPad, CeraPlas, CSMP, CTVS, DeltaCap, DigiSiMic, ExoCore, FilterCap, FormFit, LeaXield, MiniBlue, MiniCell, MKD, MKK, MotorCap, PCC, PhaseCap, PhaseCube, PhaseMod, PhiCap, PowerHap, PQSine, PQvar, SIFERRIT, SIFI, SIKOREL, SilverCap, SIMDAD, SiMic, SIMID, SineFormer, SIOV, ThermoFuse, WindCap are **trademarks registered or pending** in Europe and in other countries. Further information will be found on the Internet at www.tdk-electronics.tdk.com/trademarks.

Release 2018-10