chanhvinh.com

# Aluminum electrolytic capacitors

## Axial-lead and soldering star capacitors, very high ripple current – up to 150 °C

**Series/Type:** **B41687, B41787**

Date: June 2024

© TDK Electronics AG 2024. Reproduction, publication and dissemination of this publication, enclosures hereto and the information contained therein without TDK Electronics' prior express consent is prohibited.

chanhvinh.com





## Applications

- Automotive electronics

## Features

- Very high ripple current capability, optimized for heat-sink applications
- Vibration stability up to 60 *g* available upon request
- Useful life, 4000 h at up to 125 °C
- Low ESR at high frequency
- SIKOREL design – storage for up to 15 years at a temperature of up to 35 °C
- RoHS-compatible

## Construction

- Charge/discharge-proof, polar
- Aluminum case without sleeve
- Negative pole connected to case
- Version with PET sleeve available upon request

## Terminals

- Axial leads, welded to capacitor case and cover disc
- Soldering star option for upright mounting on PCB or welding to busbar
- Alternative axial-lead design with double-sided plates for horizontal mounting available upon request

## Taping and packing

- Axial-lead capacitors will be delivered in pallet package
  Capacitors with d x l ≤ 16 x 39 mm are also available taped on reel
- Soldering star capacitors are packed in blister trays

chanhvinh.com



## Specifications and characteristics in brief

| | | | | | |
|---|---|---|---|---|---|
| Rated voltage $V_R$<br>Surge voltage $V_S$ | 25 ... 63 V DC<br>1.15 · $V_R$ | | | | |
| Rated capacitance $C_R$<br>Capacitance tolerance | 510 ... 4800 µF<br>–10/+30% ≙ Q | | | | |
| Leakage current $I_{leak}$<br>(5 min, 20 °C) | $I_{leak} \leq 0.006\ \mu A \cdot \left(\frac{C_R}{\mu F} \cdot \frac{V_R}{V}\right) + 4\ \mu A$ | | | | |
| Self-inductance ESL[1] | Diameter d (mm) | | 16 | 18 | 21 |
| | Terminals | Length l (mm) | Approx. ESL (nH) | | |
| | axial | 25 | 26 | 30 | – |
| | | 30 | 29 | 34 | 39 |
| | | 35 | 31 | 36 | 41 |
| | | 39 | 33 | 38 | 45 |
| | | 49 | – | – | 50 |
| | soldering star | 25 | 7 | 8 | – |
| | | 30 | 8 | 10 | 11 |
| | | 35 | 9 | 10.5 | 12 |
| | | 39 | 9 | 11 | 13 |
| | | 49 | – | – | 14 |
| Useful life[2]<br>$T_A$ = 125 °C; $V_R$; $I_{AC,R}$<br>$T_C$ = 125 °C; $V_R$; $I_{AC,max}$ | <br>> 4000 h<br>> 2000 h | Requirements:<br>\|ΔC/C\| ≤ 30% of initial value<br>ESR ≤ 3 times initial specified limit[3]<br>$I_{leak}$ ≤ initial specified limit | | | |
| Voltage endurance test<br>125 °C; $V_R$ | 4000 h for $V_R \leq 35$ V DC<br>3000 h for $V_R$ = 63 V DC | Post test requirements:<br>\|ΔC/C\| ≤ 10% of initial value<br>ESR ≤ 1.3 times initial specified limit[3]<br>$I_{leak}$ ≤ initial specified limit | | | |
| Vibration resistance test | To IEC 60068-2-6:2007, test Fc:<br>Frequency range 10 Hz ... 2 kHz, displacement amplitude max. 1.5 mm, acceleration max. 20 *g*, duration 3 x 2 h.<br>Capacitor rigidly clamped by the aluminum case e.g. using our standard fixture. | | | | |
| IEC climatic category | To IEC 60068-1:2013: 55/125/56 (–55 °C/+125 °C/56 days damp heat test) | | | | |
| Sectional specification | IEC 60384-4:2016[4] | | | | |
| Reference standard | AEC-Q200 REV D[5] | | | | |

1) If optimum circuit design is used, the values are lower by 30%.
2) Refer to chapter "General technical information, 5 Useful life" on how to interpret useful life.
3) $ESR_{max}$ at 100 Hz, 20 °C
4) Refer to chapter "General technical information, 2 Standards and specifications" for further details.
5) Refer to chapter "General technical information, 2.3 AEC-Q200 standard" for further details.

chanhvinh.com



## B41687, Axial-lead capacitors

### Dimensional drawing

For d ≤ 18 mm:

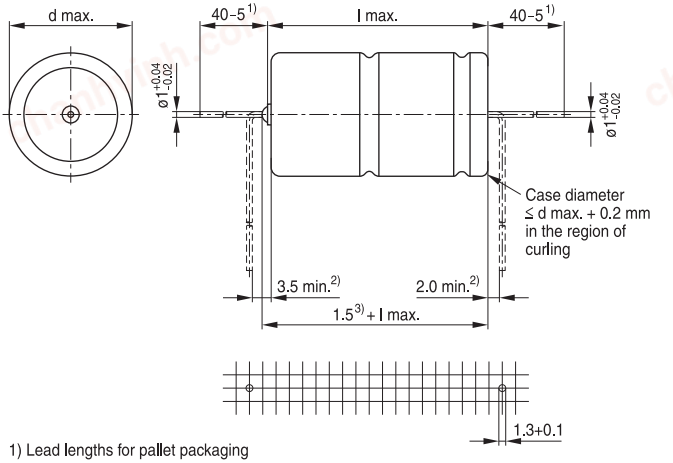


1) Lead lengths for pallet packaging
2) Minimum bending distance recommended per wire
3) Maximum length of welding projection

KAL1783-A-E

For d = 21 mm:

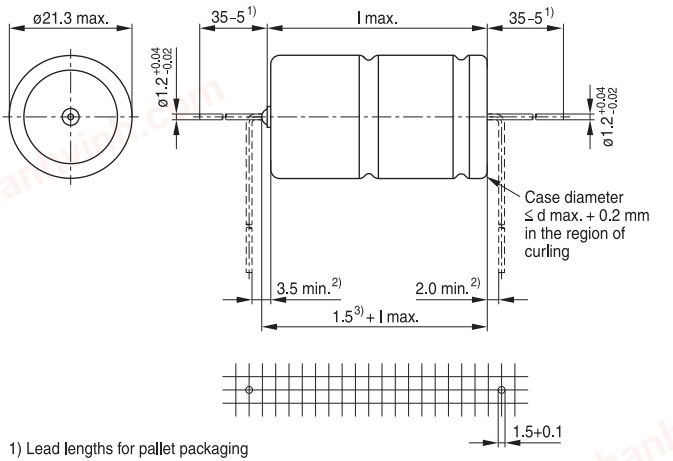


1) Lead lengths for pallet packaging
2) Minimum bending distance recommended per wire
3) Maximum length of welding projection

KAL1869-G-E

chanhvinh.com



### Dimensions, weights and packaging units

| d x l | $d_{max}$ x $l_{max}$ | Approx. weight | Packing units (pcs.) | |
|---|---|---|---|---|
| mm | mm | g | Pallet | Reel |
| 16 x 25 | 16.3 x 25.4 | 7.4 | 180 | 250 |
| 16 x 30 | 16.3 x 30.4 | 8.9 | 180 | 250 |
| 16 x 35 | 16.3 x 35.4 | 10.4 | 180 | 250 |
| 16 x 39 | 16.3 x 39.9 | 11.7 | 180 | 250 |
| 18 x 25 | 18.3 x 25.4 | 9.3 | 160 | – |
| 18 x 30 | 18.3 x 30.4 | 11.1 | 160 | – |
| 18 x 35 | 18.3 x 35.4 | 12.8 | 160 | – |
| 18 x 39 | 18.3 x 39.9 | 14.7 | 160 | – |
| 21 x 30 | 21.3 x 30.4 | 16.5 | 140 | – |
| 21 x 35 | 21.3 x 35.4 | 17.0 | 140 | – |
| 21 x 39 | 21.3 x 39.9 | 20.0 | 140 | – |
| 21 x 49 | 21.3 x 49.9 | 25.0 | 110 | – |

chanhvinh.com



## B41787, Soldering star capacitors

### Dimensional drawings

Mounting holes d = 16 mm ... 18 mm

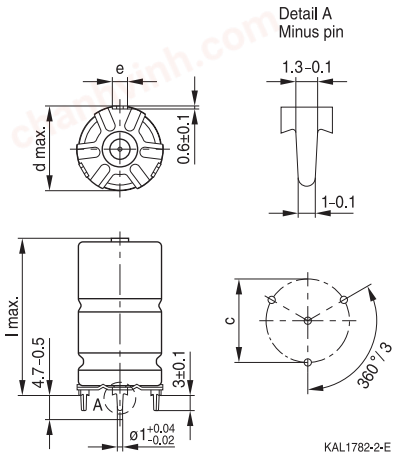


Mounting holes d = 21 mm

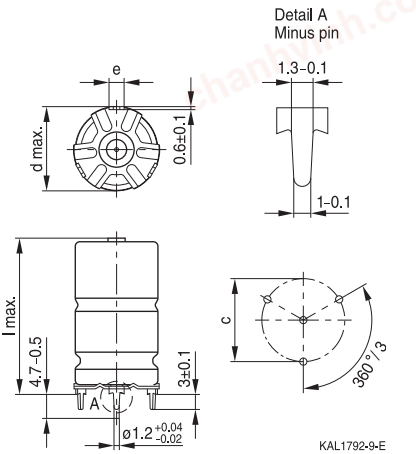


### Dimensions, weights and packaging units

| d x l<br>mm | $d_{max}$ x $l_{max}$<br>mm | c ±0.1<br>mm | e ±0.1<br>mm | Approx. weight<br>g | Packing units<br>pcs. |
|---|---|---|---|---|---|
| 16 x 25 | 17.5 x 27 | 16.5 | 3.0 | 7.9 | 300 |
| 16 x 30 | 17.5 x 32 | 16.5 | 3.0 | 9.4 | 300 |
| 16 x 35 | 17.5 x 37 | 16.5 | 3.0 | 10.9 | 200 |
| 16 x 39 | 17.5 x 41.5 | 16.5 | 3.0 | 12.2 | 200 |
| 18 x 25 | 19.5 x 27 | 18.5 | 3.0 | 9.9 | 300 |
| 18 x 30 | 19.5 x 32 | 18.5 | 3.0 | 11.8 | 300 |
| 18 x 35 | 19.5 x 37 | 18.5 | 3.0 | 13.2 | 200 |
| 18 x 39 | 19.5 x 41.5 | 18.5 | 3.0 | 15.4 | 200 |
| 21 x 30 | 22.5 x 32 | 21.5 | 3.5 | 17.5 | 468 |
| 21 x 35 | 22.5 x 37 | 21.5 | 3.5 | 18.3 | 324 |
| 21 x 39 | 22.5 x 41.5 | 21.5 | 3.5 | 21.0 | 324 |
| 21 x 49 | 22.5 x 51.5 | 21.5 | 3.5 | 26.0 | 264 |

chanhvinh.com



## Overview of available types

| $V_R$ (V DC) | 25 | 35 | 63 |
|---|---|---|---|
| | Case dimensions d x l (mm) | | |
| $C_R$ (µF) | | | |
| 510 | | | 16 x 25 |
| 620 | | | 16 x 25 |
| 680 | | | 16 x 30<br>18 x 25 |
| 750 | | 16 x 25 | 18 x 25 |
| 820 | | | 16 x 30<br>16 x 35 |
| 910 | | 18 x 25 | 18 x 30 |
| 1000 | 16 x 25 | 16 x 30 | 16 x 35<br>16 x 39<br>18 x 30 |
| 1100 | | | 18 x 35 |
| 1200 | | 16 x 35 | 16 x 39 |
| 1300 | 16 x 30<br>18 x 25 | 18 x 30 | 18 x 35<br>18 x 39<br>21 x 30 |
| 1500 | | 16 x 39 | 18 x 39<br>21 x 30 |
| 1600 | | 18 x 35 | |
| 1700 | 16 x 35<br>18 x 30 | | 21 x 35 |
| 1800 | | 21 x 30 | |
| 1900 | | 18 x 39 | 21 x 35<br>21 x 39 |
| 2000 | 16 x 39 | | |
| 2100 | 18 x 35 | | |
| 2200 | | 21 x 35 | 21 x 39 |
| 2400 | 21 x 30 | | |
| 2500 | 18 x 39 | | |
| 2600 | | | 21 x 49 |
| 2700 | | 21 x 39 | |
| 3000 | 21 x 35 | | 21 x 49 |
| 3600 | 21 x 39 | 21 x 49 | |
| 4800 | 21 x 49 | | |

chanhvinh.com



## Case dimensions and ordering codes

| $C_R$ 100 Hz 20 °C µF | Case dimensions d x l mm | Ordering code Axial pallet | Ordering code Axial reel | Ordering code Soldering star |
|---|---|---|---|---|
| $V_R$ = 25 V DC | | | | |
| 1000 | 16 x 25 | B41687A5108Q001 | B41687A5108Q003 | B41787A5108Q001 |
| 1300 | 16 x 30 | B41687A5138Q001 | B41687A5138Q003 | B41787A5138Q001 |
| 1300 | 18 x 25 | B41687B5138Q001 | | B41787B5138Q001 |
| 1700 | 16 x 35 | B41687A5178Q001 | B41687A5178Q003 | B41787A5178Q001 |
| 1700 | 18 x 30 | B41687B5178Q001 | | B41787B5178Q001 |
| 2000 | 16 x 39 | B41687A5208Q001 | B41687A5208Q003 | B41787A5208Q001 |
| 2100 | 18 x 35 | B41687A5218Q001 | | B41787A5218Q001 |
| 2400 | 21 x 30 | B41687A5248Q001 | | B41787A5248Q001 |
| 2500 | 18 x 39 | B41687A5258Q001 | | B41787A5258Q001 |
| 3000 | 21 x 35 | B41687A5308Q001 | | B41787A5308Q001 |
| 3600 | 21 x 39 | B41687A5368Q001 | | B41787A5368Q001 |
| 4800 | 21 x 49 | B41687A5488Q001 | | B41787A5488Q001 |
| $V_R$ = 35 V DC | | | | |
| 750 | 16 x 25 | B41687A7757Q001 | B41687A7757Q003 | B41787A7757Q001 |
| 910 | 18 x 25 | B41687A7917Q001 | | B41787A7917Q001 |
| 1000 | 16 x 30 | B41687A7108Q001 | B41687A7108Q003 | B41787A7108Q001 |
| 1200 | 16 x 35 | B41687A7128Q001 | B41687A7128Q003 | B41787A7128Q001 |
| 1300 | 18 x 30 | B41687A7138Q001 | | B41787A7138Q001 |
| 1500 | 16 x 39 | B41687A7158Q001 | B41687A7158Q003 | B41787A7158Q001 |
| 1600 | 18 x 35 | B41687A7168Q001 | | B41787A7168Q001 |
| 1800 | 21 x 30 | B41687A7188Q001 | | B41787A7188Q001 |
| 1900 | 18 x 39 | B41687A7198Q001 | | B41787A7198Q001 |
| 2200 | 21 x 35 | B41687A7228Q001 | | B41787A7228Q001 |
| 2700 | 21 x 39 | B41687A7278Q001 | | B41787A7278Q001 |
| 3600 | 21 x 49 | B41687A7368Q001 | | B41787A7368Q001 |

chanhvinh.com



| $C_R$ 100 Hz 20 °C µF | Case dimensions d x l mm | Ordering code Axial pallet | Ordering code Axial reel | Ordering code Soldering star |
|---|---|---|---|---|
| $V_R$ = 63 V DC | | | | |
| 510 | 16 x 25 | B41687E8517Q001 | B41687E8517Q003 | B41787E8517Q001 |
| 620 | 16 x 25 | B41687G8627Q001 | B41687G8627Q003 | B41787G8627Q001 |
| 680 | 16 x 30 | B41687E8687Q001 | B41687E8687Q003 | B41787E8687Q001 |
| 680 | 18 x 25 | B41687F8687Q001 | | B41787F8687Q001 |
| 750 | 18 x 25 | B41687G8757Q001 | | B41787G8757Q001 |
| 820 | 16 x 30 | B41687G8827Q001 | B41687G8827Q003 | B41787G8827Q001 |
| 820 | 16 x 35 | B41687E8827Q001 | B41687E8827Q003 | B41787E8827Q001 |
| 910 | 18 x 30 | B41687E8917Q001 | | B41787E8917Q001 |
| 1000 | 16 x 35 | B41687G8108Q001 | B41687G8108Q003 | B41787G8108Q001 |
| 1000 | 16 x 39 | B41687E8108Q001 | B41687E8108Q003 | B41787E8108Q001 |
| 1000 | 18 x 30 | B41687H8108Q001 | | B41787H8108Q001 |
| 1100 | 18 x 35 | B41687E8118Q001 | | B41787E8118Q001 |
| 1200 | 16 x 39 | B41687G8128Q001 | B41687G8128Q003 | B41787G8128Q001 |
| 1300 | 18 x 35 | B41687G8138Q001 | | B41787G8138Q001 |
| 1300 | 18 x 39 | B41687E8138Q001 | | B41787E8138Q001 |
| 1300 | 21 x 30 | B41687F8138Q001 | | B41787F8138Q001 |
| 1500 | 18 x 39 | B41687G8158Q001 | | B41787G8158Q001 |
| 1500 | 21 x 30 | B41687H8158Q001 | | B41787H8158Q001 |
| 1700 | 21 x 35 | B41687E8178Q001 | | B41787E8178Q001 |
| 1900 | 21 x 35 | B41687G8198Q001 | | B41787G8198Q001 |
| 1900 | 21 x 39 | B41687E8198Q001 | | B41787E8198Q001 |
| 2200 | 21 x 39 | B41687G8228Q001 | | B41787G8228Q001 |
| 2600 | 21 x 49 | B41687E8268Q001 | | B41787E8268Q001 |
| 3000 | 21 x 49 | B41687G8308Q001 | | B41787G8308Q001 |

chanhvinh.com



## Technical data

| $C_R$ 100 Hz 20 °C µF | Case dimensions d x l mm | $ESR_{max}$ 100 Hz 20 °C mΩ | $ESR_{max}$ 100 Hz –40 °C mΩ | $ESR_{max}$ 10 kHz 20 °C mΩ | $I_{AC,R}$ 10 kHz $T_A$ 125 °C A | $I_{AC,max}$ [1) 2)] 10 kHz $T_C$ 125 °C A |
|---|---|---|---|---|---|---|
| $V_R$ = 25 V DC | | | | | | |
| 1000 | 16 x 25 | 98 | 565 | 30 | 5.9 | 14.1 |
| 1300 | 16 x 30 | 75 | 435 | 23 | 7.3 | 16.8 |
| 1300 | 18 x 25 | 80 | 470 | 26 | 7.0 | 17.1 |
| 1700 | 16 x 35 | 65 | 377 | 18 | 8.6 | 18.9 |
| 1700 | 18 x 30 | 57 | 332 | 19 | 8.5 | 20.2 |
| 2000 | 16 x 39 | 55 | 314 | 16 | 9.6 | 20.7 |
| 2100 | 18 x 35 | 52 | 304 | 16 | 10.0 | 22.8 |
| 2400 | 21 x 30 | 46 | 256 | 15 | 10.9 | 26.9 |
| 2500 | 18 x 39 | 44 | 257 | 14 | 11.1 | 24.7 |
| 3000 | 21 x 35 | 37 | 204 | 12 | 12.6 | 30.2 |
| 3600 | 21 x 39 | 31 | 172 | 11 | 14.1 | 32.8 |
| 4800 | 21 x 49 | 23 | 126 | 8 | 17.3 | 37.3 |
| $V_R$ = 35 V DC | | | | | | |
| 750 | 16 x 25 | 119 | 580 | 30 | 5.9 | 14.1 |
| 910 | 18 x 25 | 97 | 479 | 26 | 7.0 | 17.1 |
| 1000 | 16 x 30 | 92 | 450 | 23 | 7.3 | 16.8 |
| 1200 | 16 x 35 | 80 | 393 | 18 | 8.5 | 18.9 |
| 1300 | 18 x 30 | 72 | 354 | 19 | 8.5 | 20.2 |
| 1500 | 16 x 39 | 67 | 324 | 16 | 9.6 | 20.7 |
| 1600 | 18 x 35 | 58 | 287 | 16 | 10.0 | 22.8 |
| 1800 | 21 x 30 | 53 | 249 | 15 | 10.9 | 26.9 |
| 1900 | 18 x 39 | 49 | 242 | 14 | 11.1 | 24.7 |
| 2200 | 21 x 35 | 42 | 198 | 12 | 12.6 | 30.2 |
| 2700 | 21 x 39 | 36 | 167 | 11 | 14.1 | 32.8 |
| 3600 | 21 x 49 | 26 | 124 | 8 | 17.3 | 37.3 |

1) Maximum ripple current at 125 °C capacitor case temperature $T_C$ (measurement at aluminum case surface), when mounted to a heat sink. Further details available upon request.
2) To achieve the maximum listed current, special care must be taken in the connection of the capacitor to the circuit as it depends on user assembly.

chanhvinh.com



| $C_R$ 100 Hz 20 °C µF | Case dimensions d x l mm | $ESR_{max}$ 100 Hz 20 °C mΩ | $ESR_{max}$ 100 Hz –40 °C mΩ | $ESR_{max}$ 10 kHz 20 °C mΩ | $I_{AC,R}$ 10 kHz $T_A$ 125 °C A | $I_{AC,max}$ [1) 2)] 10 kHz $T_C$ 125 °C A |
|---|---|---|---|---|---|---|
| $V_R$ = 63 V DC | | | | | | |
| 510 | 16 x 25 | 157 | 575 | 49 | 5.7 | 17.6 |
| 620 | 16 x 25 | 157 | 575 | 49 | 5.6 | 16.5 |
| 680 | 16 x 30 | 128 | 474 | 40 | 6.7 | 20.0 |
| 680 | 18 x 25 | 106 | 389 | 33 | 7.4 | 23.6 |
| 750 | 18 x 25 | 106 | 389 | 33 | 6.7 | 20.5 |
| 820 | 16 x 30 | 128 | 474 | 40 | 6.5 | 19.6 |
| 820 | 16 x 35 | 100 | 371 | 31 | 8.0 | 23.0 |
| 910 | 18 x 30 | 87 | 319 | 27 | 8.7 | 26.9 |
| 1000 | 16 x 35 | 100 | 371 | 31 | 7.9 | 22.3 |
| 1000 | 16 x 39 | 80 | 290 | 25 | 9.3 | 26.0 |
| 1000 | 18 x 30 | 87 | 319 | 27 | 8.2 | 24.4 |
| 1100 | 18 x 35 | 71 | 256 | 22 | 10.0 | 29.8 |
| 1200 | 16 x 39 | 80 | 290 | 25 | 9.1 | 24.4 |
| 1300 | 18 x 35 | 71 | 256 | 22 | 9.7 | 27.7 |
| 1300 | 18 x 39 | 58 | 218 | 18 | 11.4 | 32.9 |
| 1300 | 21 x 30 | 74 | 271 | 23 | 9.8 | 31.0 |
| 1500 | 18 x 39 | 58 | 218 | 18 | 10.9 | 30.3 |
| 1500 | 21 x 30 | 74 | 271 | 23 | 9.0 | 27.7 |
| 1700 | 21 x 35 | 61 | 223 | 19 | 11.2 | 34.2 |
| 1900 | 21 x 35 | 61 | 223 | 19 | 10.5 | 30.9 |
| 1900 | 21 x 39 | 52 | 183 | 16 | 12.5 | 37.3 |
| 2200 | 21 x 39 | 52 | 183 | 16 | 12.0 | 34.1 |
| 2600 | 21 x 49 | 36 | 133 | 11 | 16.0 | 43.0 |
| 3000 | 21 x 49 | 36 | 133 | 11 | 15.2 | 38.0 |

1) Maximum ripple current at 125 °C capacitor case temperature $T_C$ (measurement at aluminum case surface), when mounted to a heat sink. Further details available upon request.
2) To achieve the maximum listed current, special care must be taken in the connection of the capacitor to the circuit as it depends on user assembly.

**Useful life[3)]**

Calculations of useful life are performed on request, based on operational conditions stated by the customer.

3) Refer to chapter “General technical information, 5 Useful life” on how to interpret useful life.

chanhvinh.com



## Cautions and warnings

### Personal safety

The electrolytes used have been optimized both with a view to the intended application and with regard to health and environmental compatibility.

As far as possible, we do not use any dangerous chemicals or compounds to produce operating electrolytes, although in exceptional cases, such materials must be used in order to achieve specific physical and electrical properties because no alternative materials are currently known.
We do, however, restrict the amount of dangerous materials used in our products to an absolute minimum.

Materials and chemicals used in our Aluminum Electrolytic Capacitors and Hybrid Polymer Capacitors are continuously adapted in compliance with the TDK Electronics Corporate Environmental Policy and the latest EU regulations and guidelines such as RoHS, REACH/SVHC, GADSL, and ELV.

MDS (Material Data Sheets) are available on our website for types listed on the product information site of TDK.
MDS for customer specific capacitors are available upon request.

Nevertheless, the following rules should be observed when handling Aluminum Electrolytic Capacitors and Hybrid Polymer Capacitors: No electrolyte should come into contact with eyes or skin. If electrolyte does come into contact with the skin, wash the affected areas immediately with running water. If the eyes are affected, rinse them for 10 minutes with plenty of water. If symptoms persist, seek medical treatment. Avoid inhaling electrolyte vapor or mists. Workplaces and other affected areas should be well ventilated. Clothing that has been contaminated by electrolyte must be changed and rinsed in water.

chanhvinh.com



**Product safety**

The table below summarizes the safety instructions that must be observed without fail. A detailed description can be found in the relevant sections of seperate file chapter “General technical information”.

| Topic | Safety information | Reference chapter “General technical information” |
|---|---|---|
| Polarity | Make sure that polar capacitors are connected with the right polarity. | 1 “Basic construction of aluminum electrolytic capacitors” |
| Reverse voltage | Voltages of opposite polarity should be prevented by connecting a diode. | 3.1.6 “Reverse voltage” |
| Operating temperature range | Do not exceed the temperature limits specified in the product data sheet.<br>Useful life and reliability depend to a large extent on the capacitor's temperature. | 7.1, 7.2 “Minimum and maximum permissible operating temperatures” |
| Storage | Do not store capacitors at high temperatures or high humidity. Capacitors should be stored at +5 to +35 °C and a relative humidity of ≤ 75%. | 7.3 “Shelf life and storage conditions” |
| Mounting of capacitors | The internal and external structure of capacitors might be damaged if excessive force is applied to their terminals.<br>Avoid any compressive, tensile or flexural stress.<br>Do not move the capacitor after soldering to PC board.<br>Do not pick up the PC board by the soldered capacitor.<br>Do not insert the capacitor on the PC board with a hole space different to the lead space specified. | 11 “Mounting” |
| Mounting position of capacitors | The position of the pressure relief device must be taken into consideration when designing the application layout. As a rule, the function of the pressure relief device must not be impaired or blocked by the mounting.<br>Screw terminal capacitors, with pressure relief device in the cover disk, must not be mounted with terminals facing down unless otherwise specified.<br>Multi-pin capacitors with pressure relief device on the can base must not be mounted with terminals facing up unless otherwise specified. | 11.1 “Mounting positions of capacitors” |

chanhvinh.com



| Topic | Safety information | Reference chapter “General technical information” |
|---|---|---|
| Robustness of terminals | Unless otherwise specified, the following maximum tightening torques must not be exceeded when connecting screw terminals:<br>M5: 2.5 Nm<br>M6: 4.0 Nm | 11.2<br>“Mounting torques” |
| Potting and gluing | If applied, potting and gluing materials must not impair the function of the capacitor’s pressure relief device. | 11.4<br>“Potting and gluing” |
| Soldering | Do not exceed the specified time or temperature limits during soldering. | 11.5<br>“Soldering” |
| Soldering, cleaning agents | Do not allow halogenated hydrocarbons to come into contact with Aluminum Electrolytic Capacitors or Hybrid Polymer Capacitors. | 11.6<br>“Cleaning agents” |
| Passive flammability | Avoid external energy, e.g. fire. | 8.1<br>“Passive flammability” |
| Active flammability | Avoid overload of the capacitors. | 8.2<br>“Active flammability” |
| Maintenance | Make periodic inspections of the capacitors.<br>Before the inspection, make sure that the power supply is turned off and carefully discharge the capacitors.<br>Do not apply excessive mechanical stress to the capacitor terminals when mounting. | 10<br>“Maintenance” |
| | | Reference chapter “Capacitors with screw terminals” |
| Breakdown strength of shrinking sleeve | Do not damage the shrinking sleeve, especially when ring clips are used for mounting. | “Screw terminals – accessories” |

**Display of ordering codes for TDK Electronics products**

The ordering code for one and the same product can be represented differently in data sheets, data books, other publications, on the company website, or in order-related documents such as shipping notes, order confirmations and product labels. The varying representations of the ordering codes are due to different processes employed and do not affect the specifications of the respective products.
Detailed information can be found on the Internet under www.tdk-electronics.tdk.com/orderingcodes.

chanhvinh.com



## Symbols and terms

| Symbol | English | German |
|---|---|---|
| C | Capacitance | Kapazität |
| ΔC | Capacitance difference | Kapazitätsdifferenz |
| $C_R$ | Rated capacitance | Nennkapazität |
| $C_S$ | Series capacitance | Serienkapazität |
| $C_{S,T}$ | Series capacitance at temperature T | Serienkapazität bei Temperatur T |
| $C_f$ | Capacitance at frequency f | Kapazität bei Frequenz f |
| d | Case diameter, nominal dimension | Gehäusedurchmesser, Nennmaß |
| $d_{max}$ | Maximum case diameter | Maximaler Gehäusedurchmesser |
| ESL | Self-inductance | Eigeninduktivität |
| ESR | Equivalent series resistance | Ersatzserienwiderstand |
| $ESR_f$ | Equivalent series resistance at frequency f | Ersatzserienwiderstand bei Frequenz f |
| $ESR_T$ | Equivalent series resistance at temperature T | Ersatzserienwiderstand bei Temperatur T |
| f | Frequency | Frequenz |
| I | Current | Strom |
| $I_{AC}$ | Alternating current (ripple current) | Wechselstrom |
| $I_{AC,RMS}$ | Root-mean-square value of alternating current | Wechselstrom, Effektivwert |
| $I_{AC,f}$ | Ripple current at frequency f | Wechselstrom bei Frequenz f |
| $I_{AC,max}$ | Maximum permissible ripple current | Maximal zulässiger Wechselstrom |
| $I_{AC,R}$ | Rated ripple current | Nennwechselstrom |
| $I_{leak}$ | Leakage current | Reststrom |
| $I_{leak,op}$ | Operating leakage current | Betriebsreststrom |
| l | Case length, nominal dimension | Gehäuselänge, Nennmaß |
| $l_{max}$ | Maximum case length (without terminals and mounting stud) | Maximale Gehäuselänge (ohne Anschlüsse und Gewindebolzen) |
| R | Resistance | Widerstand |
| $R_{ins}$ | Insulation resistance | Isolationswiderstand |
| $R_{symm}$ | Balancing resistance | Symmetrierwiderstand |
| T | Temperature | Temperatur |
| ΔT | Temperature difference | Temperaturdifferenz |
| $T_A$ | Ambient temperature | Umgebungstemperatur |
| $T_B$ | Capacitor base temperature | Temperatur des Gehäusebodens |
| $T_C$ | Case temperature | Gehäusetemperatur |
| t | Time | Zeit |
| Δt | Period | Zeitraum |
| $t_b$ | Service life (operating hours) | Brauchbarkeitsdauer (Betriebszeit) |
| V | Voltage | Spannung |
| $V_F$ | Forming voltage | Formierspannung |
| $V_{op}$ | Operating voltage | Betriebsspannung |
| $V_R$ | Rated voltage, DC voltage | Nennspannung, Gleichspannung |
| $V_S$ | Surge voltage | Spitzenspannung |

chanhvinh.com



| Symbol | English | German |
|---|---|---|
| $X_C$ | Capacitive reactance | Kapazitiver Blindwiderstand |
| $X_L$ | Inductive reactance | Induktiver Blindwiderstand |
| Z | Impedance | Scheinwiderstand |
| $Z_T$ | Impedance at temperature T | Scheinwiderstand bei Temperatur T |
| tan $\delta$ | Dissipation factor | Verlustfaktor |
| $\lambda$ | Failure rate | Ausfallrate |
| $\varepsilon_0$ | Absolute permittivity | Elektrische Feldkonstante |
| $\varepsilon_r$ | Relative permittivity | Dielektrizitätszahl |
| $\omega$ | Angular frequency; $2 \cdot \pi \cdot f$ | Kreisfrequenz; $2 \cdot \pi \cdot f$ |

**Note:**

All dimensions are given in mm.

chanhvinh.com

## Important notes

The following applies to all products named in this publication:

1. Some parts of this publication contain **statements about the suitability of our products for certain areas of application**. These statements are based on our knowledge of typical requirements that are often placed on our products in the areas of application concerned. We nevertheless expressly point out **that such statements cannot be regarded as binding statements about the suitability of our products for a particular customer application**. As a rule we are either unfamiliar with individual customer applications or less familiar with them than the customers themselves. For these reasons, it is always ultimately incumbent on the customer to check and decide whether a product with the properties described in the product specification is suitable for use in a particular customer application.

2. We also point out that **in individual cases, a malfunction of electronic components or failure before the end of their usual service life cannot be completely ruled out in the current state of the art, even if they are operated as specified**. In customer applications requiring a very high level of operational safety and especially in customer applications in which the malfunction or failure of an electronic component could endanger human life or health (e.g. in accident prevention or life-saving systems), it must therefore be ensured by means of suitable design of the customer application or other action taken by the customer (e.g. installation of protective circuitry or redundancy) that no injury or damage is sustained by third parties in the event of malfunction or failure of an electronic component.

3. **The warnings, cautions and product-specific notes must be observed**.

4. In order to satisfy certain technical requirements, **some of the products described in this publication may contain substances subject to restrictions in certain jurisdictions (e.g. because they are classed as hazardous)**. Useful information on this will be found in our Material Data Sheets on the Internet (www.tdk-electronics.tdk.com/material). Should you have any more detailed questions, please contact our sales offices.

5. We constantly strive to improve our products. Consequently, **the products described in this publication may change from time to time**. The same is true of the corresponding product specifications. Please check therefore to what extent product descriptions and specifications contained in this publication are still applicable before or when you place an order.
   We also **reserve the right to discontinue production and delivery of products**. Consequently, we cannot guarantee that all products named in this publication will always be available. The aforementioned does not apply in the case of individual agreements deviating from the foregoing for customer-specific products.

6. Unless otherwise agreed in individual contracts, **all orders are subject to our General Terms and Conditions of Supply**.

chanhvinh.com



## Important notes

7. **Our manufacturing sites serving the automotive business apply the IATF 16949 standard**. The IATF certifications confirm our compliance with requirements regarding the quality management system in the automotive industry. Referring to customer requirements and customer specific requirements ("CSR") TDK always has and will continue to have the policy of respecting individual agreements. Even if IATF 16949 may appear to support the acceptance of unilateral requirements, we hereby like to emphasize that **only requirements mutually agreed upon can and will be implemented in our Quality Management System**. For clarification purposes we like to point out that obligations from IATF 16949 shall only become legally binding if individually agreed upon.
8. The trade names EPCOS, CarXield, CeraCharge, CeraDiode, CeraLink, CeraPad, CeraPlas, CSMP, CTVS, DeltaCap, DigiSiMic, FilterCap, FormFit, InsuGate, LeaXield, MediPlas, MiniBlue, MiniCell, MKD, MKK, ModCap, MotorCap, PCC, PhaseCap, PhaseCube, PhaseMod, PhiCap, PiezoBrush, PlasmaBrush, PowerHap, PQSine, PQvar, SIFERRIT, SIFI, SIKOREL, SilverCap, SIMDAD, SiMic, SIMID, SineFormer, SIOV, SurfIND, ThermoFuse, WindCap, XieldCap are **trademarks registered or pending** in Europe and in other countries. Further information will be found on the Internet at www.tdk-electronics.tdk.com/trademarks.

Release 2024-02