chanhvinh.com

TDK·Lambda ZWS 150BP-240BP Series

www.uk.tdk-lambda.com/zwsbp

LED Industrial Test Comm Broadcast

Single Output 150-240W Power Supplies

Features	Benefits
• 200% Peak power capability	• Can drive high current start up devices
• 30% smaller than previous generation	• Simplifies equipment design
• Operating temp. -10 to +70°C	• Improved system power optimisation
• 10 Year E-cap lifetime	• Superior reliability



Specification

Model		ZWS150BP	ZWS240BP
ITEMS			
AC Input Voltage range (3)	-	85 - 265VAC (47-63Hz)	
DC Input Voltage range	-	120 - 370VDC	
Input Current (typical) (2)	A	1.9 / 0.95	2.8 / 1.5
Inrush Current (2)	A	15 / 30A - Cold Start	
Power Factor (Typical) (2) (4)	-	0.98 / 0.93	
Peak Power (5)	-	Conditions for Full Power : <5s Peak Power duration; duty = 35%	
Maximum Ripple and Noise (5)	mV	Tamb ≥0° to ≤70°C : 24V: 150mV; 36V: 360mV; 48V: 480mV Tamb ≥-10° to <0°C : 24V: 360mV; 36V: 540mV; 48V: 720mV	
Temperature Coefficient	-	<0.02% / °C	
Hold Up time (Typ) at 100VAC	ms	20ms	
Leakage Current (6)	-	0.2 / 0.4mA max.	
Remote Control	-	Option (see table next page)	
Operating Temperature (5)	- -	all models are convection : -10°C to +50°C=100% load; +60°C=75% load ; +70°C : 150W models=50% load ; 240W models=30% load	
Storage Temperature	°C	-30 to +75°C	
Humidity (non condensing)	-	Operating: 30 - 90%RH, Storage: 10 - 90%RH	
Withstand Voltage	-	I/P to Grnd 2kVAC (10mA), I/P to O/P: 3kVAC (10mA), O/P to Grnd: 500VAC (20mA) for 1mn	
Isolation Resistance	Ω	>100MΩ at 25°C & 70%RH, Output to Grnd: 500VDC	
Vibration (non operating)	-	10 - 55Hz (1 minute sweep), 19.6m/s² constant X, Y, Z 1 hour	
Shock	-	<196.1 m/s	
Safety agency Certifications	-	UL60950-1, CSA60950-1, EN60950-1, EN50178 (OV II), CE Mark	
Conducted & Radiated EMI	-	EN55011 / EN55022-B, FCC-B, VCCI-B	
Immunity	-	IEC61000-4-2 (lv 2, 3), -3 (lv 3), -4 (lv 3), -5 (lv 3, 4), -6 (lv 3), -8 (lv 4), -11	
Weight (Typ)	g	360	520
Size (W x H x D)	mm	75 x 37 x 160	84 x 42 x 180

Notes:

(1) Avoid prolonged operation in overload (2) 100 / 200VAC Input (3) 85-90Vac = output current = 80%

(4) Built to meet EN 61000-3-2 (5) Refer to detailed specifications & Application Notes

(6) 100/230VAC Input

chanhvinh.com

TDK·Lambda

Model Selector

Model	Output Voltage (V)	Output Adjust Range (V)	Average Output Current (A)	Peak Output Current (A)	Averge Output Power (W)	Peak Output Power (W)	Efficiency at 200VAC Input (%)	Load reg (mV)	Line reg (mV)	OCP (A)	OVP (V)
ZWS150BP-24	24	21.6 - 27.5	6.3	12	151.2	288	90	192	96	12.66	28.8 - 33.6
ZWS150BP-36	36	32.4 - 39.6	4.2	8	151.2	288	90	288	144	8.44	41.4 - 48.6
ZWS150BP-48	48	39.6 - 52.8	3.2	6	153.6	288	90	384	192	6.43	55.2 - 64.8
ZWS240BP-24	24	21.6 - 27.5	10	20	240	480	91	192	96	20.10	28.8 - 33.6
ZWS240BP-36	36	32.4 - 39.6	6.7	13.4	241.2	482.4	91	288	144	13.47	41.4 - 48.6
ZWS240BP-48	48	39.6 - 52.8	5	10	240	480	91	384	192	10.05	55.2 - 64.8

Option Description

	Suffix
L-Plate and Cover	/A
L-Plate	/L
Conformally coated PCB	/CO2
Remote on/off	/R
Terminal Block (240W models only)	/T

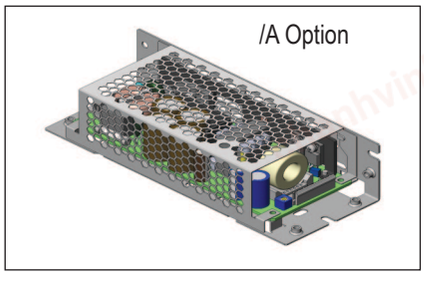

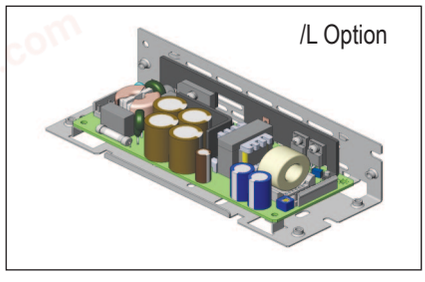

chanhvinh.com

TDK·Lambda

Outline Drawing ZWS150BP

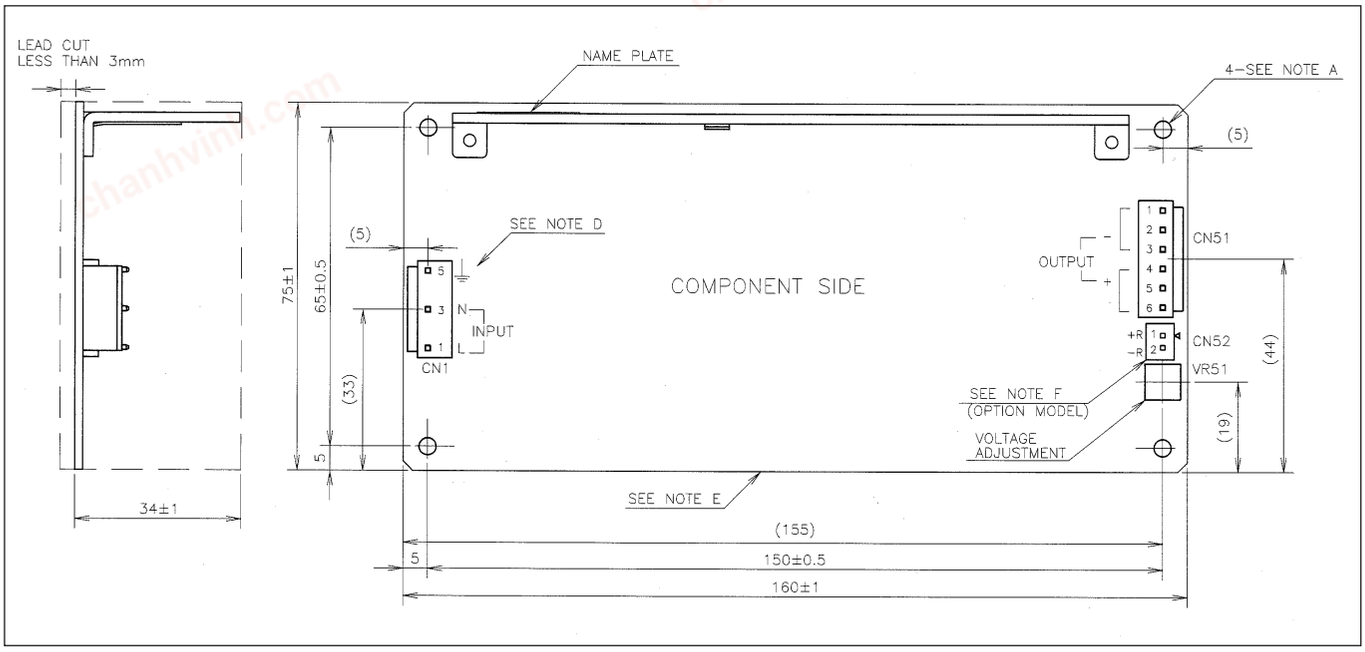

Outline Drawing ZWS240BP

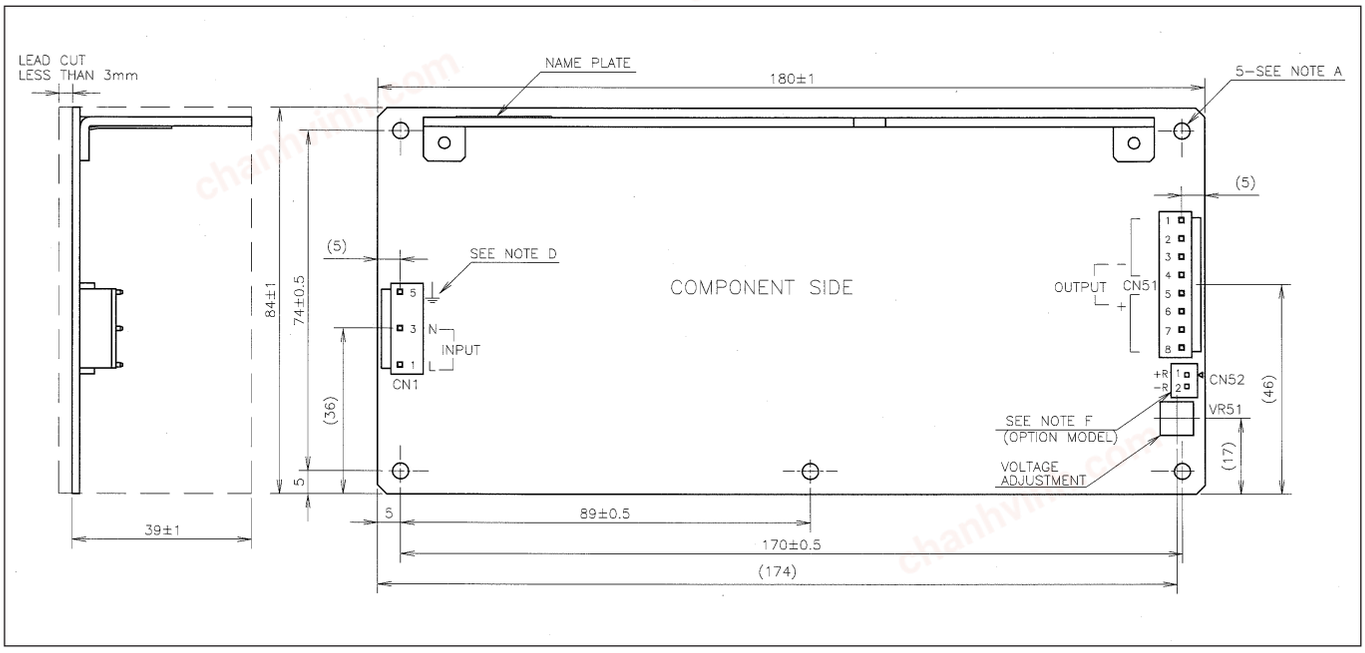

chanhvinh.com

TDK·Lambda

TDK-LAMBDA EMEA

www.emea.tdk-lambda.com



TDK-Lambda France SAS
ZAC des Delaches
CS 41077
9 rue Thuillere
91978 Villebon Courtaboeuf
France
Tel: +33 1 60 12 71 65
Fax: +33 1 60 12 71 66
france@fr.tdk-lambda.com
www.fr.tdk-lambda.com



Italy Sales Office
Via dei Lavoratori 128/130
20092 Cinisello Balsamo (MI)
Italy
Tel: +39 02 61 29 38 63
Fax: +39 02 61 29 09 00
info.italia@it.tdk-lambda.com
www.it.tdk-lambda.com



TDK-Lambda Germany GmbH
Karl-Bold-Strasse 40
77855 Achern
Germany
Tel: +49 7841 666 0
Fax: +49 7841 5000
info.germany@de.tdk-lambda.com
www.de.tdk-lambda.com



Austria Sales Office
Aredstrasse 22
2544 Leobersdorf
Austria
Tel: +43 2256 655 84
Fax: +43 2256 645 12
info.germany@de.tdk-lambda.com
www.de.tdk-lambda.com



TDK-Lambda UK Ltd.
Kingsley Avenue
Ilfracombe
Devon EX34 8ES
United Kingdom
Tel: +44 (0) 12 71 85 66 66
Fax: +44 (0) 12 71 86 48 94
powersolutions@uk.tdk-lambda.com
www.uk.tdk-lambda.com



TDK-Lambda Ltd.
Kibbutz
Givat Hashlosha 48800
Israel
Tel: +9 723 902 4333
Fax: +9 723 902 4777
info@tdk-lambda.co.il
www.tdk-lambda.co.il



Russia
Technical Support:
St Petersburg
Tel: +7 (812) 6580463
Sales:
Moscow
Tel: +7 (499) 7557732
info@tdk-lambda.ru
www.tdk-lambda.ru

Local Distribution

ZWS 150BP-240BP Aug12 v1