chanhvinh.com

TDK·Lambda ZWS10-50C Series

10 to 60W Single Output, High Reliability Power Supplies

https://product.tdk.com/en/power/zws-c
www.emea.lambda.tdk.com/zws-c

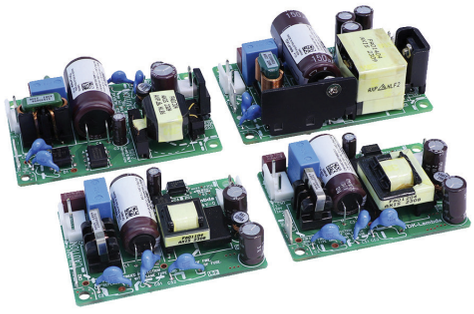

Industrial Test COMM Broadcast

The ZWS-C industrial grade power supplies are used in a wide range of applications where equipment down-time cannot be tolerated during years of operation. Globally, process control, machinery, semiconductor fabrication and test and measurement equipment manufacturers depend upon the ZWS series to provide a reliable source of power. Conservatively rated electrolytic capacitor temperatures offer improved field life-times of up to 15 years. Available in four power levels, 10W, 15W, 30W and 50W, the series provides a choice of 5V, 12V, 15V, 24V and 48V (50W only) outputs. These compact products meet class B conducted and radiated EMI in either a Class I or Class II (double insulated) construction, without the need for external filtering. In addition to a double sided board coating option, L bracket and cover configurations are available, or terminal pins for printed circuit board mounting.

Features	Benefits
• Up to 15 Year Electrolytic Capacitor Lifetimes	• Improved Field Life
• Curve B Radiated and Conducted EMI	• Easier System Compliance
• Enclosure, Board Coating and Connection Options	• Simplified Mounting and Installation
• Can be used in Class I and Class II installations	• Flexible Utilisation
• 5 year Warranty	• Low Cost of Ownership

Model Selector

Model	Output Voltage (V) (Fixed)	Maximum Current (A) (100 / 200Vac)	Maximum Output Power (W) (100 / 200Vac)	Load Regulation (mV)	Over Voltage Protection (V)	Efficiency (Typ) (%) (100 / 200Vac)
ZWS10C-5	5	2	10	40	>5.75	77 / 78
ZWS15C-5	5	3	15	40	>5.75	76 / 78
ZWS30C-5	5	4	20	120	>5.75	80 / 82
ZWS50C-5	5	6 / 7	30 / 35	120	>5.75	80 / 81
ZWS10C-12	12	0.9	10.8	96	>13.8	82 / 83
ZWS15C-12	12	1.3 / 1.7	15.6 / 20.4	96	>13.8	80 / 83
ZWS30C-12	12	2.5 / 2.92	30 / 35	120	>13.8	84 / 86
ZWS50C-12	12	4.3 / 5	51.6 / 60	288	>13.8	83 / 86
ZWS10C-15	15	0.7	10.5	120	>17.25	83 / 84
ZWS15C-15	15	1.0 / 1.35	15 / 20.3	120	>17.25	81 / 84
ZWS30C-15	15	2.0 / 2.33	30 / 35	120	>17.25	85 / 87
ZWS50C-15	15	3.5 / 4	52.5 / 60	150	>17.25	84 / 87
ZWS10C-24	24	0.5	12	151	>26.88	84 / 85
ZWS15C-24	24	0.7 / 0.85	16.8 / 20.4	151	>26.88	82 / 85
ZWS30C-24	24	1.25 / 1.46	30 / 35	192	>27.6	86 / 88
ZWS50C-24	24	2.1 / 2.5	50.4 / 60	192	>27.6	85 / 87
ZWS50C-48	48	1.1 / 1.25	52.8 / 60	384	>55.2	86 / 88

ZWS	50	C	-	5	/A

Nominal power: 10, 15, 30, 50

Output voltage: 5, 12, 15, 24, 48

Suffix	Description
Blank	Open frame
/A	L-bracket & cover
/L	L-bracket
/P	Open frame, Pcb mount
/CO2	Double sided Pcb coating

Contact factory for availability

chanhvinh.com

Specifications

Model		ZWS10C	ZWS15C	ZWS30C	ZWS50C
Input					
Input Voltage Range (Operating) (1)	Vac	85 - 265			
Nominal Input Voltage Range	Vac	100 - 240 (Note: Safety certified for 90-264Vac only)			
Input Frequency	Hz	47 - 63 (Note: Safety certified for 50-60Hz only)			
Input Current (100 / 200Vac)	A	0.25 / 0.13	5V: 0.34 / 0.17 12-24V: 0.34 / 0.24	5V: 0.60 / 0.35 12-24V: 0.70 / 0.50	5V: 1.1 / 0.7 12-48V: 1.2 / 1.0
Inrush Current 100 / 200Vac (typ) (Cold Start)	A	30 / 60			
Leakage Current (230Vac 60Hz)	mA	<0.30 (230Vac 60Hz)			
No Load Power Consumption	W	ZWS10C: 0.1 to 0.2, ZWS15C: 0.1, ZWS30C: 0.1 to 0.2, ZWS50C: 0.2 to 0.5W. See Evaluation data on website (2)			
Hold Up Time (typ) at 100Vac, 100% load	ms	20 at 100Vac, 80% Load			
Efficiency	-	See Model Selector Table			
Conducted & Radiated EMI	-	EN55011 / EN55032-B, FCC-B, VCCI-B			
Immunity	-	IEC61000-6-2, EN61000-4-2 , -3, -4, -5, -6, -8, -11 (See immunity table)			
Insulation Class	-	Certified for Class I or Class II installations			
Safety Certifications and Markings	-	IEC/UL/CSA/EN62368-1, EN60335-1, IEC/EN61558-1, IEC/EN61558-2-16, CE Mark and UKCA Mark			

Immunity

Test	Standard	Test Level	Criteria	Notes
ESD	EN61000-4-2	Air ± 8kV and contact ± 4kV	B	See IEC61000 immunity test report on website
Radiated Susceptibility	EN61000-4-3	80M -1GHz: 10V/m 1.4 - 2.0GHz: 3V/m 2.0 - 2.7GHz: 1V/m	A	
Electrical Fast Transient Burst	EN61000-4-4	± 2kV	B	
Surge	EN61000-4-5	Normal ± 2kV Common ± 4kV	B	
Conducted Susceptibility	EN61000-4-6	10Vrms	A	
Magnetic Fields	EN61000-4-8	30A/m	A	
Voltage Dips	EN61000-4-11	30% 500ms 60% 200ms 100% 20ms 100% 5000ms	A A/B A B	

chanhvinh.com

Specifications

Model		ZWS10C	ZWS15C	ZWS30C	ZWS50C
Output					
Output Voltage Adjustment	-	Fixed			
Switching Frequency	kHz	100			
Line Regulation	mV	5V: 20, 12V: 48, 15V: 60, 24V: 96, 48V 192			
Load Regulation	-	See Model Selector Table			
External Load Capacitance	uF	ZWS10C; 5V: 10,000, 12V: 2,000, 15V:1,400, 24V: 300 ZWS15C; 5V: 10,000, 12V: 2,500, 15V:1,000, 24V: 500 ZWS30C; 5V: 10,000, 12V: 2,700, 15V:1,500, 24V: 600 ZWS50C; 5V: 6,000, 12V: 5,000, 15V:4,000, 24V: 2,500, 48V: 560			
Ripple & Noise	mV	5V: 120, 12-24V: 150, 48V: 200			
Temperature Coefficient	%/°C	<0.02			
Minimum Load	-	No minimum load required			
Overcurrent Protection	%	>1.05			
Overvoltage Protection	V	See Model Selector Table. ZWS10C and ZWS15C Zener clamp. ZWS30C and ZWS50C cycle AC to reset			
Remote Sense	-	-			
Remote On/Off	-	-			
Parallel Operation	-	Not possible			
Environmental					
Operating Temperature (2) (Convection Cooling, Horizontal Mounting)	°C	-10 to +70, derate from 100% to 50% load from 50 to 70 (ZWS10-C from 55 to 70)			
Storage Temperature	°C	-30 to +75			
Humidity (non condensing)	%RH	30 - 90 operating, 10 - 95 storage			
Pollution Degree	-	PD2			
Cooling	-	Convection. (Forced air will reduce derating at high ambient temperatures, see specifications on website)(2			
Altitude	m	4,000 (2,000 for IEC/EN61558-1, IEC/EN61558-2-16)			
Withstand Voltage (For 1 minute)	Vac	Input to Ground 2,000, Input to Output 3,000, Output to Ground 750			
Isolation Resistance	MΩ	>100 at 25°C, 70%RH & 500Vdc			
Vibration (Non operating)	-	10-55Hz (Sweep for 1min.) 19.6m/s^2 Constant X,Y,Z 1 hour each			
Shock (Non operating)	-	Less than 196m/s^2			
Other					
Weight (Typ) (Open frame models)	g	40	47	65	105
Size (LxWxH) (Open frame models)	mm	63.5 x 45.7 x 22.1	63.5 x 45.7 x 22.1	76.2 x 50.8 x 24.2	76.2 x 50.8 x 26.7
Size (LxWxH) (Open frame models)	Inches	2.5 x 1.8 x 0.87	2.5 x 1.8 x 0.87	3 x 2 x 0.95	3 x 2 x 1.05
Connectors	-	Input: JST B2P3-VH, Output: ZWS10-30: B2P-VH, ZWS50: B4P-VH			
MTBF - JEITA RCR-9102B(3)	Hours	389,511	379,236	371,311	366,537
Warranty	Years	5			

Notes:
(1) ZWS50C-12, -15, -24, -48: Derate linearly to 90% load from 90 to 85Vac input
(2) See Instruction manual for further details
(3) Component count method, ground fixed. Note the JEITA RCR-9102B calculation method produces figures significantly lower than Telcordia

chanhvinh.com

Outline Drawing ZWS10C (Open Frame)

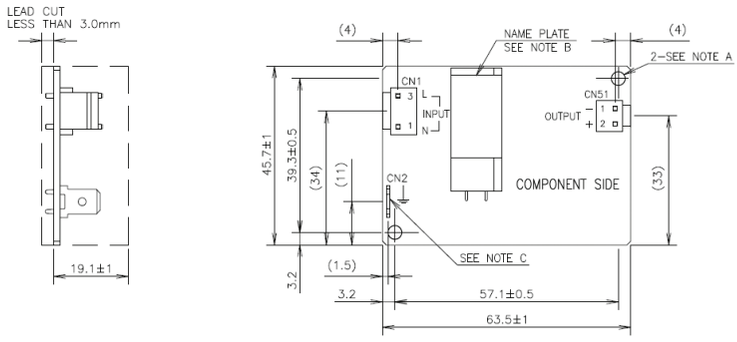

CONNECTORS USED:

PART DESCRIPTION	PART NAME	MANUFACT.	QTY
PIN HEADER (INPUT SIDE CN1)	B2P3-VH	J.S.T.	1
PIN HEADER (OUTPUT SIDE CN51)	B2P-VH	J.S.T.	1

MATCHING HOUSINGS (NOT INCLUDED WITH THE PRODUCT):

PART DESCRIPTION	PART NAME	MANUFACT.	QTY
SOCKET HOUSING (CN1)	VAR-2/VHR-3N	J.S.T.	1
SOCKET HOUSING (CN51)	VHR-2N	J.S.T.	1
HOUSING(CN2)	22~18AWG: STO-21T-250N	J.S.T.	1
	18~14AWG: STO-61T-250N		

MATCHING PINS & TOOL (NOT INCLUDED WITH THE PRODUCT):

PART DESCRIPTION	PART NAME	MANUFACT.	QTY
TERMINAL PINS	SVH-21T-P1.1	J.S.T.	4
	BVH-21T-P1.1		
HAND CRIMPING TOOL	YC-160R	J.S.T.	–

PART DESCRIPTION	PART NAME	MANUFACT.	QTY
TERMINAL PINS	SVH-41T-P1.1	J.S.T.	4
	BVH-41T-P1.1		
HAND CRIMPING TOOL	YC-930R	J.S.T.	–
	YC-931R		

NOTES

A: 2-ø3.5 HOLES ARE FOR CUSTOMER'S CHASSIS MOUNTING HOLES. ALL MUST BE SCREWED IN ORDER TO CONFORM THE VIBRATION SPEC.

B: MODEL NAME, INPUT VOLTAGE RANGE, NOMINAL OUTPUT VOLTAGE, MAXIMUM OUTPUT CURRENT, COUNTRY OF MANUFACTURE AND SAFETY MARKING (FOR ONLY APPROVED PRODUCTS) ARE SHOWN HERE IN ACCORDANCE WITH THE SPECIFICATIONS.

C: CN2 IS FOR SAFETY GROUND (FG) CONNECTION IN CLASS I.

D: TO KEEP THE DISTANCE MORE THAN 4mm BETWEEN PCB EDGE AND CUSTOMER'S CHASSIS.

Outline Drawing ZWS15C (Open Frame)

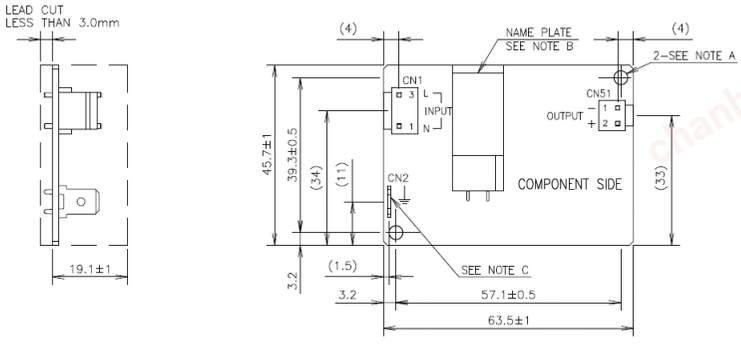

CONNECTORS USED:

PART DESCRIPTION	PART NAME	MANUFACT.	QTY
PIN HEADER (INPUT SIDE CN1)	B2P3-VH	J.S.T.	1
PIN HEADER (OUTPUT SIDE CN51)	B2P-VH	J.S.T.	1

MATCHING HOUSINGS (NOT INCLUDED WITH THE PRODUCT):

PART DESCRIPTION	PART NAME	MANUFACT.	QTY
SOCKET HOUSING (CN1)	VAR-2/VHR-3N	J.S.T.	1
SOCKET HOUSING (CN51)	VHR-2N	J.S.T.	1
HOUSING(CN2)	22~18AWG: STO-21T-250N	J.S.T.	1
	18~14AWG: STO-61T-250N		

MATCHING PINS & TOOL (NOT INCLUDED WITH THE PRODUCT):

PART DESCRIPTION	PART NAME	MANUFACT.	QTY
TERMINAL PINS	SVH-21T-P1.1	J.S.T.	4
	BVH-21T-P1.1		
HAND CRIMPING TOOL	YC-160R	J.S.T.	–

PART DESCRIPTION	PART NAME	MANUFACT.	QTY
TERMINAL PINS	SVH-41T-P1.1	J.S.T.	4
	BVH-41T-P1.1		
HAND CRIMPING TOOL	YC-930R	J.S.T.	–
	YC-931R		

NOTES

A: 2-ø3.5 HOLES ARE FOR CUSTOMER'S CHASSIS MOUNTING HOLES. ALL MUST BE SCREWED IN ORDER TO CONFORM THE VIBRATION SPEC.

B: MODEL NAME, INPUT VOLTAGE RANGE, NOMINAL OUTPUT VOLTAGE, MAXIMUM OUTPUT CURRENT, COUNTRY OF MANUFACTURE AND SAFETY MARKING (FOR ONLY APPROVED PRODUCTS) ARE SHOWN HERE IN ACCORDANCE WITH THE SPECIFICATIONS.

C: CN2 IS FOR SAFETY GROUND (FG) CONNECTION IN CLASS I.

D: TO KEEP THE DISTANCE MORE THAN 4mm BETWEEN PCB EDGE AND CUSTOMER'S CHASSIS.

chanhvinh.com

Outline Drawing ZWS30C (Open Frame)

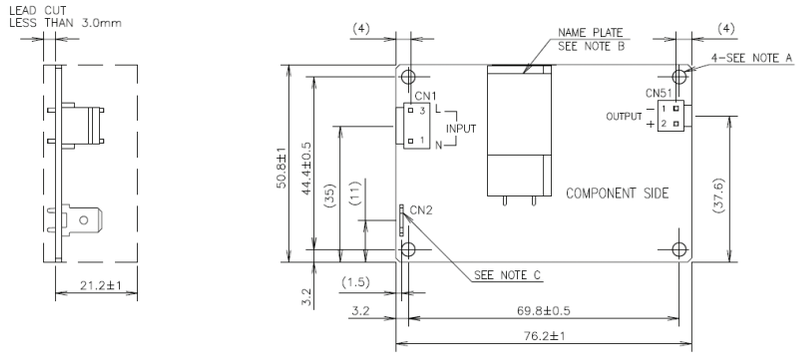

CONNECTORS USED:

PART DESCRIPTION	PART NAME	MANUFACT.	QTY
PIN HEADER (INPUT SIDE CN1)	B2P3-VH	J.S.T.	1
PIN HEADER (OUTPUT SIDE CN51)	B2P-VH	J.S.T.	1

MATCHING HOUSINGS (NOT INCLUDED WITH THE PRODUCT):

PART DESCRIPTION	PART NAME	MANUFACT.	QTY
SOCKET HOUSING (CN1)	VAR-2/VHR-3N	J.S.T.	1
SOCKET HOUSING (CN51)	VHR-2N	J.S.T.	1
HOUSING(CN2)	22~18AWG: STO-21T-250N	J.S.T.	1
	18~14AWG: STO-61T-250N		

MATCHING PINS & TOOL (NOT INCLUDED WITH THE PRODUCT):

PART DESCRIPTION	PART NAME	MANUFACT.	QTY
TERMINAL PINS	SVH-21T-P1.1	J.S.T.	4
	BVH-21T-P1.1		
HAND CRIMPING TOOL	YC-160R	J.S.T.	–

PART DESCRIPTION	PART NAME	MANUFACT.	QTY
TERMINAL PINS	SVH-41T-P1.1	J.S.T.	4
	BVH-41T-P1.1		
HAND CRIMPING TOOL	YC-930R	J.S.T.	–
	YC-931R		

NOTES

A: 4-ø3.5 HOLES ARE FOR CUSTOMER'S CHASSIS MOUNTING HOLES. ALL MUST BE SCREWED IN ORDER TO CONFORM THE VIBRATION SPEC.

B: MODEL NAME, INPUT VOLTAGE RANGE, NOMINAL OUTPUT VOLTAGE, MAXIMUM OUTPUT CURRENT, COUNTRY OF MANUFACTURE AND SAFETY MARKING (FOR ONLY APPROVED PRODUCTS) ARE SHOWN HERE IN ACCORDANCE WITH THE SPECIFICATIONS.

C: CN2 IS FOR SAFETY GROUND (FG) CONNECTION IN CLASS I.

D: TO KEEP THE DISTANCE MORE THAN 4mm BETWEEN PCB EDGE AND CUSTOMER'S CHASSIS.

Outline Drawing ZWS50C (Open Frame)

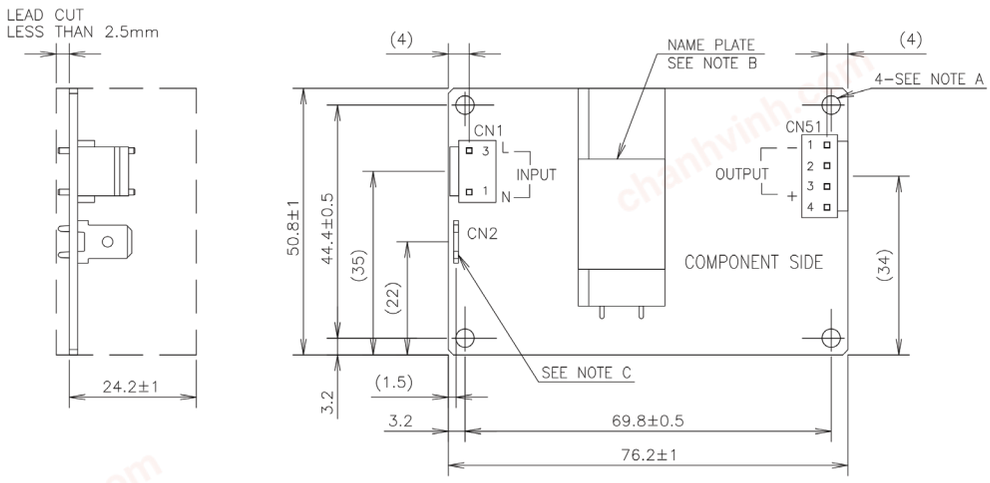

NOTES

A: 4-ø3.5 HOLES ARE FOR CUSTOMER'S CHASSIS MOUNTING HOLES. ALL MUST BE SCREWED IN ORDER TO CONFORM THE VIBRATION SPEC.

B: MODEL NAME, INPUT VOLTAGE RANGE, NOMINAL OUTPUT VOLTAGE, MAXIMUM OUTPUT CURRENT, COUNTRY OF MANUFACTURE AND SAFETY MARKING (FOR ONLY APPROVED PRODUCTS) ARE SHOWN HERE IN ACCORDANCE WITH THE SPECIFICATIONS.

C: CN2 IS FOR SAFETY GROUND (FG) CONNECTION IN CLASS I.

D: TO KEEP THE DISTANCE MORE THAN 4mm BETWEEN PCB EDGE AND CUSTOMER'S CHASSIS.

chanhvinh.com



TDK-Lambda France SAS
Tel: +33 1 60 12 71 65
tlf.fr-powersolutions@tdk.com
www.emea.lambda.tdk.com/fr



Italy Sales Office
Tel: +39 02 61 29 38 63
tlf.it-powersolutions@tdk.com
www.emea.lambda.tdk.com/it



Netherlands
tlf.nl-powersolutions@tdk.com
www.emea.lambda.tdk.com/nl



TDK-Lambda Germany GmbH
Tel: +49 7841 666 0
tlg.powersolutions@tdk.com
www.emea.lambda.tdk.com/de



Austria Sales Office
Tel: +43 2256 655 84
tlg.at-powersolutions@tdk.com
www.emea.lambda.tdk.com/at



Switzerland Sales Office
Tel: +41 44 850 53 53
tlg.ch-powersolutions@tdk.com
www.emea.lambda.tdk.com/ch



Nordic Sales Office
Tel: +45 8853 8086
tlg.dk-powersolutions@tdk.com
www.emea.lambda.tdk.com/dk



TDK-Lambda UK Ltd.
Tel: +44 (0) 12 71 85 66 66
tlu.powersolutions@tdk.com
www.emea.lambda.tdk.com/uk



TDK-Lambda Ltd.
Tel: +9 723 902 4333
tli.powersolutions@tdk.com
www.emea.lambda.tdk.com/il-en



TDK-Lambda Americas
Tel: +1 800-LAMBDA-4 or 1-800-526-2324
tla.powersolutions@tdk.com
www.us.lambda.tdk.com



TDK Electronics do Brasil Ltda
Tel: +55 11 3289-9599
sales.br@tdk-electronics.tdk.com
www.tdk-electronics.tdk.com/en



TDK-Lambda Corporation
Tel: +81-3-6778-1113
www.jp.lambda.tdk.com



TDK-Lambda (China) Electronics Co. Ltd.
Tel: +86 21 6485-0777
tlc.powersolutions@tdk.com
www.lambda.tdk.com.cn



TDK-Lambda Singapore Pte Ltd.
Tel: +65 6251 7211
tls.marketing@tdk.com
www.sg.lambda.tdk.com



TDK India Private Limited, Power Supply Division
Tel: +91 80 4039-0660
mathew.philip@tdk.com
www.sg.lambda.tdk.com

chanhvinh.com

For Additional Information, please visit
https://product.tdk.com/en/power/

