chanhvinh.com

TDK·Lambda

ZWS-BAF Series

33 to 302W Single Output, High Reliability Power Supplies

https://product.tdk.com/en/power/zws-baf
www.emea.lambda.tdk.com/zws-baf

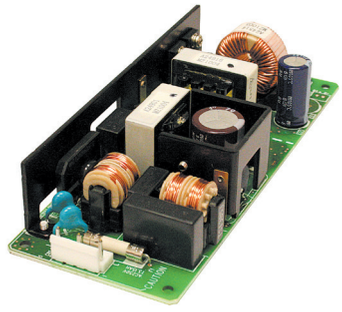

LED | Industrial | Test | COMM | Broadcast

The ZWS-BAF industrial grade power supplies are used in a wide range of applications where equipment down-time cannot be tolerated during years of operation. Globally, process control, test and measurement equipment, machinery, semiconductor fabrication, communications and large LED display manufacturers depend upon the ZWS-BAF to provide a reliable source of power. Conservatively rated electrolytic capacitor temperatures offer improved field life-times of up to 10 years. Available in five power levels, 50W, 75W, 100W, 150W and 300W, the series provides a choice of 3.3 to 48V outputs. A variety of mechanical configurations are available, in addition to a double sided board coating option.

Features	Benefits
• 10 Year Electrolytic Capacitor Lifetimes	• Improved Field Life
• Convection Cooled	• Reduced Dirt and Dust Contamination
• Curve B Radiated and Conducted EMI	• Easier System Compliance
• 5 year Warranty	• Low Cost of Ownership

Model Selector

Model	Output Voltage (V)	Adjustment Range (V)	Maximum Current (A)	Maximum Output Power (W)	Maximum Ripple & Noise (mV)	Over Current Protection (A)	Over Voltage Protection (V)	Efficiency (Typ) (%) (100/200Vac)
ZWS50BAF-3	3.3	2.97-3.63	10	33	160	>10.5	3.79-4.95	76 / 78
ZWS75BAF-3	3.3	2.97-3.63	15	49.5	160	>15.7	3.79-4.95	76 / 78
ZWS100BAF-3	3.3	2.97-3.63	20	66	160	>21.0	3.79-4.95	82 / 84
ZWS150BAF-3	3.3	2.97-3.63	30	99	160	>31.5	3.79-4.95	82 / 84
ZWS50BAF-5	5	4.5-5.5	10	50	160	>10.5	5.75-7.0	82 / 84
ZWS75BAF-5	5	4.5-5.5	15	75	160	>15.7	5.75-7.0	82 / 84
ZWS100BAF-5	5	4.5-5.5	20	100	160	>21.0	5.75-7.0	84 / 86
ZWS150BAF-5	5	4.5-5.5	30	150	160	>31.5	5.75-7.0	85 / 87
ZWS50BAF-12	12	10.8-13.2	4.3	51.6	180	>4.51	13.8-16.2	83 / 85
ZWS75BAF-12	12	10.8-13.2	6.3	75.6	180	>6.61	13.8-16.2	83 / 85
ZWS100BAF-12	12	10.8-13.2	8.5	102	180	>8.93	13.8-16.2	86 / 88
ZWS150BAF-12	12	10.8-13.2	12.5	150	180	>13.13	13.8-16.2	85 / 88
ZWS300BAF-12	12	10.8-13.2	25	300	180	>26.25	13.8-16.2	86 / 89
ZWS50BAF-15	15	13.5-16.5	3.5	52.5	180	>3.67	17.3-20.3	83 / 86
ZWS75BAF-15	15	13.5-16.5	5	75	180	>5.25	17.3-20.3	84 / 86
ZWS100BAF-15	15	13.5-16.5	6.7	100.5	180	>7.04	17.3-20.3	86 / 88
ZWS150BAF-15	15	13.5-16.5	10	150	180	>10.5	17.3-20.3	86 / 89
ZWS300BAF-15	15	13.5-16.5	20	300	180	>23.1	17.3-20.3	86 / 89
ZWS50BAF-24	24	21.6-26.4	2.1	50.4	180	>2.2	27.6-32.4	84 / 87
ZWS75BAF-24	24	21.6-26.4	3.2	76.8	180	>3.36	27.6-32.4	84 / 87
ZWS100BAF-24	24	21.6-26.4	4.3	103.2	180	>4.52	27.6-32.4	87 / 89
ZWS150BAF-24	24	21.6-26.4	6.3	151.2	180	>6.62	27.6-32.4	88 / 90
ZWS300BAF-24	24	21.6-26.4	12.5	300	180	>14.7	28.8-33.6	88 / 91
ZWS300BAF-36	36	32.4-39.6	8.4	302.4	300	>9.87	55.2-64.86	88 / 91
ZWS50BAF-48	48	39.5-52.8	1.1	52.8	240	>1.15	55.2-64.86	84 / 86
ZWS75BAF-48	48	39.5-52.8	1.6	76.8	240	>1.68	55.2-64.86	85 / 86
ZWS100BAF-48	48	39.5-52.8	2.1	100.8	240	>2.21	55.2-64.86	88 / 90
ZWS150BAF-48	48	39.5-52.8	3.2	153.6	240	>3.36	55.2-64.86	89 / 91
ZWS300BAF-48	48	39.5-52.8	6.3	302.4	300	>7.35	55.2-64.86	88 / 91

chanhvinh.com

ZWS	50	-BAF	-	3	/	

Nominal power: 50, 75, 100, 150, 300

Output voltage: 3 (3.3V), 5, 12, 15, 24, 36, 48

Blank	Open frame	ZWS50 - 300
/A	L-bracket & cover	ZWS50 - 300
/L	L-bracket	ZWS50 - 300
/CO2	Double sided PCB coating	ZWS50 - 300
/R	Remote on/off	ZWS100 - 300
/T	Screw terminal connections	ZWS300
/TA	Screw terminals, L bracket & cover	ZWS300

Specifications

Model		ZWS50BAF	ZWS75BAF	ZWS100BAF	ZWS150BAF	ZWS300BAF
Input						
Input Voltage Range (Operating)(1)	Vac	85 - 265				
Nominal Input Voltage Range	Vac	100 - 240 (Note: Safety certified for 90-264Vac only)				
Input Frequency	Hz	47 - 63 (Note: Safety certified for 50/60Hz only)				
DC Input Voltage Range	Vdc	120 - 370 (Note: Safety certified for AC input only)				
Input Current (100/200Vac)	A	3.3V: 0.45/0.25 5-48V: 0.65/0.35	3.3V: 0.7/0.35 5-48V: 0.95/0.5	3.3V: 0.9/0.45 5-48V: 1.3/0.65	3.3V: 1.3/0.65 5-48V: 1.9/0.95	12-15V: 3.7/1.9 24-48V: 3.6/1.8
Inrush Current at 230Vac (typ) (Cold Start)	A	28	28	28	28	30
Leakage Current	mA	<0.5				
Power Factor (100/200Vac)	-	3.3V: 0.96/0.85 5-48V: 0.97/0.91		3.3V: 0.96/0.89 5-48V: 0.98/0.93		0.97/0.93
Harmonic Compliance	-	Meets IEC61000-3-2				
Hold Up Time (typ) at 100Vac, 100% load	ms	20				18 (80% load)
Efficiency	-	See Model Selector Table				
Conducted & Radiated EMI	-	EN55011 / EN55032-B, FCC-B, VCCI-B				
Immunity	-	IEC61000-6-2, EN61000-4-2 , -3, -4, -5, -6, -8, -11				
Insulation Class	-	Class I				
Safety Certifications and Markings	-	IEC/UL/CSA/EN62368-1, 60950-1, EN50178 (OVC II), CE Mark and UKCA Mark				

Immunity

Test	Standard	Test Level	Criteria	Notes
ESD	EN61000-4-2	Air ± 8kV and contact ± 4kV	A	See IEC61000 immunity test report on website
Radiated Susceptibility	EN61000-4-3	80M -1GHz: 10V/m 1.4 - 2.0GHz: 3V/m 2.0 - 2.7GHz: 1V/m	A	
Electrical Fast Transient Burst	EN61000-4-4	± 2kV	A	
Surge	EN61000-4-5	Normal ± 2kV Common ± 4kV	A	
Conducted Susceptibility	EN61000-4-6	10Vrms	A	
Magnetic Fields	EN61000-4-8	30A/m	A	
Voltage Dips	EN61000-4-11	30% 500ms 60% 200ms 100% 20ms 100% 5000ms	B B B B	
SEMI F47 Line Dip	SEMI F47	-	-	At input voltages > 200Vac

chanhvinh.com

Specifications

Model		ZWS50BAF	ZWS75BAF	ZWS100BAF	ZWS150BAF	ZWS300BAF
Output						
Output Voltage Adjustment		See Model Selector Table				
Switching Frequency (Main converter)	kHz	100	100	120	120	120
Line Regulation	mV	3.3-5V: 20, 12V: 48, 15V: 60, 24V: 96, 36V: 144, 48V: 192				
Load Regulation	mV	3.3-5V: 40, 12V: 96, 15V: 120, 24V: 150, 36-48V: 240				
External Load Capacitance	uF	3.3-5V: 10,000, 12-15V: 5,000, 24V: 2,000, 48V: 500		3.3-5V: 15,000, 12-48V: No specification		No specification
Ripple & Noise	mV	See Model Selector Table				
Temperature Coefficient	%/°C	0.02				
Minimum Load	-	No minimum load required				
Overcurrent Protection	-	See Model Selector Table				
Overvoltage Protection	V	See Model Selector Table				
Remote Sense	-	-				
Remote On/Off	-	Optional on ZWS100BAF, ZWS150BAF and ZWS300BAF. See part numbering scheme				
Parallel Operation	-	Not possible				
Environmental						
Operating Temperature (2) (Convection Cooling)	°C	ZWS50-150BAF: -10 to +70, derate linearly from 100% to 50% load from 50 to 70 ZWS300BAF-12 to -15: -10 to +70, derate linearly from 100% to 40% load from 40 to 70 ZWS300BAF-24 to -48: -10 to +70, derate linearly from 100% to 40% load from 45 to 70				
Operating Temperature (2) (Forced Air Cooling)	°C	ZWS50-150BAF: -10 to +70, derate linearly from 100% to 70% load from 60 to 70 ZWS300BAF-12 to -15: -10 to +70, derate linearly from 100% to 60% load from 50 to 70 ZWS300BAF-24 to -48: -10 to +70, derate linearly from 100% to 70% load from 60 to 70				
Storage Temperature	°C	-30 to +75				
Humidity (non condensing)	%RH	30 - 90 Operating, 10 - 90 storage				
Cooling	-	Convection. (Forced air will reduce derating at high ambient temperatures)				
Altitude	m	3,000				
Withstand Voltage (For 1 minute)	Vac	Input to Ground 2,000, Input to Output 3,000, Output to Ground 500 for 1 minute				
Isolation Resistance	MΩ	>100 at 25°C, 70%RH & 500VDC				
Vibration (Non operating)	-	10-55Hz (Sweep for 1min.) 19.6m/s^2 Constant X,Y,Z 1 hour each				
Shock (Non operating)	-	Less than 196m/s^2				
Other						
Weight (Typ) (Open frame models)	g	165	230	290	390	540
Size (LxWxH) (Open frame models)	mm	132 x 50 x 26	150 x 50 x 33	155 x 62 x 33	160 x 75 x 37	180 x 84 x 42
Size (LxWxH) (Open frame models)	Inches	5.2 x 1.97 x 1.02	5.91 x 1.97 x 1.3	6.1 x 2.44 x 1.3	6.3 x 2.95 x 1.46	7.09 x 3.31 x 1.65
Connectors	-	JST or optional screw terminals for ZWS300BAF, see part numbering scheme				
MTBF - JEITA RCR-9102B (3)	Hours	227,860	216,524	227,177	209,078	235,840
Warranty	Years	5				

Notes:

See website for detailed specifications, test methods and installation manual

(1) ZWS300BAF: derate linearly to 80% load from 90 to 85Vac input

(2) See Instruction manual for further details and mounting orientations

(3) Component count method, ground fixed. Note the JEITA RCR-9102B calculation method produces figures significantly lower than Telcordia

chanhvinh.com

Outline Drawing ZWS50BAF (Open Frame)

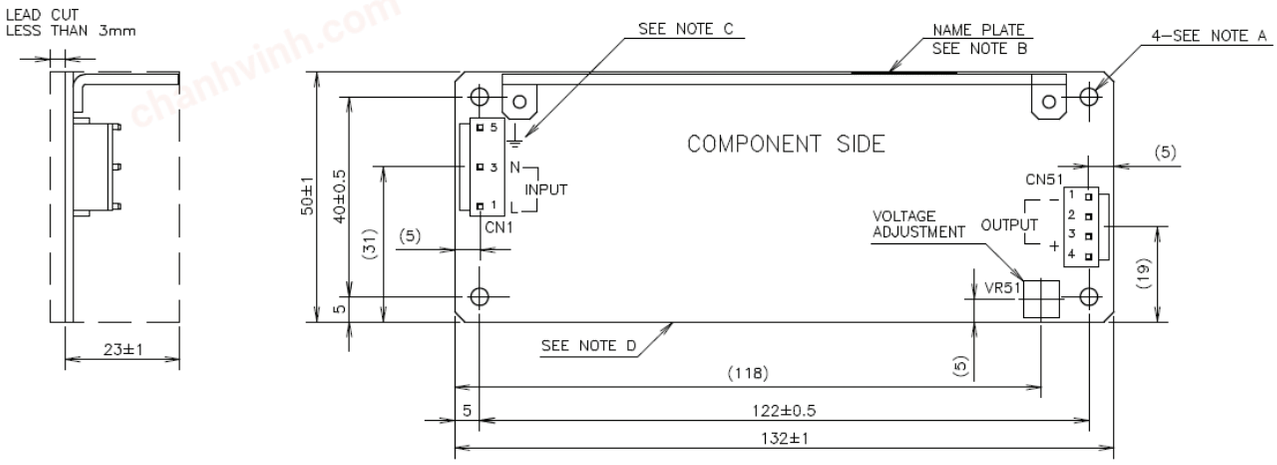

CONNECTORS USED:

PART DESCRIPTION	PART NAME	MANUFACT.	QTY
PIN HEADER (INPUT SIDE CN1)	B3P5–VH	J.S.T.	1
PIN HEADER (OUTPUT SIDE CN51)	B4P–VH	J.S.T.	1

*OUTPUT CURRENT OF EACH CONNECTOR PIN MUST BE LESS THAN 5A.

MATCHING HOUSINGS, PINS & TOOL (NOT INCLUDED WITH THE PRODUCT):

PART DESCRIPTION	PART NAME	MANUFACT.	QTY
SOCKET HOUSING (CN1)	VHR–5N	J.S.T.	1
SOCKET HOUSING (CN51)	VHR–4N	J.S.T.	1
TERMINAL PINS	SVH–21T–P1.1	J.S.T.	7
	BVH–21T–P1.1		
HAND CRIMPING TOOL	YC–160R	J.S.T.	–

NOTES

A: 4–ø3.5 HOLES ARE FOR CUSTOMER'S CHASSIS MOUNTING HOLES. ALL MUST BE SCREWED IN ORDER TO CONFORM THE VIBRATION SPEC.

B: MODEL NAME, INPUT VOLTAGE RANGE, NOMINAL OUTPUT VOLTAGE, AND MAXIMUM OUTPUT CURRENT, COUNTRY OF MANUFACTURE AND SAFETY MARKING (FOR ONLY APPROVED PRODUCTS) ARE SHOWN HERE IN ACCORDANCE WITH THE SPECIFICATIONS.

C: ⏚ IS PROTECTIVE BONDING TERMINAL.

D: TO KEEP THE DISTANCE MORE THAN 4mm BETWEEN PCB EDGE AND CUSTOMER'S CHASSIS.

Outline Drawing ZWS50BAF /A

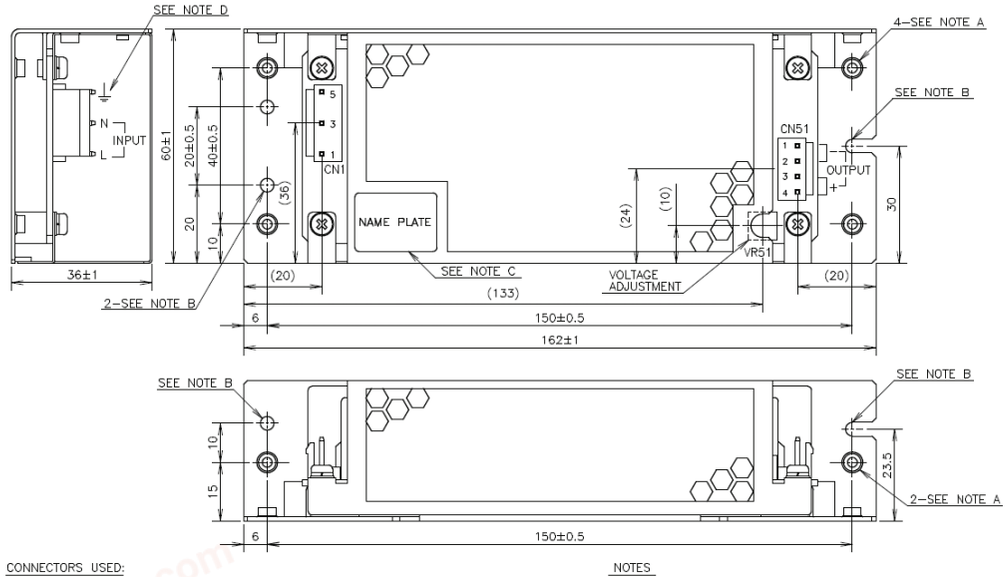

CONNECTORS USED:

PART DESCRIPTION	PART NAME	MANUFACT.	QTY
PIN HEADER (INPUT SIDE CN1)	B3P5–VH	J.S.T.	1
PIN HEADER (OUTPUT SIDE CN51)	B4P–VH	J.S.T.	1

*OUTPUT CURRENT OF EACH CONNECTOR PIN MUST BE LESS THAN 5A.

MATCHING HOUSINGS, PINS & TOOL (NOT INCLUDED WITH THE PRODUCT):

PART DESCRIPTION	PART NAME	MANUFACT.	QTY
SOCKET HOUSING (CN1)	VHR–5N	J.S.T.	1
SOCKET HOUSING (CN51)	VHR–4N	J.S.T.	1
TERMINAL PINS	SVH–21T–P1.1	J.S.T.	7
	BVH–21T–P1.1		
HAND CRIMPING TOOL	YC–160R	J.S.T.	–

NOTES

A: M3 EMBOSSED TAPPED & COUNTERSINK HOLES (6) ARE FOR CUSTOMER'S CHASSIS MOUNTING. ALL MUST BE SCREWED IN ORDER TO CONFORM THE VIBRATION/EMI SPEC.

B: ø3.5 HOLES (3) AND R1.75 SLOT HOLES (2) ARE FOR CUSTOMER'S CHASSIS MOUNTING HOLES.

C: MODEL NAME, INPUT VOLTAGE RANGE, NOMINAL OUTPUT VOLTAGE, MAXIMUM OUTPUT CURRENT, COUNTRY OF MANUFACTURE AND SAFETY MARKING (FOR ONLY APPROVED PRODUCTS) ARE SHOWN HERE IN ACCORDANCE WITH THE SPECIFICATIONS.

D: ⏚ IS PROTECTIVE BONDING TERMINAL.

chanhvinh.com

Outline Drawing ZWS50BAF/L

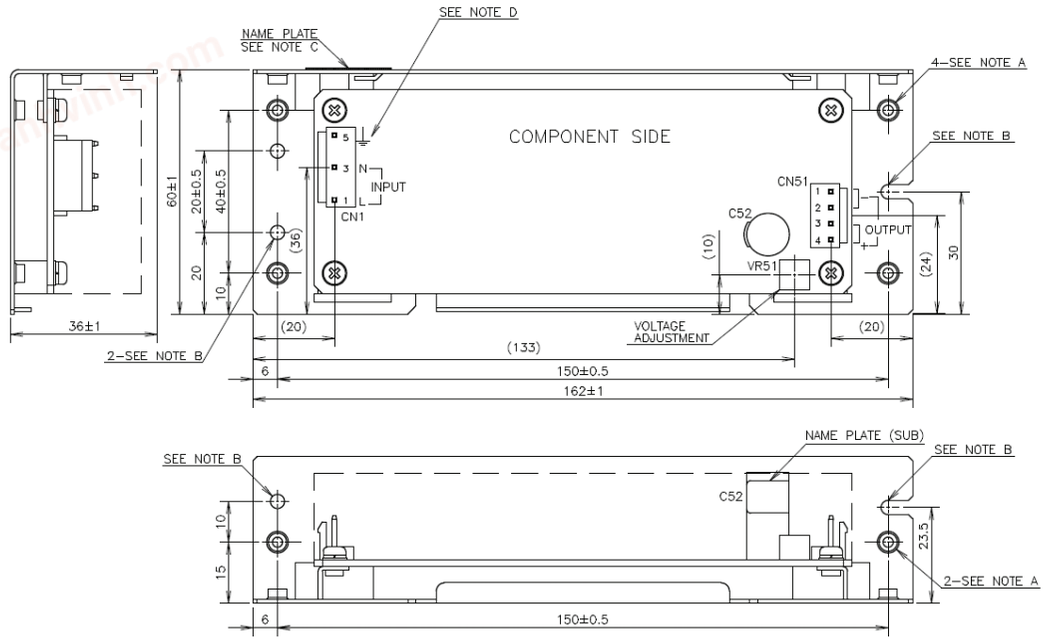

CONNECTORS USED:

PART DESCRIPTION	PART NAME	MANUFACT.	QTY
PIN HEADER (INPUT SIDE CN1)	B3P5–VH	J.S.T.	1
PIN HEADER (OUTPUT SIDE CN51)	B4P–VH	J.S.T.	1

*OUTPUT CURRENT OF EACH CONNECTOR PIN MUST BE LESS THAN 5A.

MATCHING HOUSINGS, PINS & TOOL (NOT INCLUDED WITH THE PRODUCT):

PART DESCRIPTION	PART NAME	MANUFACT.	QTY
SOCKET HOUSING (CN1)	VHR–5N	J.S.T.	1
SOCKET HOUSING (CN51)	VHR–4N	J.S.T.	1
TERMINAL PINS	SVH–21T–P1.1	J.S.T.	7
	BVH–21T–P1.1		
HAND CRIMPING TOOL	YC–160R	J.S.T.	–

NOTES

A: M3 EMBOSSED TAPPED & COUNTERSINK HOLES (6) ARE FOR CUSTOMER'S CHASSIS MOUNTING. ALL MUST BE SCREWED IN ORDER TO CONFORM THE VIBRATION/EMI SPEC.

B: ø3.5 HOLES (3) AND R1.75 SLOT HOLES (2) ARE FOR CUSTOMER'S CHASSIS MOUNTING HOLES.

C: MODEL NAME, INPUT VOLTAGE RANGE, NOMINAL OUTPUT VOLTAGE, MAXIMUM OUTPUT CURRENT, COUNTRY OF MANUFACTURE AND SAFETY MARKING (FOR ONLY APPROVED PRODUCTS) ARE SHOWN HERE IN ACCORDANCE WITH THE SPECIFICATIONS.

D: ⏚ IS PROTECTIVE BONDING TERMINAL.

Outline Drawing ZWS75BAF (Open Frame)

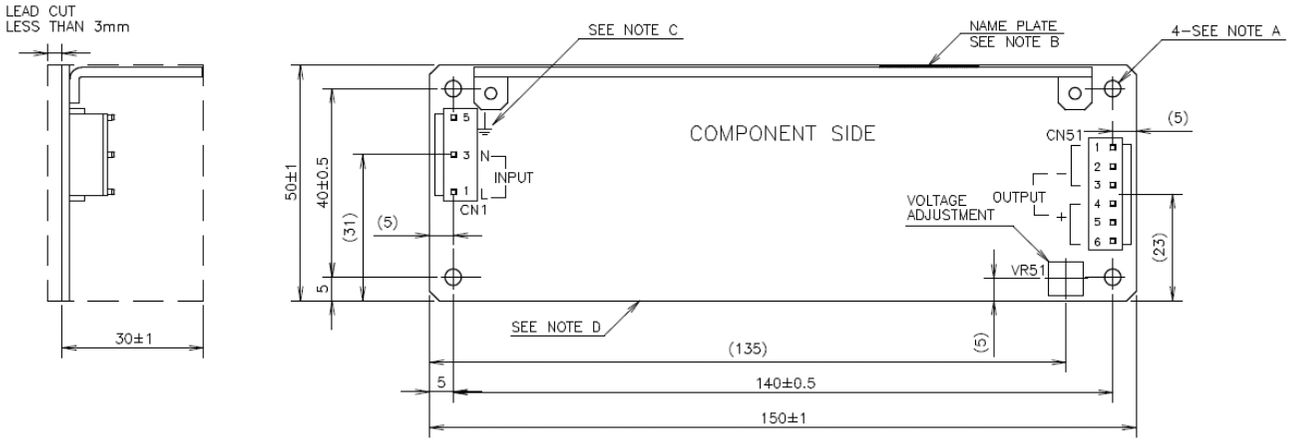

CONNECTORS USED:

PART DESCRIPTION	PART NAME	MANUFACT.	QTY
PIN HEADER (INPUT SIDE CN1)	B3P5–VH	J.S.T.	1
PIN HEADER (OUTPUT SIDE CN51)	B6P–VH	J.S.T.	1

*OUTPUT CURRENT OF EACH CONNECTOR PIN MUST BE LESS THAN 5A.

MATCHING HOUSINGS, PINS & TOOL (NOT INCLUDED WITH THE PRODUCT):

PART DESCRIPTION	PART NAME	MANUFACT.	QTY
SOCKET HOUSING (CN1)	VHR–5N	J.S.T.	1
SOCKET HOUSING (CN51)	VHR–6N	J.S.T.	1
TERMINAL PINS	SVH–21T–P1.1	J.S.T.	9
	BVH–21T–P1.1		
HAND CRIMPING TOOL	YC–160R	J.S.T.	–

NOTES

A: 4–ø3.5 HOLES ARE FOR CUSTOMER'S CHASSIS MOUNTING HOLES. ALL MUST BE SCREWED IN ORDER TO CONFORM THE VIBRATION SPEC.

B: MODEL NAME, INPUT VOLTAGE RANGE, NOMINAL OUTPUT VOLTAGE, MAXIMUM OUTPUT CURRENT, COUNTRY OF MANUFACTURE AND SAFETY MARKING (FOR ONLY APPROVED PRODUCTS) ARE SHOWN HERE IN ACCORDANCE WITH THE SPECIFICATIONS.

C: ⏚ IS PROTECTIVE BONDING TERMINAL.

D: TO KEEP THE DISTANCE MORE THAN 4mm BETWEEN PCB EDGE AND CUSTOMER'S CHASSIS.

chanhvinh.com

Outline Drawing ZWS100BAF (Open Frame)

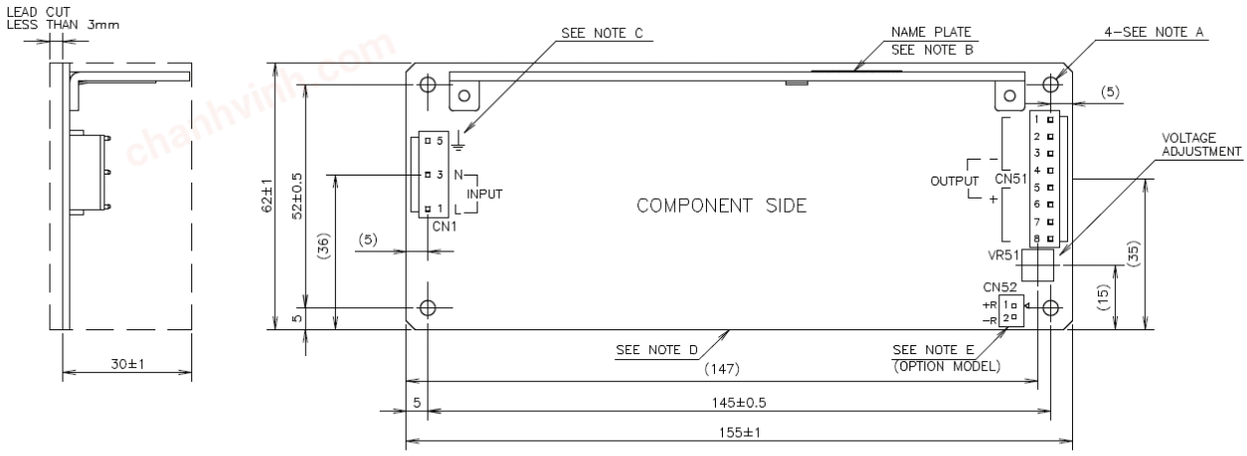

CONNECTORS USED:

PART DESCRIPTION	PART NAME	MANUFACT.	QTY
PIN HEADER (INPUT SIDE CN1)	B3P5-VH	J.S.T.	1
PIN HEADER (OUTPUT SIDE CN51)	B8P-VH	J.S.T.	1

*OUTPUT CURRENT OF EACH CONNECTOR PIN MUST BE LESS THAN 5A.

MATCHING HOUSINGS, PINS & TOOL (NOT INCLUDED WITH THE PRODUCT):

PART DESCRIPTION	PART NAME	MANUFACT.	QTY
SOCKET HOUSING (CN1)	VHR-5N	J.S.T.	1
SOCKET HOUSING (CN51)	VHR-8N	J.S.T.	1
TERMINAL PINS	SVH-21T-P1.1	J.S.T.	11
	BVH-21T-P1.1		
HAND CRIMPING TOOL	YC-160R	J.S.T.	-

NOTES

A: 4-ø3.5 HOLES ARE FOR CUSTOMER'S CHASSIS MOUNTING HOLES. ALL MUST BE SCREWED IN ORDER TO CONFORM THE VIBRATION SPEC.

B: MODEL NAME, INPUT VOLTAGE RANGE, NOMINAL OUTPUT VOLTAGE, AND MAXIMUM OUTPUT CURRENT, COUNTRY OF MANUFACTURE AND SAFETY MARKING (FOR ONLY APPROVED PRODUCTS) ARE SHOWN HERE IN ACCORDANCE WITH THE SPECIFICATIONS.

C: ⏚ IS PROTECTIVE BONDING TERMINAL.

D: TO KEEP THE DISTANCE MORE THAN 4mm BETWEEN PCB EDGE AND CUSTOMER'S CHASSIS.

E: OPTION MODEL(ZWS100BAF-*/R)
REMOTE ON/OFF CONTROL CONNECTOR (CN52) : B2B-XH-AM (J.S.T.)
MATCHING HOUSING : XHP-2 (J.S.T.)
MATCHING TERMINAL : BXH-001T-P0.6 (J.S.T.) OR SXH-001T-P0.6 (J.S.T.)
HAND CRIMPING TOOL : YC-110R (J.S.T.) OR YRS-110 (J.S.T.)
MATCHING HOUSING AND TERMINAL --- NOT INCLUDED WITH THE PRODUCT

Outline Drawing ZWS150BAF (Open Frame)

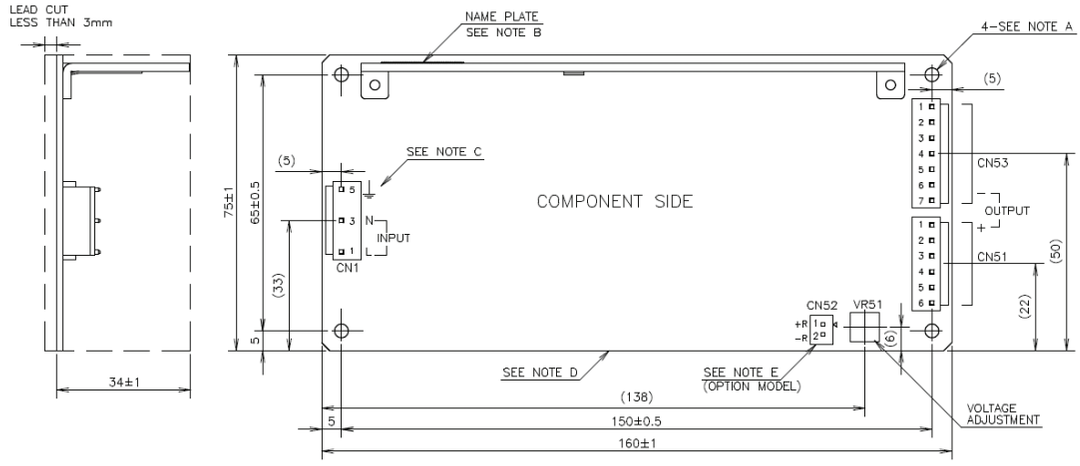

CONNECTORS USED:

PART DESCRIPTION	PART NAME	MANUFACT.	QTY
PIN HEADER (INPUT SIDE CN1)	B3P5-VH	J.S.T.	1
PIN HEADER(OUTPUT SIDE CN51)	B6P-VH	J.S.T.	1
PIN HEADER(OUTPUT SIDE CN53)	B7P-VH	J.S.T.	1

*OUTPUT CURRENT OF EACH CONNECTOR PIN MUST BE LESS THAN 5A.

MATCHING HOUSINGS, PINS & TOOL (NOT INCLUDED WITH THE PRODUCT):

PART DESCRIPTION	PART NAME	MANUFACT.	QTY
SOCKET HOUSING (CN1)	VHR-5N	J.S.T.	1
SOCKET HOUSING (CN51)	VHR-6N	J.S.T.	1
SOCKET HOUSING (CN53)	VHR-7N	J.S.T.	1
TERMINAL PINS	SVH-21T-P1.1	J.S.T.	16
	BVH-21T-P1.1		
HAND CRIMPING TOOL	YC-160R	J.S.T.	-

NOTES

A: 4-ø3.5 HOLES ARE FOR CUSTOMER'S CHASSIS MOUNTING HOLES. ALL MUST BE SCREWED IN ORDER TO CONFORM THE VIBRATION SPEC.

B: MODEL NAME, INPUT VOLTAGE RANGE, NOMINAL OUTPUT VOLTAGE, AND MAXIMUM OUTPUT CURRENT, COUNTRY OF MANUFACTURE AND SAFETY MARKING (FOR ONLY APPROVED PRODUCTS) ARE SHOWN HERE IN ACCORDANCE WITH THE SPECIFICATIONS.

C: ⏚ IS PROTECTIVE BONDING TERMINAL.

D: TO KEEP THE DISTANCE MORE THAN 4mm BETWEEN PCB EDGE AND CUSTOMER'S CHASSIS.

E: OPTION MODEL(ZWS150BAF-*/R)
REMOTE ON/OFF CONTROL CONNECTOR (CN52) : B2B-XH-AM (J.S.T.)
MATCHING HOUSING : XHP-2 (J.S.T.)
MATCHING TERMINAL : BXH-001T-P0.6 (J.S.T.) OR SXH-001T-P0.6 (J.S.T.)
HAND CRIMPING TOOL : YC-110R (J.S.T.) OR YRS-110 (J.S.T.)
MATCHING HOUSING AND TERMINAL --- NOT INCLUDED WITH THE PRODUCT

chanhvinh.com

Outline Drawing ZWS300BAF (Open Frame)

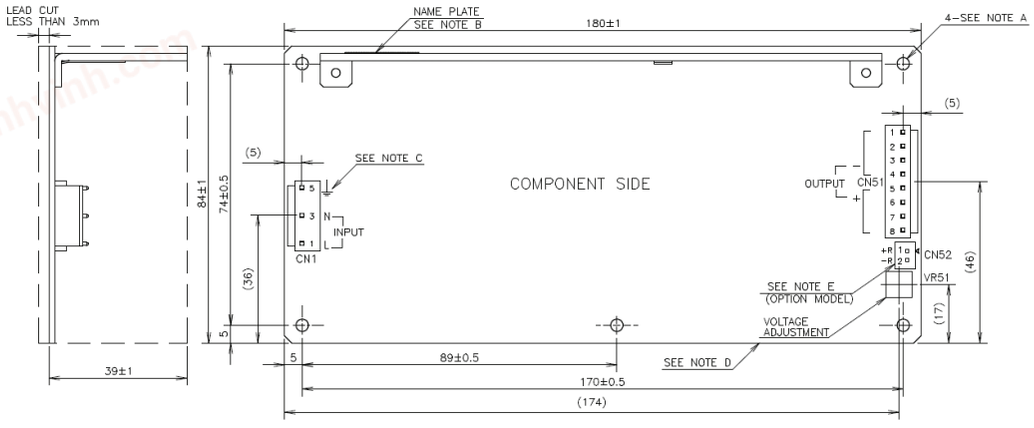

CONNECTORS USED:

PART DESCRIPTION	PART NAME	MANUFACT.	QTY
PIN HEADER (INPUT SIDE CN1)	B3P5-VH	JST	1
PIN HEADER(OUTPUT SIDE CN51)	B8P-VH	JST	1

MATCHING HOUSINGS (NOT INCLUDED WITH THE PRODUCT):

PART DESCRIPTION	PART NAME	MANUFACT.	QTY
SOCKET HOUSING (CN1)	VHR-5N	JST	1
SOCKET HOUSING (CN51)	VHR-8N	JST	1

MATCHING PINS & TOOL (NOT INCLUDED WITH THE PRODUCT):

■ INPUT SIDE (CN1)

PART DESCRIPTION	PART NAME	MANUFACT.	QTY
TERMINAL PINS	SVH-21T-P1.1 BVH-21T-P1.1	JST	3
HAND CRIMPING TOOL	YC-160R	JST	–

■ OUTPUT SIDE (CN51)
DEPENDING ON THE REQUIRED OUTPUT CURRENT, SELECT THE TERMINAL PIN (1) OR (2).
(1) WHEN EACH CONNECTOR PIN USED AT OUTPUT CURRENT IS LESS THAN 5A.

PART DESCRIPTION	PART NAME	MANUFACT.	QTY
TERMINAL PINS	SVH-21T-P1.1 BVH-21T-P1.1	JST	8
HAND CRIMPING TOOL	YC-160R	JST	–

(2) WHEN EACH CONNECTOR PIN USED AT OUTPUT CURRENT IS LESS THAN 7A.

PART DESCRIPTION	PART NAME	MANUFACT.	QTY
TERMINAL PINS	SVH-41T-P1.1 BVH-41T-P1.1	JST	8
HAND CRIMPING TOOL	YC-930R	JST	–

NOTES

A: 4-ø3.5 HOLES ARE FOR CUSTOMER'S CHASSIS MOUNTING HOLES. ALL MUST BE SCREWED IN ORDER TO CONFORM THE VIBRATION SPEC.

B: MODEL NAME, INPUT VOLTAGE RANGE, NOMINAL OUTPUT VOLTAGE, MAXIMUM OUTPUT CURRENT, COUNTRY OF MANUFACTURE AND SAFETY MARKING (FOR ONLY APPROVED PRODUCTS) ARE SHOWN HERE IN ACCORDANCE WITH THE SPECIFICATIONS.

C: ⏚ IS PROTECTIVE BONDING TERMINAL.

D: TO KEEP THE DISTANCE MORE THAN 4mm BETWEEN PCB EDGE AND CUSTOMER'S CHASSIS.

E: OPTION MODEL(ZWS300BAF-*/R)
REMOTE ON/OFF CONTROL CONNECTOR (CN52) : B2B-XH-AM (JST)
MATCHING HOUSING : XHP-2 (JST)
MATCHING TERMINAL : BXH-001T-P0.6 (JST) OR SXH-001T-P0.6 (JST)
HAND CRIMPING TOOL : YC-110R (JST) OR YRS-110 (JST)
MATCHING HOUSING AND TERMINAL --- NOT INCLUDED WITH THE PRODUCT

Outline Drawing ZWS300BAF/TA

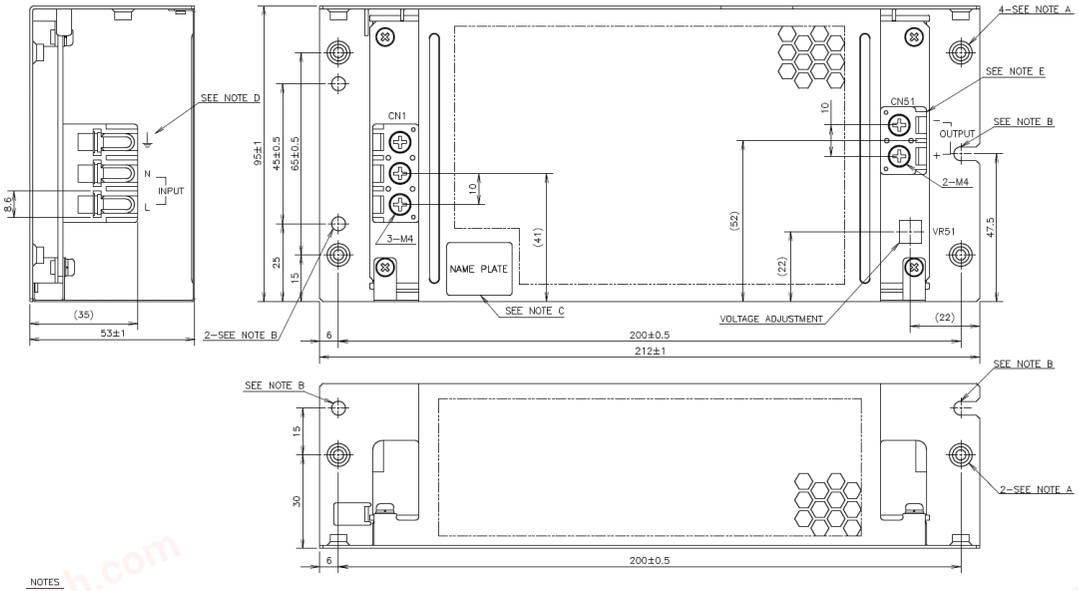

NOTES

A: M4 EMBOSSED TAPPED & COUNTERSINK HOLES (6) ARE FOR CUSTOMER'S CHASSIS MOUNTING.

B: ø4.5 HOLES (3) AND R2.25 SLOT HOLES (2) ARE FOR CUSTOMER'S CHASSIS MOUNTING HOLES.

C: MODEL NAME, INPUT VOLTAGE RANGE, NOMINAL OUTPUT VOLTAGE, MAXIMUM OUTPUT CURRENT, COUNTRY OF MANUFACTURE AND SAFETY MARKING (FOR ONLY APPROVED PRODUCTS) ARE SHOWN HERE IN ACCORDANCE WITH THE SPECIFICATIONS.

D: ⏚ IS PROTECTIVE BONDING TERMINAL.

E: OUTPUT TERMINAL INFORMATION (CN51)
* OUTPUT TYPE 12V/15V : TERMINAL 1
* OUTPUT TYPE 24V/36V/48V : TERMINAL 2

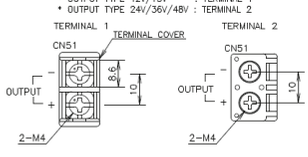

Click here for other outline drawings and technical information

chanhvinh.com

TDK-Lambda France SAS
Tel: +33 1 60 12 71 65
tlf.fr.powersolutions@tdk.com
www.emea.lambda.tdk.com/fr

Italy Sales Office
Tel: +39 02 61 29 38 63
tlf.it.powersolutions@tdk.com
www.emea.lambda.tdk.com/it

Netherlands
tlf.nl.powersolutions@tdk.com
www.emea.lambda.tdk.com/nl

TDK-Lambda Germany GmbH
Tel: +49 7841 666 0
tlg.powersolutions@tdk.com
www.emea.lambda.tdk.com/de

Austria Sales Office
Tel: +43 2256 655 84
tlg.at.powersolutions@tdk.com
www.emea.lambda.tdk.com/at

Switzerland Sales Office
Tel: +41 44 850 53 53
tlg.ch.powersolutions@tdk.com
www.emea.lambda.tdk.com/ch

Nordic Sales Office
Tel: +45 8853 8086
tlg.dk.powersolutions@tdk.com
www.emea.lambda.tdk.com/dk

TDK-Lambda UK Ltd.
Tel: +44 (0) 12 71 85 66 66
tlu.powersolutions@tdk.com
www.emea.lambda.tdk.com/uk

TDK-Lambda Ltd.
Tel: +9 723 902 4333
tli.powersolutions@tdk.com
www.emea.lambda.tdk.com/il-en

TDK-Lambda Americas
Tel: +1 800-LAMBDA-4 or 1-800-526-2324
tla.powersolutions@tdk.com
www.us.lambda.tdk.com

TDK Electronics do Brasil Ltda
Tel: +55 11 3289-9599
sales.br@tdk-electronics.tdk.com
www.tdk-electronics.tdk.com/en

TDK-Lambda Corporation
Tel: +81-3-6778-1113
www.jp.lambda.tdk.com

TDK-Lambda (China) Electronics Co. Ltd.
Tel: +86 21 6485-0777
tlc.powersolutions@tdk.com
www.lambda.tdk.com.cn

TDK-Lambda Singapore Pte Ltd.
Tel: +65 6251 7211
tls.marketing@tdk.com
www.sg.lambda.tdk.com

TDK India Private Limited, Power Supply Division
Tel: +91 80 4039-0660
mathew.philip@tdk.com
www.sg.lambda.tdk.com