chanhvinh.com

TDK·Lambda RSKN Series

Single phase 250Vac 6 to 30A EMC Filters

https://product.tdk.com/en/products/emc/emc/power-line/tec_data/tdk_nf_rskn.html
https://www.emea.lambda.tdk.com/uk/products/r-series



Industrial Test LED COMM Broadcast

The RSKN single-phase, wide band, two stage high attenuation EMC filters are enclosed in a low profile metal case and are rated for 250Vac. Four current ratings of 6 to 30A enables the optimum attenuation to match the current rating. The RSKN series uses a nano crystal core for enhanced performance. The connection terminals are integrated into the case and a terminal cover provided for safety protection to avoid lost hardware. The RSKN series is UL certified for a short circuit current rating of 5,000A with the appropriate breaker.

Features	Benefits
• Wide Band, High Attenuation	• Improved Performance
• 6 to 30A Current Ratings	• Optimizes the Attenuation for the Current Rating
• Integrated Terminal Block	• No Lost Hardware
• Safety Certified	• Global Use

Model Selector

Model	Rated Current (A)	SCCR (kA)	HV Pulse Protection	Maximum DC Resistance (mΩ)	Attenuation frequency range (MHz)	
					Common mode at 30dB	Differential mode at 25dB
RSKN-2006	6	5	Y	300	0.2 to 30	0.4 to 30
RSKN-2010	10	5	Y	100	0.2 to 30	0.5 to 30
RSKN-2020	20	5	Y	20	0.3 to 30	0.4 to 30
RSKN-2030	30	5	Y	10	0.4 to 30	0.4 to 30

RSKN	-	2	06
Series Name		Rated Voltage 2 = 250Vac	Rated Current 006 = 6A 030 = 30A

Related Single Phase Filter Products

Type	Options								
	Current Raiting (A)	Series	Low Leakage	Faston on terminals	Wire leads	DIN Rail Mount	Fused	Discharge Resistor	Metal case
Board mount line filter, HV Pulse	0.5 - 6	RSAG							
Board mount line filter	0.5 - 6	RSEG							
General purpose with faston terminals	6	RSEC							
General purpose	0.5 - 6	RSEL	Y	Y	Y				Y
HV pulse protection	0.5 - 6	RSAL	Y	Y	Y				
Power Entry Module with line filter	3, 6, 10	RPE	Y				Y	Y	
Power Entry Module with line filter, HV Pulse	3, 6, 10	RPA	Y					Y	
Multipurpose	3 - 300	RSEN	Y (Up to 30A)			Y (Up to 30A)			
Multipurpose with HV pulse protection	3 - 60	RSAN	Y (Up to 30A)			Y (Up to 30A)			
High attenuation	3 - 300	RSHN	Y (Up to 30A)			Y (Up to 30A)			
High attenuation with pulse protection	3 - 300	RSMN	Y (Up to 30A)			Y (Up to 30A)			
Wide band, high attenuation	6 - 30	RSKN							

* Separate mounting bracket

Click here for TDK-Lambda three phase filters

chanhvinh.com

Specification

Model		RSKN-2006	RSKN-2010	RSKN-2020	RSKN-2030
Input					
Rated Voltage	Vac/Vdc	250 (Safety certified for AC input only)			
Input Frequency	Hz	47 - 63			
Leakage Current	mA	<1 at 250Vac, 60Hz			
Safety Certifications and Markings	-	UL1283, CSA C22.2 No.8 (cUL), EN60939-1 / -2 (SEMKO), conforms to RoHS Directive			
Environmental					
Operating Temperature	°C	-25 to +85. See derating curves below			
Storage Temperature	°C	-30 to +85			
Humidity (non condensing)	%RH	Operating: 30 - 90, storage: 10 - 95			
Cooling	-	Convection			
Withstand Voltage	Vac	2,500 input to earth			
Isolation Resistance (For 1 minute)	MΩ	>100 at 500Vdc			
Vibration	-	10-55Hz Amplitude 1.5mm, Sweep for 1 min. X, Y and Z directions for 2 hours each			
Other					
Weight (Typ)	g	220	310	530	660
Size (LxWxH)	mm	107 x 47 x 26	117 x 47 x 30	151 x 52 x 35	151 x 67 x 35
Size (LxWxH)	Inches	4.21 x 1.85 x 1.02	4.61 x 1.85 x 1.18	5.94 x 2.05 x 1.38	5.94 x 2.64 x 1.38
Connectors	-	M4 Screw terminals			
MIL-HDBK-217F NOTICE2	Hours	RSKN-2006: 5,137,690, RSKN-2030 : 4,641,6 64			
Warranty	Years	5			

Notes
See website for detailed specifications, test methods and installation manual RSKN technical files

Mechanical Specification

Derating Curve RSKN-2006/ -2010

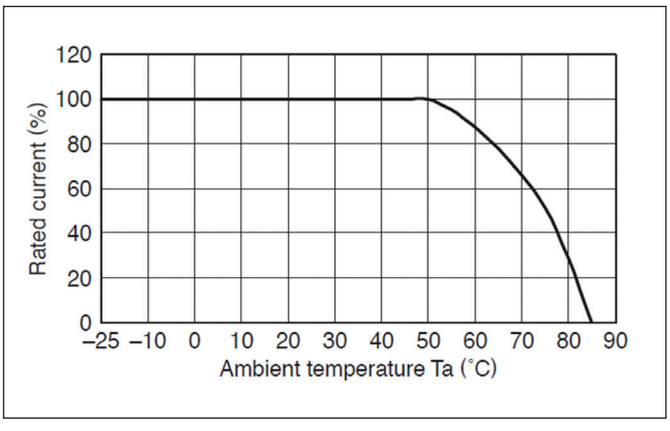

Derating Curve RSKN-2020/ -2030

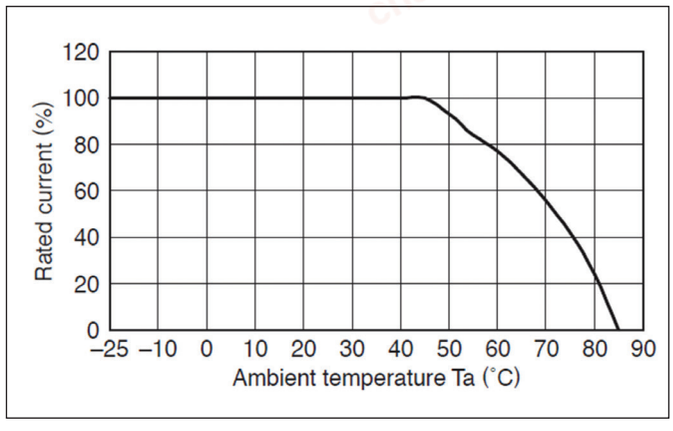

Schematic

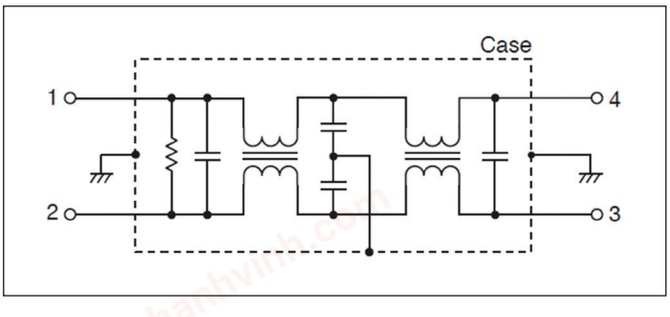

chanhvinh.com

RSKN-2006/2010 Outline Drawing

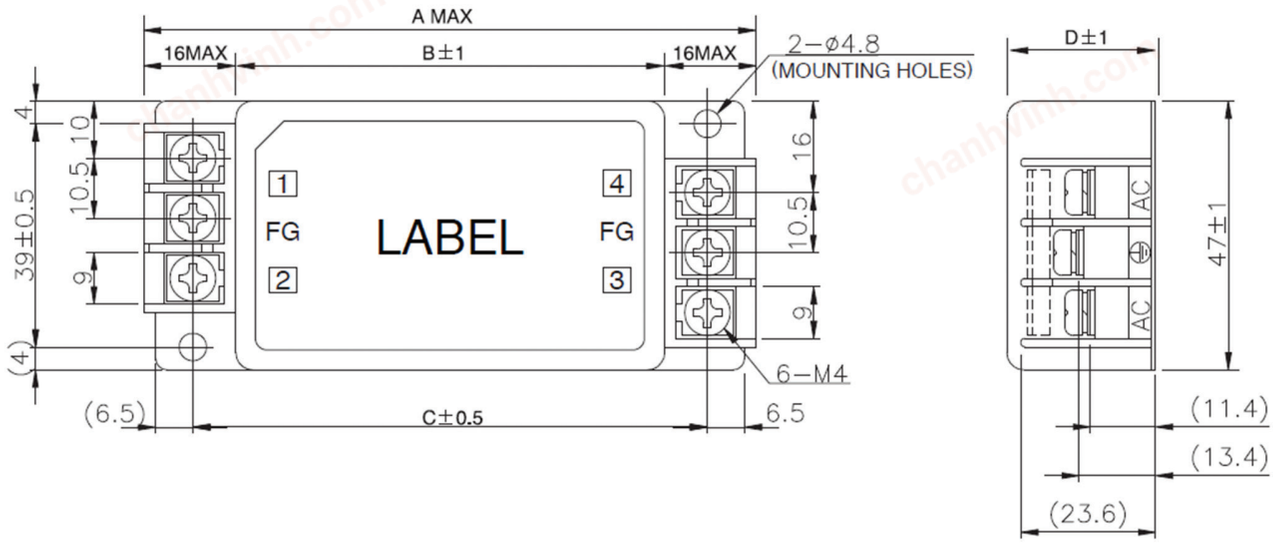

Part No.	A	B	C	D
RSKN-2006	107	75	90	26
RSKN-2010	117	85	100	30

RSKN-2020 Outline Drawing

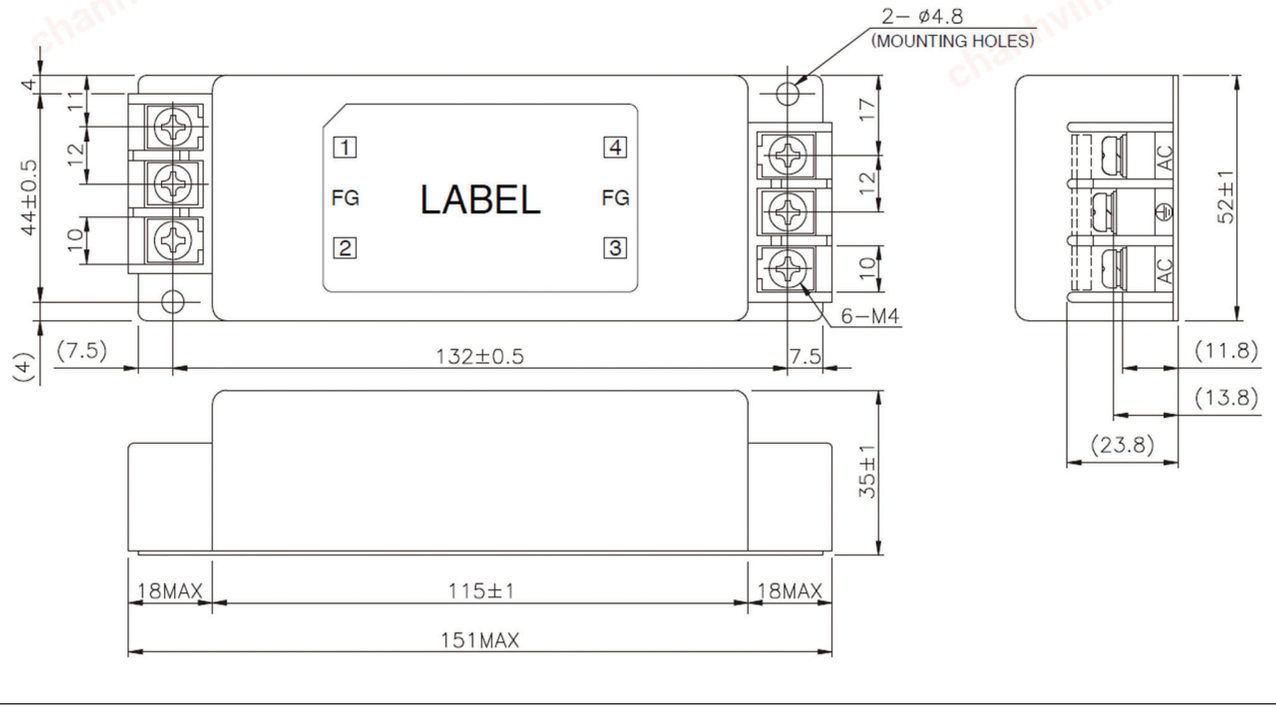

chanhvinh.com

RSKN-2030 Outline Drawing

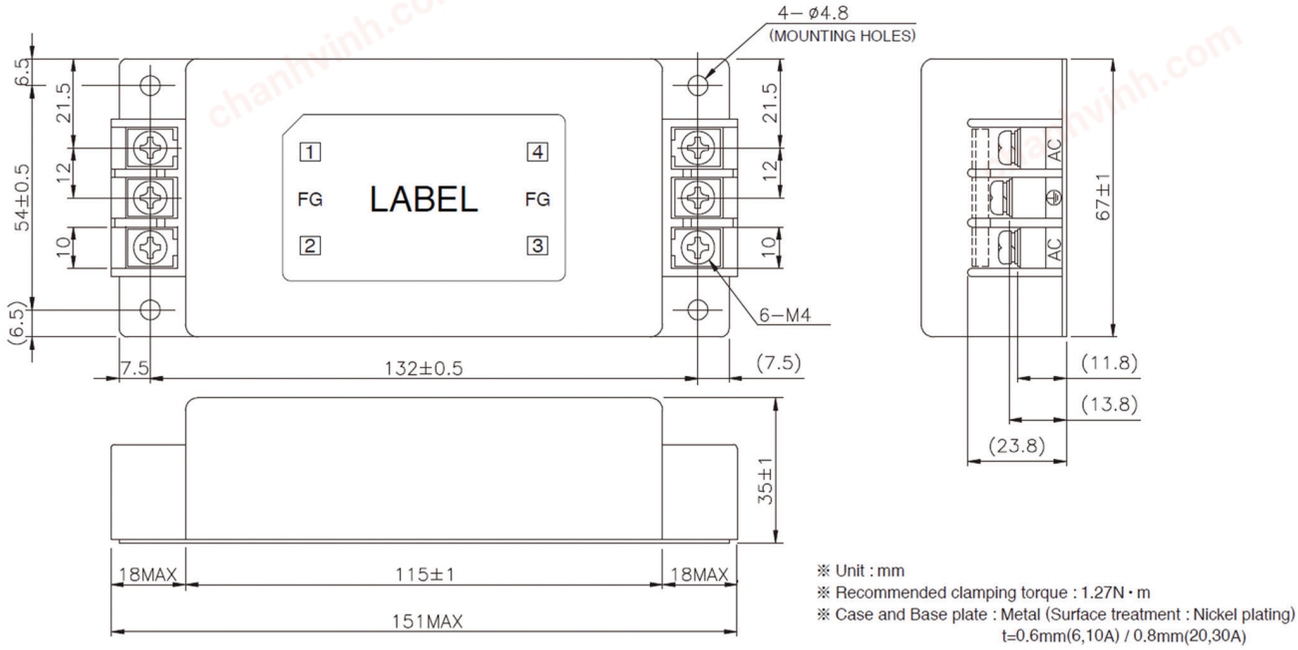

※ Unit : mm
※ Recommended clamping torque : 1.27N・m
※ Case and Base plate : Metal (Surface treatment : Nickel plating)
t=0.6mm(6,10A) / 0.8mm(20,30A)

chanhvinh.com

RSKN Attenuation vs. Frequency

RSKN-2006

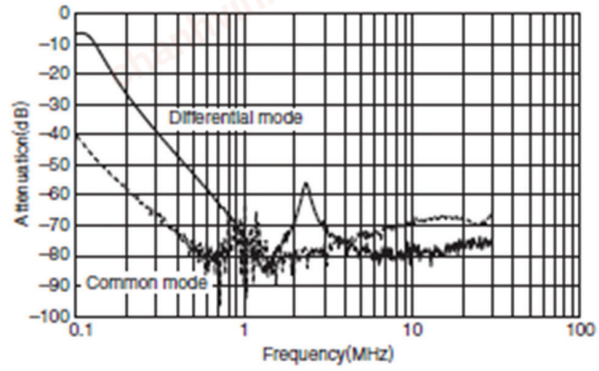

RSKN-2010

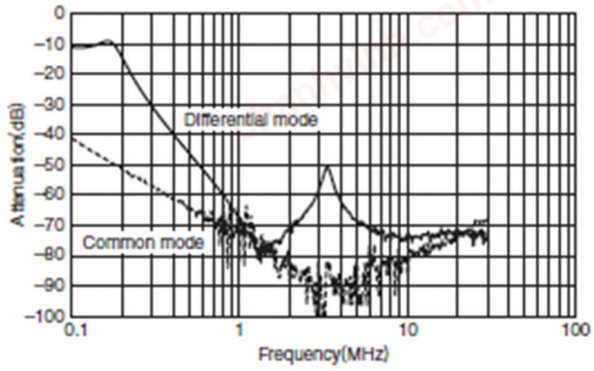

RSKN-2020

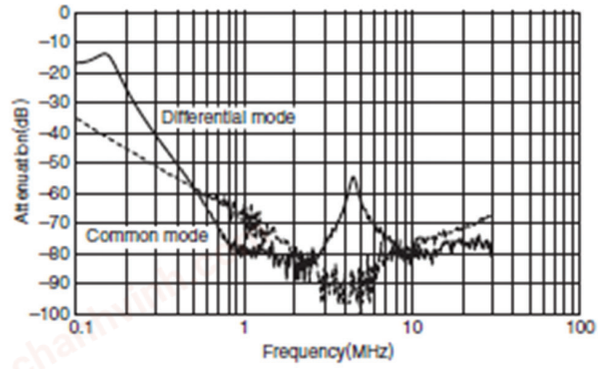

RSKN-2030

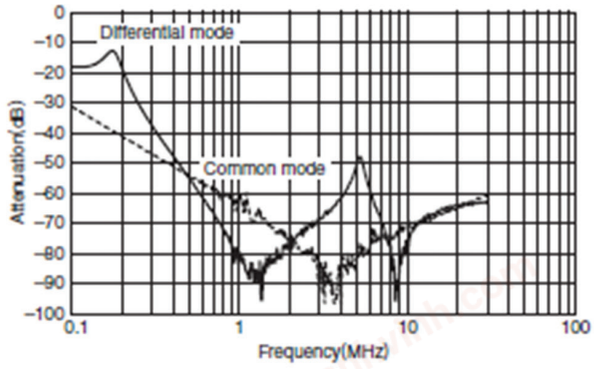

RSKN Pulse Attenuation Characteristics

RSKN-2006

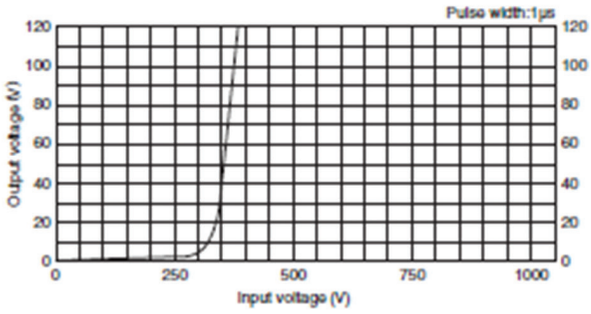

RSKN-2010

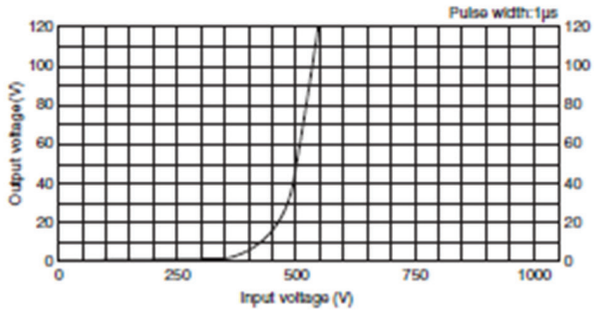

RSKN-2020

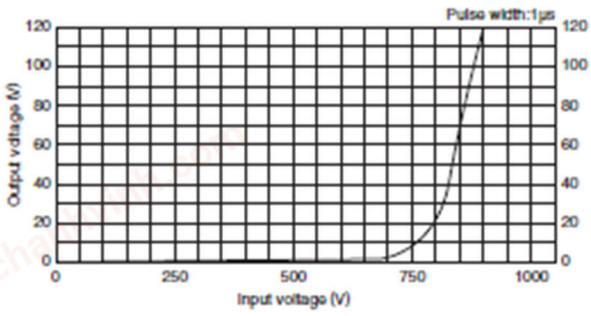

RSKN-2030

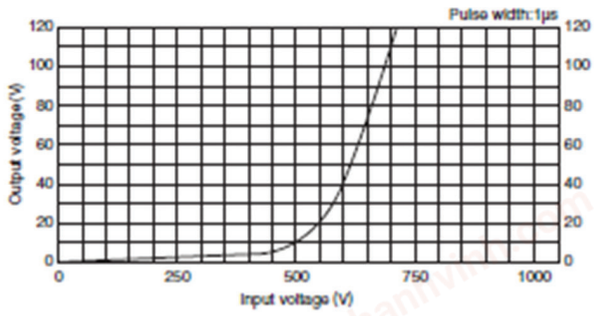

chanhvinh.com

TDK-Lambda France SAS
Tel: +33 1 60 12 71 65
tlf.fr-powersolutions@tdk.com
www.emea.lambda.tdk.com/fr

Italy Sales Office
Tel: +39 02 61 29 38 63
tlf.it-powersolutions@tdk.com
www.emea.lambda.tdk.com/it

Netherlands
tlf.nl-powersolutions@tdk.com
www.emea.lambda.tdk.com/nl

TDK-Lambda Germany GmbH
Tel: +49 7841 666 0
tlg.powersolutions@tdk.com
www.emea.lambda.tdk.com/de

Austria Sales Office
Tel: +43 2256 655 84
tlg.at-powersolutions@tdk.com
www.emea.lambda.tdk.com/at

Switzerland Sales Office
Tel: +41 44 850 53 53
tlg.ch-powersolutions@tdk.com
www.emea.lambda.tdk.com/ch

Nordic Sales Office
Tel: +45 8853 8086
tlg.dk-powersolutions@tdk.com
www.emea.lambda.tdk.com/dk

TDK-Lambda UK Ltd.
Tel: +44 (0) 12 71 85 66 66
tlu.powersolutions@tdk.com
www.emea.lambda.tdk.com/uk

TDK-Lambda Ltd.
Tel: +9 723 902 4333
tli.powersolutions@tdk.com
www.emea.lambda.tdk.com/il-en

TDK-Lambda Americas
Tel: +1 800-LAMBDA-4 or 1-800-526-2324
tla.powersolutions@tdk.com
www.us.lambda.tdk.com

TDK Electronics do Brasil Ltda
Tel: +55 11 3289-9599
sales.br@tdk-electronics.tdk.com
www.tdk-electronics.tdk.com/en

TDK-Lambda Corporation
Tel: +81-3-6778-1113
www.jp.lambda.tdk.com

TDK-Lambda (China) Electronics Co. Ltd.
Tel: +86 21 6485-0777
tlc.powersolutions@tdk.com
www.lambda.tdk.com.cn

TDK-Lambda Singapore Pte Ltd.
Tel: +65 6251 7211
tls.marketing@tdk.com
www.sg.lambda.tdk.com

TDK India Private Limited, Power Supply Division
Tel: +91 80 4039-0660
mathew.philip@tdk.com
www.sg.lambda.tdk.com

chanhvinh.com

For Additional Information, please visit
https://product.tdk.com/en/power/