chanhvinh.com

TDK·Lambda PXC-M Series

3-10W Medical DC-DC Converters

https://product.tdk.com/en/power/pxc-m
www.emea.tdk-lambda.com/pxc-m



Medical COMM

The PXC-M series of medical DC-DC converters feature a wide 4:1 input range in a compact 1.25 x 0.8" (31.8 x 20.3mm) industry standard package. With 5kV input to output isolation, 2uA touch current and a low off-load power draw, these encapsulated modules are ideal for fixed and portable applications.

Features	Benefits
• Wide 4:1 Input Range	• Supports Dual 12/24V or 24/48 System Voltages
• Compact 1.25" x 0.8" Industry Package	• Less Board Area Needed
• Certified to IEC60601-1 and ES60601-1	• Suitable For Medical Applications
• 2 x MOPP Isolation	• High Input to Output Isolation
• Low No Load Power Consumption	• Longer Battery Life

Model Selector

Model	Input Voltage (V)	Output Voltage (V)	Maximum Current (A)	Maximum Power (W)	No Load Current (mA)	Efficiency (%)	Maximum Load Capacitance (uF)
Single Outputs							
PXC-M03-24WS3P3	9 - 36	3.3	1	3.3	6	82	1050
PXC-M06-24WS3P3	9 - 36	3.3	1.8	5.9	6	83	2100
PXC-M10-24WS3P3	9 - 36	3.3	2.5	8.3	6	83	3000
PXC-M03-24WS05	9 - 36	5	0.6	3	6	84.5	750
PXC-M06-24WS05	9 - 36	5	1.2	6	6	86	1500
PXC-M10-24WS05	9 - 36	5	2	10	6	86.5	2500
PXC-M03-24WS12	9 - 36	12	0.25	3	6	87	130
PXC-M06-24WS12	9 - 36	12	0.5	6	6	89	260
PXC-M10-24WS12	9 - 36	12	0.83	10	6	89	430
PXC-M03-24WS15	9 - 36	15	0.2	3	6	87	100
PXC-M06-24WS15	9 - 36	15	0.4	6	6	89	210
PXC-M10-24WS15	9 - 36	15	0.67	10.1	6	89	350
PXC-M03-24WS24	9 - 36	24	0.125	3	6	87	39
PXC-M06-24WS24	9 - 36	24	0.25	6	6	88.5	75
PXC-M10-24WS24	9 - 36	24	0.416	10	6	89	125
PXC-M03-48WS3P3	18 - 75	3.3	1	3.3	4	81	1050
PXC-M06-48WS3P3	18 - 75	3.3	1.8	5.9	4	82.5	2100
PXC-M10-48WS3P3	18 - 75	3.3	2.5	8.3	4	82.5	3000
PXC-M03-48WS05	18 - 75	5	0.6	3	4	84	750
PXC-M06-48WS05	18 - 75	5	1.2	6	4	86.5	1500
PXC-M10-48WS05	18 - 75	5	2	10	4	86.5	2500
PXC-M03-48WS12	18 - 75	12	0.25	3	4	87	130
PXC-M06-48WS12	18 - 75	12	0.5	6	4	88	260
PXC-M10-48WS12	18 - 75	12	0.83	10	4	89	430
PXC-M03-48WS15	18 - 75	15	0.2	3	4	86.5	100
PXC-M06-48WS15	18 - 75	15	0.4	6	4	88.5	210
PXC-M10-48WS15	18 - 75	15	0.67	10.1	4	89	350
PXC-M03-48WS24	18 - 75	24	0.125	3	4	86.5	39
PXC-M06-48WS24	18 - 75	24	0.25	6	4	88	75
PXC-M10-48WS24	18 - 75	24	0.416	10	4	88.5	125

chanhvinh.com

Model Selector

Model	Input Voltage (V)	Output Voltage (V)	Maximum Current (A)	Maximum Power (W)	No Load Current (mA)	Efficiency (%)	Maximum Load Capacitance (uF)
Dual Outputs							
PXC-M03-24WD05	9 - 36	±5	±0.3	3	6	83	±430
PXC-M06-24WD05	9 - 36	±5	±0.6	6	6	85	±860
PXC-M10-24WD05	9 - 36	±5	±1	10	6	85	±1440
PXC-M03-24WD12	9 - 36	±12	±0.125	3	6	87	±75
PXC-M06-24WD12	9 - 36	±12	±0.25	6	6	88.5	±150
PXC-M10-24WD12	9 - 36	±12	±0.416	10	6	89	±250
PXC-M03-24WD15	9 - 36	±15	±0.1	3	6	86	±56
PXC-M06-24WD15	9 - 36	±15	±0.2	6	6	88.5	±110
PXC-M10-24WD15	9 - 36	±15	±0.333	10	6	88	±180
PXC-M03-48WD05	18 - 75	±5	±0.3	3	4	83	±430
PXC-M06-48WD05	18 - 75	±5	±0.6	6	4	85	±860
PXC-M10-48WD05	18 - 75	±5	±1	10	4	85	±1440
PXC-M03-48WD12	18 - 75	±12	±0.125	3	4	86	±75
PXC-M06-48WD12	18 - 75	±12	±0.25	6	4	88	±150
PXC-M10-48WD12	18 - 75	±12	±0.416	10	4	88	±250
PXC-M03-48WD15	18 - 75	±15	±0.1	3	4	86	±56
PXC-M06-48WD15	18 - 75	±15	±0.2	6	4	87	±110
PXC-M10-48WD15	18 - 75	±15	±0.333	10	4	88	±180

PXC-M	10	-24W	S	05	-A

03	3W Output Power
06	6W Output Power
10	10W Output Power

-24W	9 - 36V input
-48W	18 - 75V input

S	Single Output
D	Dual Output

3P3	3.3V Output Voltage
05	5V Output Voltage
12	12V Output Voltage
15	15V Output Voltage
24	24V Output Voltage

Blank	Pinout style B (No remote on/off & no trim pin)
-A	Pinout style A
-P	Pinout style B (Positive remote on/off & no trim pin)
-T	Pinout style B (Trim pin & no remote on/off)
-PT	Pinout style B (Positive remote on/off & trim pin)

Preferred model

Blank Primarily stocked in EMEA

-A Primarily stocked by North American distributors

Specifications

Model		PXC-M03	PXC-M06	PXC-M10
Input				
Input Voltage Range	Vdc	See model selector table		
Input Surge Voltage	Vdc	-24W models: 50, -48W models: 100. (100ms maximum)		
Input Shutdown Voltage	Vdc	-24W models: 7 - 8.8, -48W models: 15 - 17.5		
Start-up Time	ms	30 maximum		
Touch Current	uA	2 maximum		
No Load Power Consumption	W	See model selector table		
Efficiency	-	See model selector table		
Conducted & Radiated EMI	-	EN55011, EN55032, Class A and FCC part 18 without external components. Class B with external components		
Immunity	-	See immunity section		
Safety Certifications and Markings	-	IEC/EN60601-1, ES60601-1, CE Mark and UKCA		

Immunity

Test	Standard	Test Level	Criteria	Notes
ESD	EN61000-4-2	Air ± 15kV and Contact ± 8kV	A	-
Radiated Susceptibility	EN61000-4-3	10V/m	A	-
Electrical Fast Transient Burst	EN61000-4-4	± 2kV	A	5V outputs: With an input filter of one 1000µF capacitor and a reverse diode (Vishay V10P45) in parallel.
Surge	EN61000-4-5	± 2kV	A	12/24V outputs: With an input filter of one 470µF capacitor. 48V outputs: With an input filter of one 330µF capacitor.
Conducted Susceptibility	EN61000-4-6	10 Vrms	A	-
Magnetic Fields	EN61000-4-8	100A/m continuous; 1000A/m 1s	A	-

chanhvinh.com

Specifications

Model		PXC-M03	PXC-M06	PXC-M10
Output				
Output Voltage Tolerance	%	±1		
Output Voltage Adjustment	-	±10% (-10% +20% on 15V & 24V single output models)		
Switching Frequency	kHz	150 (±15)	250 (±25)	300 (±30)
Line Regulation	%	Single output: ±0.2. Dual output: +/-0.5		
Load Regulation	%	Single output: ±0.2. Dual output: +/-1		
Cross Regulation	%	Dual output: ±5 (Asymmetrical 25% to 100% load change)		
External Load Capacitance	uF	See model selector table		
Ripple & Noise (1)	mV	3.3/5V outputs: 30, 12/15V outputs: 40, 24V outputs: 50		
Temperature Coefficient	%/°C	±0.02		
Minimum Load	-	No minimum load required		
Transient Loading	-	250us recovery time for a 25% load change		
Overcurrent Protection	-	Hiccup mode. 150%		
Overvoltage Protection	V	Zener clamp method. Single Output: 3.3V: 3.7-5V, 5V: 5.6-7V, 12V: 13.5-16V, 15V: 18.3-22V, 24V: 29.1-34.5V Dual Output: 5V: 5.6-7V, 12V: 13.5-18.2V, 15V: 17-22V"		
Remote Sense	-	No remote sense		
Remote On/Off	-	Only for B-type Pin connection option (-P or -PT) Positive Logic: ON: Open or 0-1.2V, OFF 2.2-12V		
Parallel Operation	-	Not possible		
Environmental				
Operating Temperature (2)	°C	-40 to +105°C		
		Derating required above 94°C	Derating required above 88°C	Derating required above 77°C
Maximum Case Temperature	°C	105. Measured centrally on the upper case (module top view)		
Thermal Impedance	°C/W	18		
Storage Temperature	°C	-55 to +125		
Humidity (non condensing)	%RH	5 - 95 (Operating & Storage)		
Cooling	-	Convection		
Altitude	m	5,000 (operating)		
Withstand Voltage (For 1 minute)	Vac	Input to output 5,000 (2xMOPPs)		
Isolation Capacitance	pF	17		
Vibration (Operating)	-	MIL-STD-810F		
Thermal Shock	-	MIL-STD-810F		
Other				
Weight (Typ)	g	14		
Size (LxWxH)	mm	31.8 x 20.3 x 10.5		
Size (LxWxH)	Inches	1.25 x 0.8 x 0.41		
Case Material	-	Non-conductive black plastic. (Silicone (UL94 V-0) potting)		
MTBF - MIL-HDBK-217F, Full Load	Hours	6,444,000	4,718,000	3,849,000
Warranty	yrs	5		

Notes

See website for detailed specifications, test methods and installation manual

(1): Measured with a 20MHz bandwidth oscilloscope across a 10uF 25V X7R MLCC (4.7uF 50V for 24V models)

(2). The case temperature must be confirmed in end application. The product rating may be affected by physical obstructions near the module.

chanhvinh.com

Outline Drawing, Pinout Style A

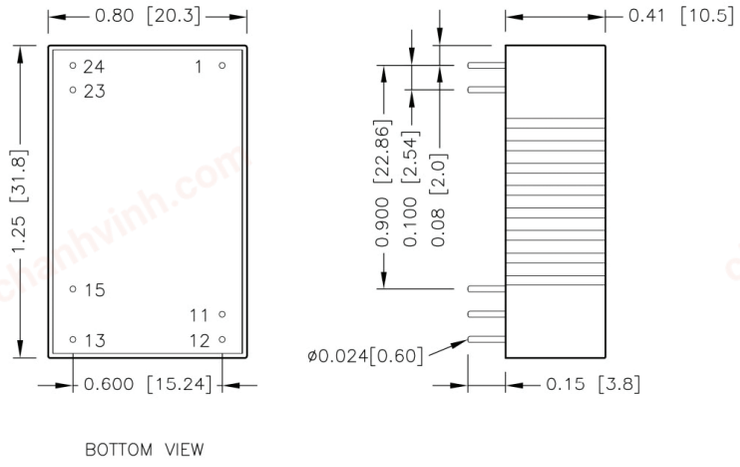

Outline Drawing, Pinout Style B

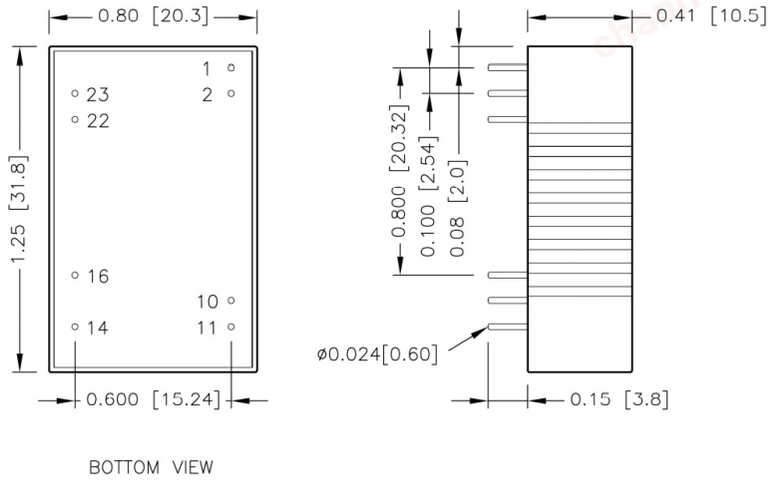

Pinout (Style A)

PIN	Function	
	Single	Dual
1	+Vin	
11	No pin	Com
12	-Vout	No pin
13	+Vout	-Vout
15	No pin	+Vout
23	-Vin	
24	-Vin	

Pinout (Style B)

PIN	Function	
	Single	Dual
1	Ctrl (Option) / No pin*	
2	-Vin	
10	Trim (Option) / No pin*	
11	No pin / NC**	-Vout
14	+Vout	
16	-Vout	Com
22	+Vin	
23	+Vin	

* If no Ctrl or Trim option, there is no pin on the corresponding pin number.

** No pin for Trim option (-T and -PT) and NC for models without Trim option

1. All dimensions in inch (mm)
2. Tolerance: X.XX±0.02 (X.X±0.5)
   X.XXX±0.01 (X.XX±0.25)
3. Pin dimension tolerance ±0.004(0.10)

chanhvinh.com

TDK·Lambda

Trusted • Innovative • Reliable



TDK-Lambda France SAS
Tel: +33 1 60 12 71 65
tlf.fr-powersolutions@tdk.com
www.emea.lambda.tdk.com/fr



Italy Sales Office
Tel: +39 02 61 29 38 63
tlf.it-powersolutions@tdk.com
www.emea.lambda.tdk.com/it



Netherlands
tlf.nl-powersolutions@tdk.com
www.emea.lambda.tdk.com/nl



TDK-Lambda Germany GmbH
Tel: +49 7841 666 0
tlg.powersolutions@tdk.com
www.emea.lambda.tdk.com/de



Austria Sales Office
Tel: +43 2256 655 84
tlg.at-powersolutions@tdk.com
www.emea.lambda.tdk.com/at



Switzerland Sales Office
Tel: +41 44 850 53 53
tlg.ch-powersolutions@tdk.com
www.emea.lambda.tdk.com/ch



Nordic Sales Office
Tel: +45 8853 8086
tlg.dk-powersolutions@tdk.com
www.emea.lambda.tdk.com/dk



TDK-Lambda UK Ltd.
Tel: +44 (0) 12 71 85 66 66
tlu.powersolutions@tdk.com
www.emea.lambda.tdk.com/uk



TDK-Lambda Ltd.
Tel: +9 723 902 4333
tli.powersolutions@tdk.com
www.emea.lambda.tdk.com/il-en



TDK-Lambda Americas
Tel: +1 800-LAMBDA-4 or 1-800-526-2324
tla.powersolutions@tdk.com
www.us.lambda.tdk.com



TDK Electronics do Brasil Ltda
Tel: +55 11 3289-9599
sales.br@tdk-electronics.tdk.com
www.tdk-electronics.tdk.com/en



TDK-Lambda Corporation
Tel: +81-3-6778-1113
www.jp.lambda.tdk.com



TDK-Lambda (China) Electronics Co. Ltd.
Tel: +86 21 6485-0777
tlc.powersolutions@tdk.com
www.lambda.tdk.com.cn



TDK-Lambda Singapore Pte Ltd.
Tel: +65 6251 7211
tls.marketing@tdk.com
www.sg.lambda.tdk.com



TDK India Private Limited, Power Supply Division
Tel: +91 80 4039-0660
mathew.philip@tdk.com
www.sg.lambda.tdk.com

chanhvinh.com