chanhvinh.com

TDK·Lambda

PH-A Series

50W to 600W, 200 to 425VDC Input DC-DC Converters

https://product.tdk.com/en/power/ph-a
www.emea.lambda.tdk.com/ph-a





Industrial COTS COMM

The PH-A series of isolated DC-DC converters operate from a wide range 200 to 425Vdc input and are available in multiple power levels from 50 to 600W. Output voltages cover 3.3V to 48V and can be adjusted using the trim terminal by up to -60% to +20%. All models feature remote sense and remote on/off and can be conduction cooled to a cold plate or mounted with an optional heatsink. The 300 and 600W models are certified to EN 62477-1 (OVC III) for use in industrial robots connected to an incoming distribution panel, avoiding the requirement for an isolation transformer. These efficient converters are also well suited for HVDC (High Voltage Direct Current) power transmission systems and renewable energy applications.

Features	Benefits
• Wide Range 200 to 425Vdc Input	• Suitable for HVDC Applications
• Baseplate Cooled	• Can be Conduction or Convection Cooled (With an Optional Heatsink)
• -40 to 100°C Baseplate Temperature	• Operates in Harsh Environments
• Certified to IEC/EN62477-1 (OVC III)	• No External Transformer Needed
• Up to 93% Efficient	• Easier To Cool In the End System

Model Selector

Model	Output Voltage (V)	Adjustment Range (V)	Maximum Current (A)	Maximum Power (W)	Input Current (A) 280V input, 100% load	Efficiency (%) 280V input, 100% load	Overvoltage Protection (%) (2)
PH75A280-3.3	3.3	2.97 - 3.96	15	49.5	0.22	83	130 - 200
PH100A280-3.3	3.3	2.97 - 3.96	20	66	0.29	83	130 - 200
PH50A280-5	5	4 - 6	10	50.0	0.21	86	125 - 150
PH75A280-5	5	4 - 6	15	75.0	0.32	86	125 - 150
PH100A280-5	5	4 - 6	20	100.0	0.42	86	125 - 150
PH300A280-5	5	2.5 - 6	60	300.0	1.22	89	125 - 145
PH50A280-12	12	9.6 - 13.2	4.2	50.4	0.2	89	115 - 145
PH75A280-12	12	9.6 - 13.2	6.3	75.6	0.31	89	115 - 145
PH100A280-12	12	9.6 - 13.2	8.4	100.8	0.41	89	115 - 145
PH150A280-12	12	9.6 - 13.2	12.5	150.0	0.62	88	115 - 145
PH300A280-12	12	4.8 - 14.4	25	300.0	1.22	89	125 - 145
PH75A280-15	15	12 - 16.5	5	75.0	0.3	90	115 - 145
PH150A280-15	15	12 - 16.5	10	150.0	0.6	90	115 - 145
PH50A280-24	24	19.2 - 26.4	2.1	50.4	0.2	89	115 - 145
PH75A280-24	24	19.2 - 26.4	3.2	76.8	0.31	90	115 - 145
PH100A280-24	24	19.2 - 26.4	4.2	100.8	0.4	90	115 - 145
PH150A280-24	24	19.2 - 26.4	6.3	151.2	0.61	89	115 - 145
PH300A280-24	24	9.6 - 28.8	12.5	300.0	1.2	90.5	125 - 145
PH600A280-24	24	14.4 - 28.8	25	600.0	2.33	93	125 - 145
PH75A280-28	28	22.4 - 30.8	2.7	75.6	0.3	90	115 - 145
PH150A280-28	28	22.4 - 30.8	5.4	151.2	0.61	90	115 - 145
PH300A280-28	28	11.2 - 33.6	10.8	302.4	1.2	91	125 - 145
PH50A280-48	48	38.4 - 52.8	1.1	52.8	0.21	89	115 - 145
PH75A280-48	48	38.4 - 52.8	1.6	76.8	0.31	90	115 - 145
PH100A280-48	48	38.4 - 52.8	2.1	100.8	0.4	90	115 - 145
PH150A280-48	48	38.4 - 52.8	3.2	153.6	0.6	90	115 - 145
PH300A280-48	48	19.2 - 57.6	6.3	302.4	1.19	92	125 - 145

chanhvinh.com

Options

Suffix	Description
Blank	M3 tapped mounting inserts
/T	3.3mm non-threaded inserts

Heat Sink Accessories

Suffix	Description
HAQ-10T	PH50A to 150A 25mm transverse fins
HAH-10T	PH300A and 600A 25mm transverse fins
HAH-15L	PH300A and 600A 38mm longitudinal fins

Related Products

Type	Part Number	Description
DC-DC Converters	PH-A series	1200W, 200 to 425V Input DC-DC Converters
DC-DC Converters	CN200B110 to CN300B110	200 to 300W, 43 to 160V Input DC-DC Converters

Specifications

Model		PH50A to PH150A	PH300A to PH600A
Input			
Input Voltage range	Vdc	200 - 425	
Input Current (280Vdc)	A	See model selector	
No Load Power Consumption	W	See evaluation data on website	
Efficiency (280Vdc)	-	See model selector	
Safety Certifications and Markings	-	IEC/UL/CSA/EN62368-1, 60950-1, EN62477-1 OVC III (PH300A and 600A only), CE Mark and UKCA Mark	
Output			
Line Regulation	mV	3.3V - 5V: 10; 12V: 24; 15V: 30, 24V: 48, 28V: 56, 48V: 96	
Load Regulation	mV	3.3V - 5V: 10; 12V: 24; 15V: 30, 24V: 48, 28V: 56, 48V: 96	
Ripple & Noise	mV	3.3V - 5V: 100; 12V - 15V: 150; 24V: 240, 28V: 280, 48V: 400 (1)	
Temperature Coefficient	%/°C	0.02	
Minimum Load	-	No minimum load required	
Overcurrent Protection	%	102 - 150 Constant current style. (PH600A constant current and hiccup)	
Overvoltage Protection	V	Yes, see model selector	
Remote Sense	-	Yes	
Remote On/Off	-	Yes; Low = ON, High = OFF	
Parallel Operation	-	Not possible	
Series Operation	-	Possible, see installation manual	
Environmental			
Operating Temperature	°C	-40 to +100 Base-plate, -40 to +85 Ambient (See derating section)	
Storage Temperature	°C	-40 to +100	
Humidity (non condensing)	%RH	5 - 95 Operating and Non Operating	
Cooling	-	Conduction, convection or forced air (See Installation Manual for heatsink selection)	
Altitude	m	3,000	
Withstand Voltage (For 1 minute)	Vac	Input to Base-plate: 2,500; Input to Output 3,000; Output to Base-plate: 500	
Isolation Resistance	MΩ	>100 at 25°C, 70%RH & 500Vdc	
Vibration	-	Non Operating, 10-55Hz (sweep for 1 min.) Amplitude 0.825mm constant (Max 49 m/s^2) X,Y,Z 1 hour each	
Shock	-	196.1m/s^2	
Other			
Weight (Typ)	g	55	100
Size (WxHxD)	mm	37.2 x 12.7 x 58.3	61.0 x 12.7 x 57.9
Size (WxHxD)	Inches	1.46 x 0.5 x 2.30	2.4 x 0.5 x 2.28
MTBF - Telcordia SR-332 issue 3 (3)	Hours	2 128,235	1,174,511
Warranty	yrs	5 years	

Notes
See website for detailed specifications, test methods and installation manual
(1) PH300A280-48 480mV
(2) Cycle input or remote on/off to reset
(3) PH100A280-48 model, 40°C baseplate, full load, 280Vdc input. PH300A280-24 model, 40°C baseplate, full load, 280Vdc input, ground benign (See full reliability data on website)

chanhvinh.com

Derating Curve (PH50A to PH300A)

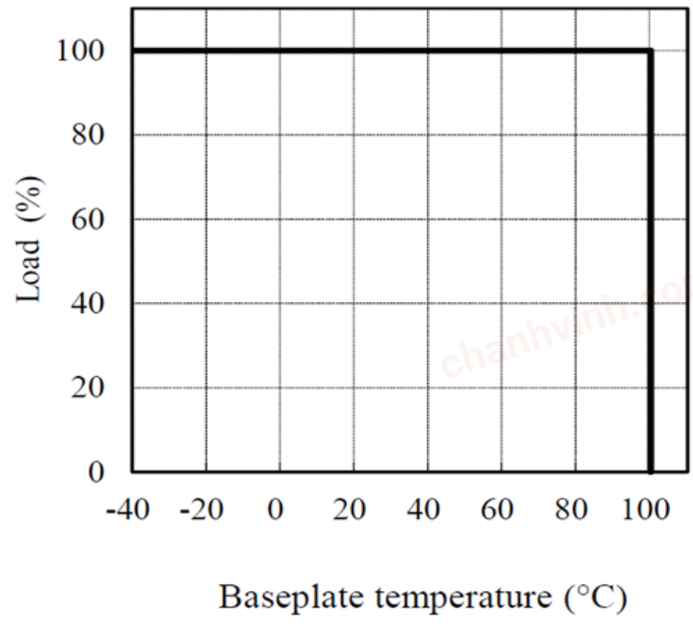

Derating Curve (PH600A)

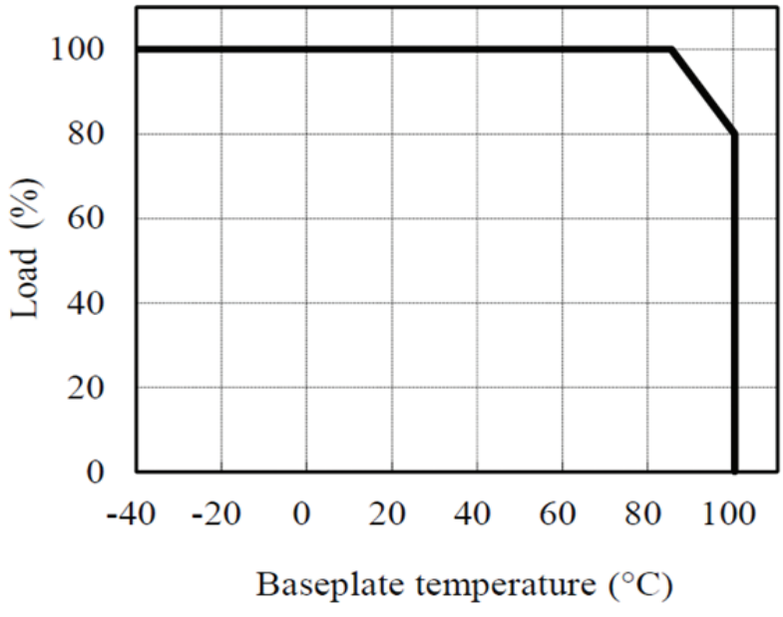

chanhvinh.com

Outline Drawing PH50A to PH150A

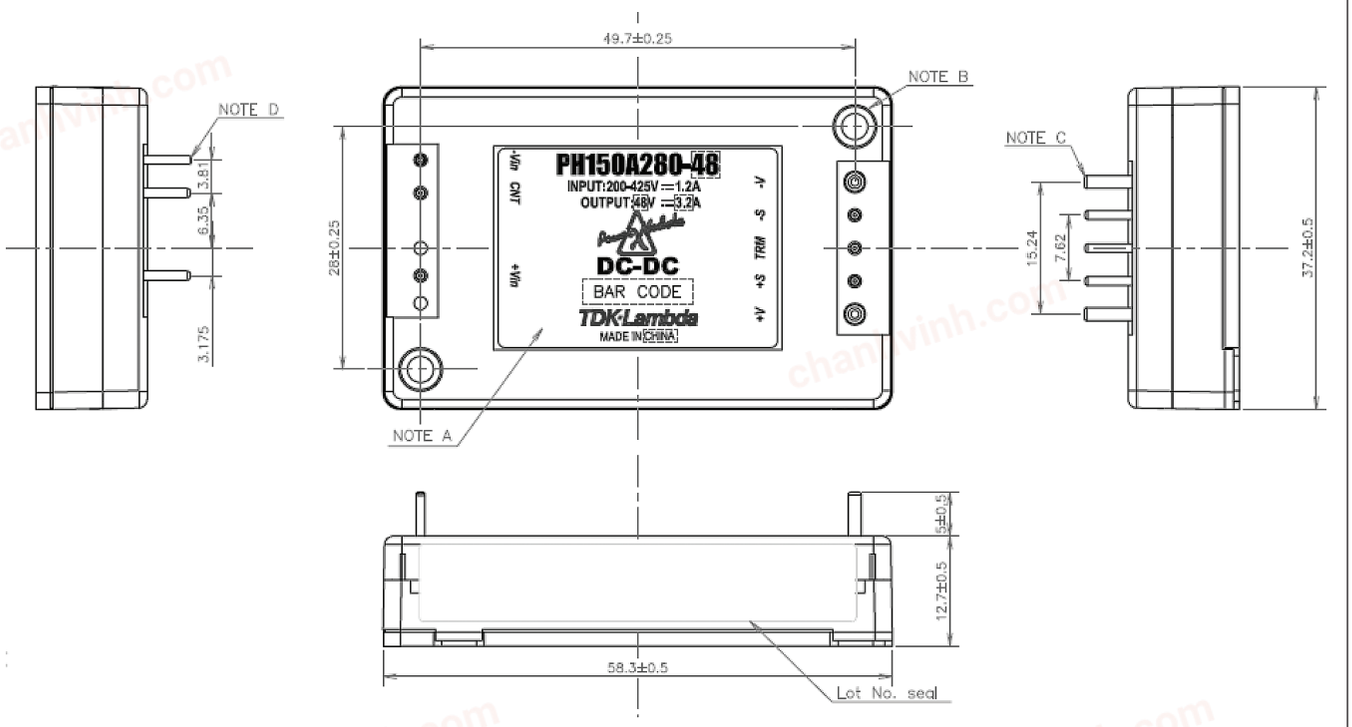

Outline Drawing PH300A to PH600A

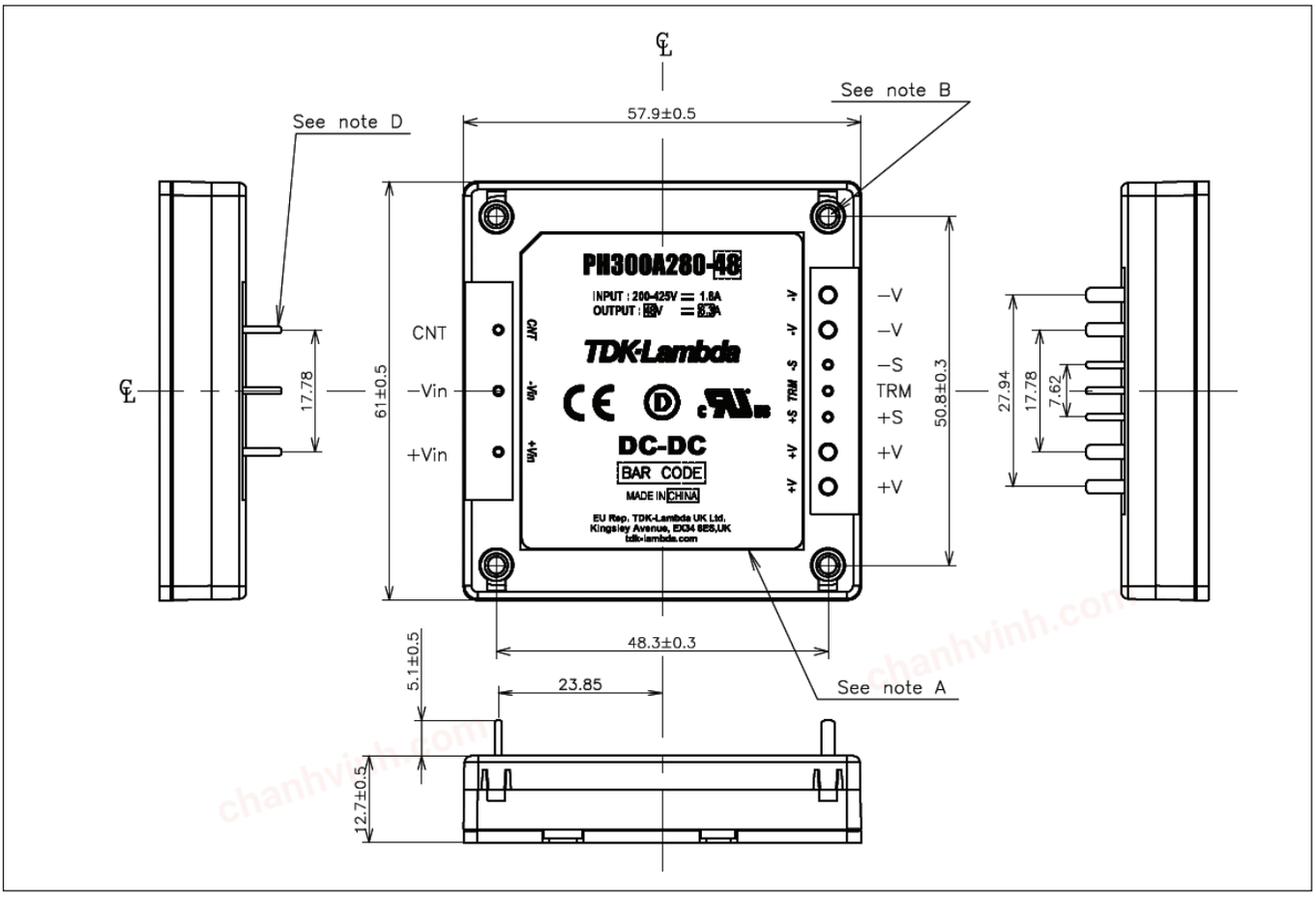

chanhvinh.com

TDK·Lambda

Trusted • Innovative • Reliable



TDK-Lambda France SAS
Tel: +33 1 60 12 71 65
tlf.fr.powersolutions@tdk.com
www.emea.lambda.tdk.com/fr



Italy Sales Office
Tel: +39 02 61 29 38 63
tlf.it.powersolutions@tdk.com
www.emea.lambda.tdk.com/it



Netherlands
tlf.nl.powersolutions@tdk.com
www.emea.lambda.tdk.com/nl



TDK-Lambda Germany GmbH
Tel: +49 7841 666 0
tlg.powersolutions@tdk.com
www.emea.lambda.tdk.com/de



Austria Sales Office
Tel: +43 2256 655 84
tlg.at.powersolutions@tdk.com
www.emea.lambda.tdk.com/at



Switzerland Sales Office
Tel: +41 44 850 53 53
tlg.ch.powersolutions@tdk.com
www.emea.lambda.tdk.com/ch



Nordic Sales Office
Tel: +45 8853 8086
tlg.dk.powersolutions@tdk.com
www.emea.lambda.tdk.com/dk



TDK-Lambda UK Ltd.
Tel: +44 (0) 12 71 85 66 66
tlu.powersolutions@tdk.com
www.emea.lambda.tdk.com/uk



TDK-Lambda Ltd.
Tel: +9 723 902 4333
tli.powersolutions@tdk.com
www.emea.lambda.tdk.com/il-en



TDK-Lambda Americas
Tel: +1 800-LAMBDA-4 or 1-800-526-2324
tla.powersolutions@tdk.com
www.us.lambda.tdk.com



TDK Electronics do Brasil Ltda
Tel: +55 11 3289-9599
sales.br@tdk-electronics.tdk.com
www.tdk-electronics.tdk.com/en



TDK-Lambda Corporation
Tel: +81-3-6778-1113
www.jp.lambda.tdk.com



TDK-Lambda (China) Electronics Co. Ltd.
Tel: +86 21 6485-0777
tlc.powersolutions@tdk.com
www.lambda.tdk.com.cn



TDK-Lambda Singapore Pte Ltd.
Tel: +65 6251 7211
tls.marketing@tdk.com
www.sg.lambda.tdk.com



TDK India Private Limited, Power Supply Division
Tel: +91 80 4039-0660
mathew.philip@tdk.com
www.sg.lambda.tdk.com

chanhvinh.com

For Additional Information, please visit
https://product.tdk.com/en/power/

