chanhvinh.com

TDK·Lambda

PFH500F Series

500W AC-DC Power Modules

https://product.tdk.com/en/power/pfh
www.emea.lambda.tdk.com/pfh500f



Industrial COTS Test LED COMM Broadcast

PMBus

The 4" x 2.4" footprint, high efficiency PFH500 series of AC-DC power modules are used in environments where convection or forced air cooling is not viable. Suitable for use in outdoor enclosures or liquid cooled applications, these pcb mounted power modules accept a wide range AC input and deliver an adjustable, regulated output. High ambient temperatures can be tolerated as the conduction cooled baseplate can withstand -40 to 100°C temperatures. These third generation modules also have a PMBus™ interface with read/write capability for remote monitoring and programming.

Features	Benefits
• Compact 4" x 2.4" x 0.53" Brick Package	• Less Board Area Required
• Metal Case	• Easier Thermal Management and Lower Radiated EMI
• High Power Density, High Efficiency	• Less Waste Heat to Manage and Reduced AC Power Consumption
• 100°C Rated Baseplate Temperature	• Cold plate / Conduction Cooling for Fanless and Rugged Environments
• PMBus™ Interface	• Remote Monitoring and Programming via i^2C
• Optional Droop Mode Load Sharing	• Simplified Paralleling for Higher Power or Redundant Applications

Model Selector

Model	Nominal Output Voltage (V)	Output Adjust Range (V)	Maximum Output Current (A)	Maximum Power (W)(1)	Mounting Inserts	Droop Mode Current Share
PFH500F-12-000-R	12	9.6 - 14.4	42	504	3.3mm Ø Non-threaded	No
PFH500F-12-0D0-R	12	9.6 - 14.4	42	504	3.3mm Ø Non-threaded	Yes
PFH500F-12-100-R	12	9.6 - 14.4	42	504	3mm (M3) Threaded	No
PFH500F-12-1D0-R	12	9.6 - 14.4	42	504	3mm (M3) Threaded	Yes
PFH500F-28-000-R	28	22.4 - 33.6	18	504	3.3mm Ø Non-threaded	No
PFH500F-28-0D0-R	28	22.4 - 33.6	18	504	3.3mm Ø Non-threaded	Yes
PFH500F-28-100-R	28	22.4 - 33.6	18	504	3mm (M3) Threaded	No
PFH500F-28-1D0-R	28	22.4 - 33.6	18	504	3mm (M3) Threaded	Yes
PFH500F-48-000-R	48	38.4 - 52.8	10.5	504	3.3mm Ø Non-threaded	No
PFH500F-48-0D0-R	48	38.4 - 52.8	10.5	504	3.3mm Ø Non-threaded	Yes
PFH500F-48-100-R	48	38.4 - 52.8	10.5	504	3mm (M3) Threaded	No
PFH500F-48-1D0-R	48	38.4 - 52.8	10.5	504	3mm (M3) Threaded	Yes

PFH500F	-	28	-	1	D	0	-	R

- 28: Output voltage 12, 28, 48V
- 1: 0 Non-threaded inserts; 1 M3 threaded inserts
- D: 0 No droop mode current share; D Droop mode current share
- R: RoHS Compliant

Last Time Buy April 30, 2026

chanhvinh.com

Related Products

	Part Number	Description
AC-DC Power Module	PFH500A-28	85-135 Vac / 375-420 Hz Input, 28Vdc @ 500W Module
Heatsink	HS00110	2.4" x 4" x 1.5" aluminum heatsink with cylindrical pin fins with integrated thermal pad
Inrush Resistor	AR00719	22Ω 1.6W Thermal fuse resistor
EMI Common Mode Choke	ARA00499	6.3 mH Common Mode Inductor, Through Hole
Evaluation Kits	PFH05W12-100-EVK-S1	Evaluation board with a PFH500F-12-100-R module and heatsink fitted
	PFH05W12-1D0-EVK-S1	Evaluation board with a PFH500F-12-1D0-R module and heatsink fitted
	PFH05W28-100-EVK-S1	Evaluation board with a PFH500F-28-100-R module and heatsink fitted
	PFH05W28-1D0-EVK-S1	Evaluation board with a PFH500F-28-1D0-R module and heatsink fitted
	PFH05W48-100-EVK-S1	Evaluation board with a PFH500F-48-100-R module and heatsink fitted
	PFH05W48-1D0-EVK-S1	Evaluation board with a PFH500F-48-1D0-R module and heatsink fitted

Specifications

Model		PFH500F-12	PFH500F-28	PFH500F-48
Input				
Input Voltage Range	Vac	85 - 265 (low line derating may apply)		
Input Frequency	Hz	47 - 63		
Input Current (115/230 Vac)	A	5.0 / 2.5		
Inrush Current	A	9 / 18 (20A peak)		
Leakage Current	-	Will depend on the value of the external Y capacitors (refer to evaluation data)		
Power Factor (230Vac, 80% load)	-	>0.95		
Harmonic Compliance	-	Meets IEC61000-3-2		
No Load Power Consumption		See evaluation report on website		
Hold-up Time	ms	Will depend on the value of the external bulk capacitance (refer to evaluation data		
Efficiency (typ 115/230Vac, 100% Load)	%	90 / 92	90 / 92	89 / 91
Conducted & Radiated EMI	-	EN55032 Class B (See Instruction Manual for conditions)		
Immunity	-	Meets IEC61000-4-2, -3, -4, -5, -6, 8, -11, -12, -14 (refer to immunity report)		
Insulation Class	-	Class II		
Safety Certifications and Markings	-	IEC/UL/CSA/EN62368-1, 60950-1, CE Mark and UKCA Mark		
Output				
Output Voltage Setpoint Tolerance	%	±2% (115Vac, Io = 0%)		
Line Regulation (50% Load)	%	0.3	0.15	0.1
Load Regulation (115/230Vac) (2)	%	0.125 (10% to 100% load)	0.1	0.1
Droop Rate (-xDx-R suffix)	mV/A	25	50	100
Ripple & Noise	mV	150	400	400
Minimum Load	-	No minimum load required		
Overcurrent Protection (hiccup)	A	47.5	21.5	12.5
Overvoltage Protection (max)	V	15.7	35.5	55
Overtemperature Protection	°C	Input line / output load dependent (Refer to Instruction Manual)		
Remote Sense	-	Yes		
Remote ON/OFF	-	Negative Logic; Low (< 1V) = Module On (300 µA, 3.3V max)		
Power Good	-	Active Low (< 1 Vdc @ 150 mA, 50V max)		
Auxiliary Output	Vdc	10 - 14 @ 200 mA max.		
External Load Capacitance (CC Mode)	uF	3,000 - 10,000	470 - 6,000	470 - 4,000
External Load Capacitance (CR Mode)	uF	3,000 - 45,000	470 - 20,000	470 - 6,000
Parallel Operation	-	Yes. Droop mode current share models and main output voltage only (refer to suffix xDx-R)		

Last Time Buy April 30, 2026

chanhvinh.com

Specifications

Model		PFH500F-12	PFH500F-28	PFH500F-48
Environmental				
Operating Baseplate Temperature	°C	-40 - 100 (see derating curves)		
Storage Temperature	°C	-55 to 125		
Humidity (non condensing)	%RH	20-95 (Operating) / 10-95 (Non Operating)		
Cooling	-	Conduction		
Altitude	m	2,000 (contact factory for higher altitudes)		
Withstand Voltage	Vac	Input to Output: 3.0kVac; Input to Case: 2.5kVac; Output to Case: 1.5kVdc		
Vibration	-	MIL-STD-810G 514.6 Cat 4, 10		
Shock	-	MIL-STD-810G 516.6 Procedure I		
Other				
Communications Interface		i2C (2 Address pins, CLK, Data, Alert) / PMBus Protocol (Refer to PFH500 PMBus Specifications and GUI)		
Weight	g	225		
Size (LxWxH)	mm	101.6 x 61.0 x 13.3		
Size (LxWxH)	in	4.00 x 2.40 x 0.53		
MTBF - Telcordia SR-332	-	> 2.2 MHrs, 100% Load, 230 Vac, Ta = 40 ˚C		
Warranty	yrs	3		

PMBus Monitoring and Programming Functions

Function	PMBus Commands
Output Voltage Data Format	Read only
Output Voltage Programming	Read / Write
Output Droop Rate (Current share)	Read only
Overvoltage Protection Set Point	Read / Write
Overtemperature Protection Fault Limit	Read / Write
Overcurrent Protection Set Point	Read / Write
Output Undervoltage Fault Trip Limit	Read / Write
Internal Temperature Monitor 1 (Output)	Read only
Internal Temperature Monitor 2 (Output)	Read only
Internal Temperature Monitor 3 (Input)	Read only
Internal Temperature Monitor 3 (Input)	Read only
High Voltage Bus Monitor	Read only
Output Voltage Monitor	Read only
Output Current Monitor	Read only
DC-DC Switching Frequency Monitor	Read only
Input Voltage Monitor	Read only
Input Current Monitor	Read only
Power Supply Status	Read only
Power Supply Fault Status	Read only
SMBAlert Mask	Read / Write
Remote On/Off	Write only
Manufacturing Information	Read only
Restore Data Functions	Read / Write

Notes:
See website for detailed specifications, evaluation data and instruction manual.
Specifications are typical based on nominal inputs, 25°C ambient temperature unless otherwise stated.
External components required. Refer to the product Instruction Manual for more detailed information.
(1) Total output power including the auxiliary output
(2) Excludes droop mode current share models

Last Time Buy April 30, 2026

chanhvinh.com

PFH500F Basic Connection Diagram

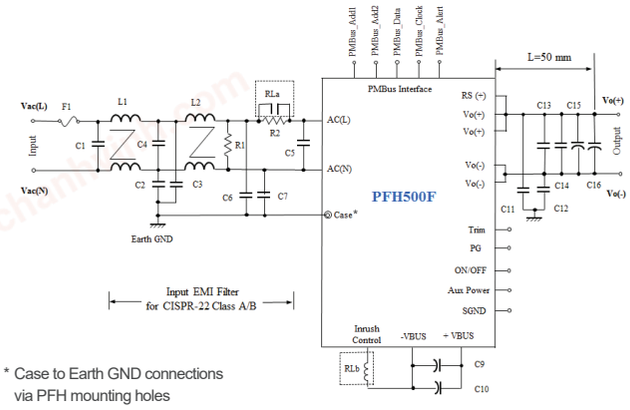

* Case to Earth GND connections via PFH mounting holes

PFH500F-12 Derating Curve

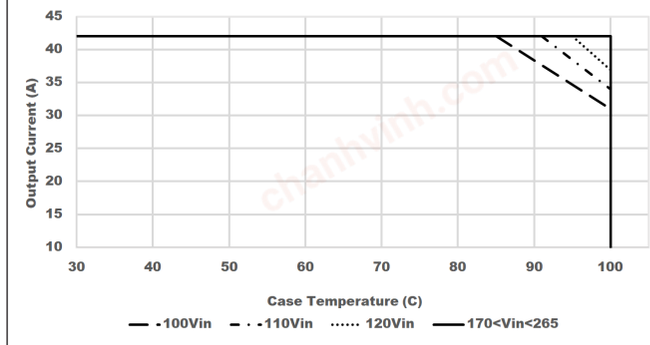

PFH500F-28 Derating Curve

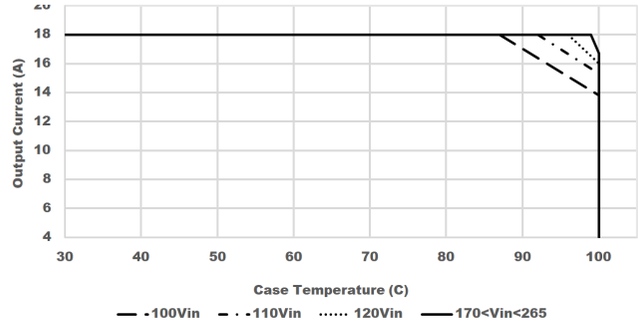

PFH500F-48 Derating Curve

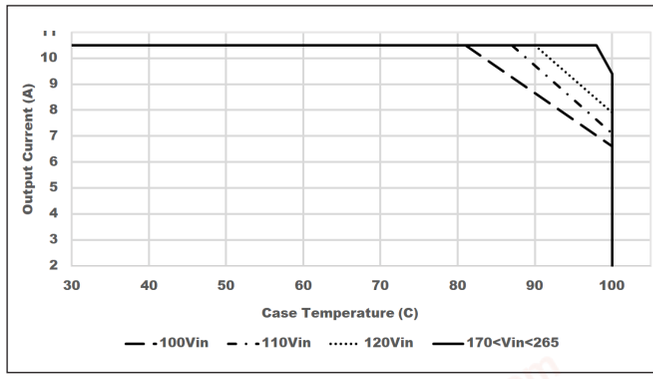

Mechanical Specification

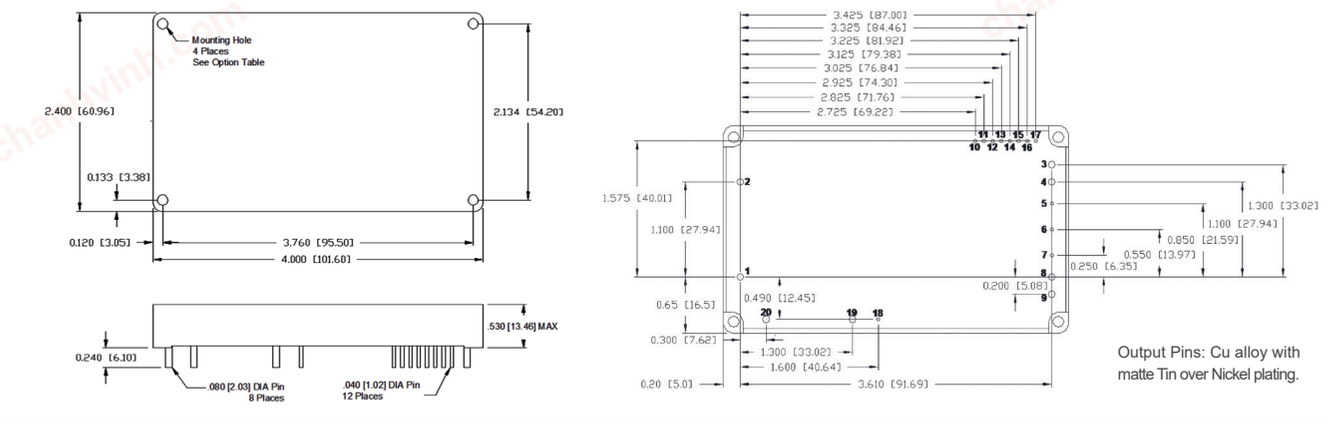

Pinout

PIN	Function	PIN	Function	PIN	Function	PIN	Function
1	AC Input (Line) or AC (L)	7	Remote Sense (+) or RS (+)	13	PMBus Clock	19	- Boost Voltage Bus or - VBUS
2	AC Input (Neutral) or AC (N)	8	Vout (+)	14	PMBus Data	20	+ Boost Voltage Bus or + VBUS
3	Vout (-)	9	Vout (+)	15	PMBus Alert		
4	VOUT (-)	10	Power Good or PG	16	PMBus Address 2		
5	Remote ON/OFF	11	Secondary Signal GND or SGND	17	PMBus Address 1		
6	TRIM	12	Aux Power Supply or Aux Power	18	Inrush Control or Inrush CTL		

Last Time Buy April 30, 2026

chanhvinh.com

TDK-Lambda France SAS
Tel: +33 1 60 12 71 65
tlf.fr-powersolutions@tdk.com
www.emea.lambda.tdk.com/fr

Italy Sales Office
Tel +39 02 61 29 38 63
tlf.it-powersolutions@tdk.com
www.emea.lambda.tdk.com/it

Netherlands
tlf.nl-powersolutions@tdk.com
www.emea.lambda.tdk.com/nl

TDK-Lambda Europe GmbH
Tel: +49 7841 666 0
tlg.powersolutions@tdk.com
www.emea.lambda.tdk.com/de

Austria Sales Office
Tel: +43 2256 655 84
tlg.at-powersolutions@tdk.com
www.emea.lambda.tdk.com/at

Switzerland Sales Office
Tel: +41 44 850 53 53
tlg.ch-powersolutions@tdk.com
www.emea.lambda.tdk.com/ch

TDK-Lambda Europe GmbH
Tel: Tel. +45 3222 8086
tlg.dk-powersolutions@tdk.com
www.emea.lambda.tdk.com/dk

TDK-Lambda UK Ltd.
Tel: +44 (0) 12 71 85 66 66
tlu.powersolutions@tdk.com
www.emea.lambda.tdk.com/uk

TDK-Lambda Ltd.
Tel: +9 723 902 4333
tli.powersolutions@tdk.com
www.emea.lambda.tdk.com/il-en

TDK-Lambda Americas
Tel: +1 800-LAMBDA-4 or 1-800-526-2324
tla.powersolutions@tdk.com
www.us.lambda.tdk.com

TDK Electronics do Brasil Ltda
Tel: +55 11 3289-9599
sales.br@tdk-electronics.tdk.com
www.tdk-electronics.tdk.com/en

TDK-Lambda Corporation
Tel: +81-3-6778-1113
www.jp.lambda.tdk.com

TDK-Lambda (China) Electronics Co. Ltd.
Tel: +86 21 6485-0777
tlc.powersolutions@tdk.com
www.lambda.tdk.com.cn

TDK-Lambda Singapore Pte Ltd.
Tel: +65 6251 7211
tls.marketing@tdk.com
www.sg.lambda.tdk.com

TDK India Private Limited, Power Supply Division
Tel: +91 80 4039-0660
mathew.philip@tdk.com
www.sg.lambda.tdk.com

Last Time Buy April 30, 2026

For Additional Information, please visit
https://product.tdk.com/en/power/