chanhvinh.com

TDK·Lambda

PF1500B-360 Series

1008 to 1512W Power Factor Correction Module

https://product.tdk.com/en/power/pf-b
www.emea.lambda.tdk.com/pf



Industrial Test Semi-Fab

The full brick size PF1500B-360 converts AC to a regulated 360Vdc for use in distributed power systems utilizing isolated high voltage DC-DC converters, or loads requiring a high voltage source. Rated at 1512W for an input of 170 to 265V and 1008W from 85 to 265V, the module has a 0.98 power factor and an efficiency of up to 96.5%. The baseplate can be conduction cooled via a cold-plate or using an optional heatsink and external airflow. Modules can be connected in parallel for additional power. The remote on/off function can be used to enable DC-DC converters via the ENA (DC good) signal. An auxiliary output and inverter good signal are also provided for control and monitoring.

Features	Benefits
• Suitable For Developing Custom Supplies	• Module Solution Reduces Risk, Time and Cost
• Up to 96.5% Efficient	• Less Waste Heat to Manage and Reduced AC Power Consumption
• Compact Full Brick Package (116.8 x 61 x 12.7mm)	• Utilizes Less Space
• Up to 100°C Rated Baseplate Temperature	• Suitable for Rugged Environments
• Conduction Cooled Via Baseplate	• For Use in Convection Cooled or Sealed Enclosures

Model Selector

Model	Output Voltage (V)	Maximum Current (A) 85-265Vac Input	Maximum Power (W) 85-265Vac Input	Maximum Current (A) 170-265Vac Input	Maximum Power (W) 170-265Vac Input
PF1500B-360	360	2.8	1008	4.2	1512

Options

Blank	M3 Threaded mounting hole
/T	Non threaded mounting holes

Related Products

Type	Part Number(s)	Size (mm) / Description
Heatsink	HAF-10L	116.8 x 25.4 x 61
Heatsink	HAF-15L	116.8 x 38.1 x 61
Heatsink	HAF-15T	116.8 x 38.1 x 61
DC-DC Converters	PH-A series	50 to 1200W, 200-425V input
Thermal Fuse Resistor for Inrush Circuit	DFN51120	5.1R 5W (For TRF1 and TRF2)

chanhvinh.com

Specifications

Model		PF1500B-360
Input		
Input Voltage Range (Operating)	Vac	85 - 265V
Nominal Input Voltage Range	Vac	100 - 240 (Note: Safety certified for 90 - 264Vac only)
Input Frequency	Hz	47 - 63
Input Current (100 / 230Vac)	A	10.6 / 6.8
Inrush Current at 230Vac (typ) (Cold Start)	A	25
Leakage Current	-	External circuitry - See Instruction Manual
Power Factor	-	>0.98
Harmonic Compliance	-	Meets IEC61000-3-2
Hold Up Time	-	External circuitry - See Instruction Manual
Efficiency	%	100Vac: 93.5; 115Vac: 94, 230Vac: 96.5
Conducted & Radiated EMI	-	External circuitry - See Evaluation Data on website for EN55032 class A/B circuitry
Immunity	-	See website for Immunity report
Safety Certifications and Markings	-	IEC/UL/CSA/EN62368-1, CE Mark and UKCA Mark
Output		
Output Voltage Tolerance	%	±2
Output Voltage Adjustment	-	Fixed output voltage
Switching Frequency	kHz	127
Line Regulation	V	5
Load Regulation	V	10
External Load Capacitance	uF	470 to 2,700 (See instruction manual)
Ripple & Noise (Peak to Peak)	V	20
Temperature Coefficient	%/°C	0.02
Minimum Load	-	No minimum load required
Overcurrent Protection	-	External fuse (See instruction manual)
Overvoltage Protection	V	390 - 425
Overtemperature Protection	°C	105 - 130
Remote Sense	-	No
Remote On/Off	-	Closed contact = output “on”
Power ON (ENA Signal)	-	Open collector, low when output voltage is >350V
IOG (Inverter Operation Good)	-	Opto-isolated signal, low when inverter is good
Auxiliary Voltage	V / mA	10 - 16V 10mA
Indicators	-	None
Parallel Operation	-	Up to 3 modules
Environmental		
Operating Temperature	°C	-40 to +100 (Baseplate), -40 to +85 (Ambient)
Storage Temperature	°C	-40 to +100
Humidity (non condensing)	%RH	20 - 95 Operating, 10 - 95 Storage
Cooling	-	Conduction
Altitude	m	3,000
Withstand Voltage (For 1 minute)	Vac	Terminal pins to baseplate 2,500. (Input is not isolated from the output)
Isolation Resistance	MΩ	>100 at 25°C, 70%RH & 500Vdc
Vibration (Non-operating)	-	10-55Hz (Sweep for 1min.) Amplitude 0.825mm constant (maximum 49m/s^2) X, Y, Z 1 hour each
Shock (In Package)	-	Less than 196.1m/s^2
Other		
Weight (Typ)	g	200
Size (LxWxH)	mm	116.8 x 61 x 12.7
Size (LxWxH)	Inches	4.6 x 2.4 x 0.5
MTBF - Telcordia SR-332 issue 5*	Hours	866,521
Warranty	Years	5

Notes

See website for detailed specifications, test methods and installation manual

*80°C baseplate, full load, 230Vac input

chanhvinh.com

PF1500B-360 Basic connection

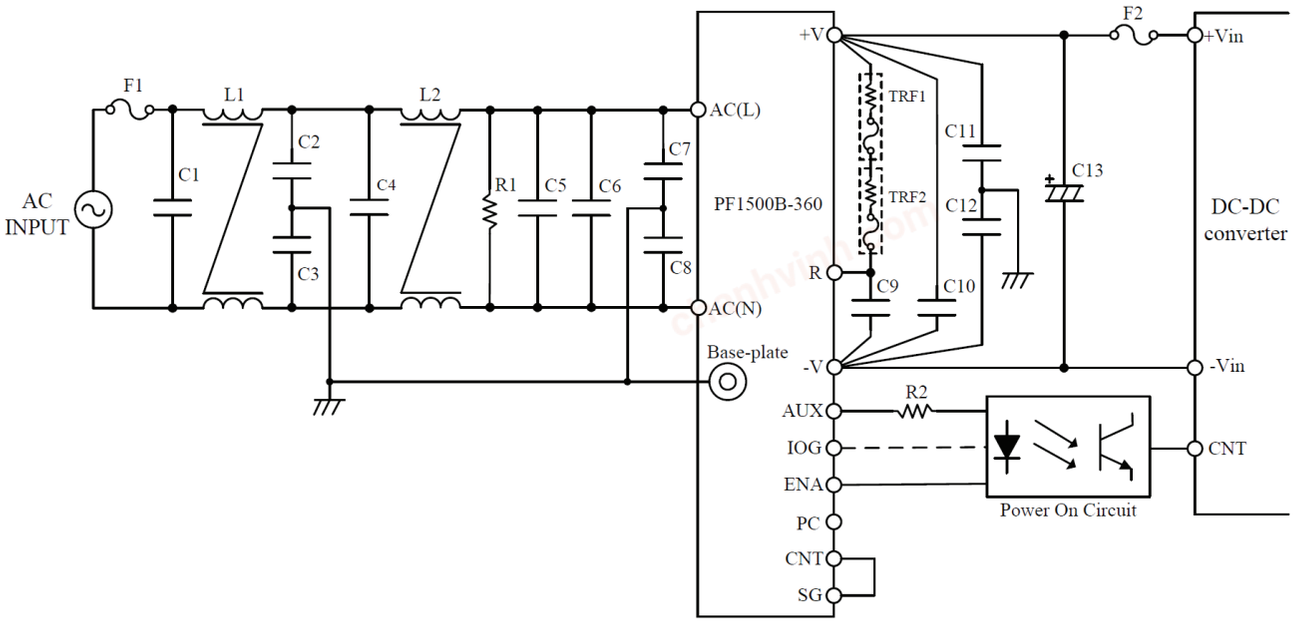

Derating Curve Input Voltage vs. Output Power

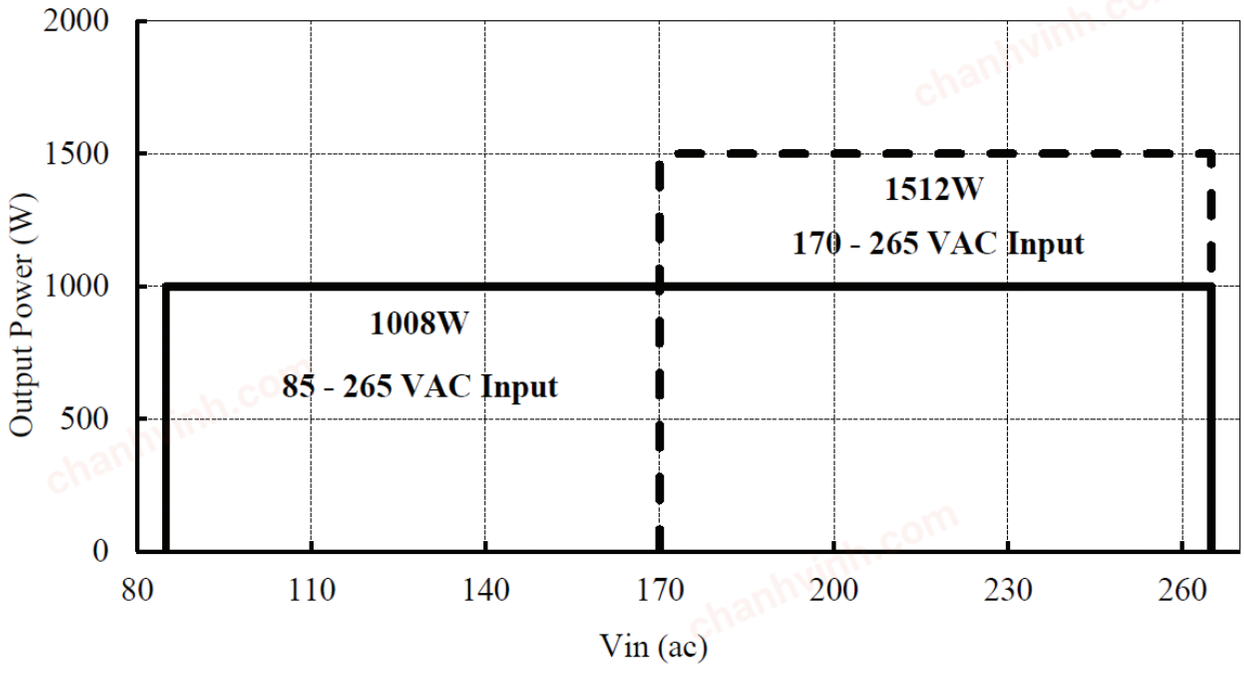

chanhvinh.com

Outline Drawing & Pin Out

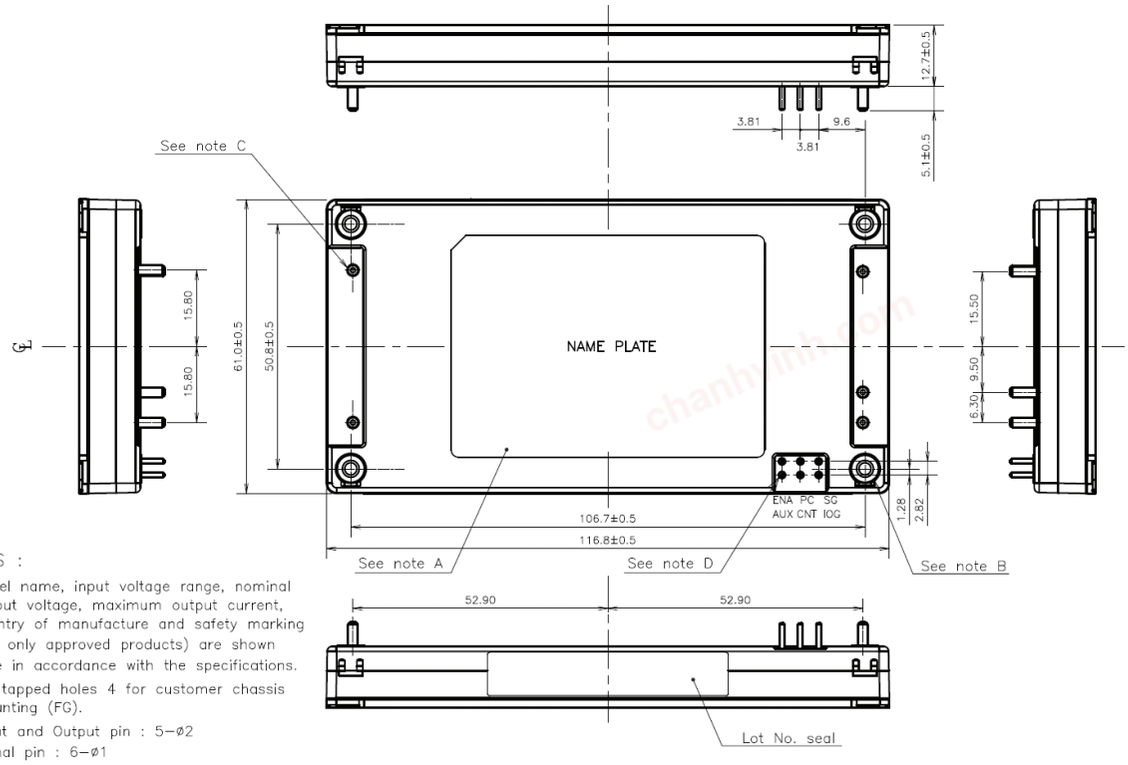

NOTES :

A: Model name, input voltage range, nominal output voltage, maximum output current, country of manufacture and safety marking (for only approved products) are shown here in accordance with the specifications.

B: M3 tapped holes 4 for customer chassis mounting (FG).

C: Input and Output pin : 5−ø2

D: Signal pin : 6−ø1

E: Unless otherwise specified dimensional tolerance : ±0.3mm

Block Diagram

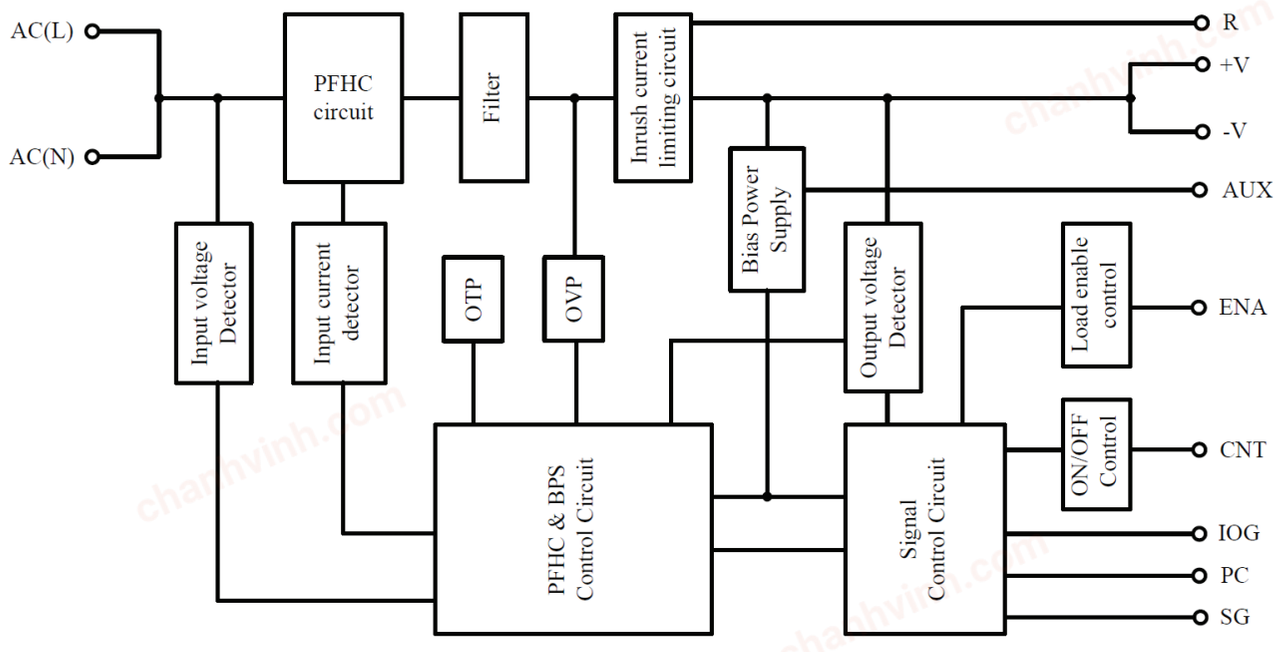

Switching Frequency(fixed) : 127kHz ±10kHz

chanhvinh.com

TDK·Lambda

Trusted • Innovative • Reliable



TDK-Lambda France SAS
Tel: +33 1 60 12 71 65
tlf.fr.powersolutions@tdk.com
www.emea.lambda.tdk.com/fr



Italy Sales Office
Tel: +39 02 61 29 38 63
tlf.it.powersolutions@tdk.com
www.emea.lambda.tdk.com/it



Netherlands
tlf.nl.powersolutions@tdk.com
www.emea.lambda.tdk.com/nl



TDK-Lambda Germany GmbH
Tel: +49 7841 666 0
tlg.powersolutions@tdk.com
www.emea.lambda.tdk.com/de



Austria Sales Office
Tel: +43 2256 655 84
tlg.at.powersolutions@tdk.com
www.emea.lambda.tdk.com/at



Switzerland Sales Office
Tel: +41 44 850 53 53
tlg.ch.powersolutions@tdk.com
www.emea.lambda.tdk.com/ch



Nordic Sales Office
Tel: +45 8853 8086
tlg.dk.powersolutions@tdk.com
www.emea.lambda.tdk.com/dk



TDK-Lambda UK Ltd.
Tel: +44 (0) 12 71 85 66 66
tlu.powersolutions@tdk.com
www.emea.lambda.tdk.com/uk



TDK-Lambda Ltd.
Tel: +9 723 902 4333
tli.powersolutions@tdk.com
www.emea.lambda.tdk.com/il-en



TDK-Lambda Americas
Tel: +1 800-LAMBDA-4 or 1-800-526-2324
tla.powersolutions@tdk.com
www.us.lambda.tdk.com



TDK Electronics do Brasil Ltda
Tel: +55 11 3289-9599
sales.br@tdk-electronics.tdk.com
www.tdk-electronics.tdk.com/en



TDK-Lambda Corporation
Tel: +81-3-6778-1113
www.jp.lambda.tdk.com



TDK-Lambda (China) Electronics Co. Ltd.
Tel: +86 21 6485-0777
tlc.powersolutions@tdk.com
www.lambda.tdk.com.cn



TDK-Lambda Singapore Pte Ltd.
Tel: +65 6251 7211
tls.marketing@tdk.com
www.sg.lambda.tdk.com



TDK India Private Limited, Power Supply Division
Tel: +91 80 4039-0660
mathew.philip@tdk.com
www.sg.lambda.tdk.com

For Additional Information, please visit
https://product.tdk.com/en/power/