chanhvinh.com

TDK·Lambda NV-Power NV-175

www.uk.tdk-lambda.com/nv

Medical Industrial Test Broadcast Comms Renewable

175/180/200W Configurable ac/dc power supply.

Features	Benefits
• High Efficiency	Minimises heat in system
• Low Profile	Fits 1U Applications
• High power density	Reduces space requirement
• Temerature controlled fan option	Reduces system noise
• 3 Year Warranty	Low cost of ownership



Input

Input Voltage	90-264Vac	Input Frequency	45 - 63Hz (440Hz with reduced PFC - consult sales office)
Input Harmonics	EN61000-3-2 compliant	Power Factor	0.97 typical
Input Fuse	Timelag (not user accessible)	Inrush Current	<40A at 25°C and 230Vac (cold start)
Earth Leakage Current	123µA at 120Vac (60Hz), 257µA max at 240Vac (60Hz) Worst case leakage current is less than 300µA at 264Vac, 63Hz (normal condition, 500µA Single Fault Condition)		

Available Outputs

Channel 1		Adjustment Range	Channel 2[1]		Adjustment Range	Channel 3[3]		Adjustment Range	Channel 4[4]		Adjustment Range
5	5V / 25A[2]	5 - 5.5V	1	1.8V / 15A	0.9 - 2.5V	T	12V / 5A	12 - 15V	T	-12V / 1A	Fixed
			2	2.7V / 15A	2.5 - 3.3V	F	15V / 5A	12 - 15V	F	-15V / 1A	Fixed
			3	3.3V / 15A	2.5 - 3.3V	G	24V / 2.5A	18 - 24V	3H	-3.3V / 2A[9]	Fixed
			0	Omit		0	Omit		5H	-5V / 2A[9]	Fixed
T	12V / 15A	12 - 15V[5]	5	5V / 10A[10]	3.3 - 5.5V				TH	-12V / 2A[9]	Fixed
F	15V / 12A	12 - 15V[6]	0	Omit					FH	-15V / 2A[9]	Fixed
G	24V / 7.5A	24 - 28V[7]	5	5V / 8A[8]	3.3 - 5.5V				0H	Fan supply only	
			0	Omit					0	Omit	

1. 1.8V, 2.7V, 3.3V channel 2 only available with 5V Channel 1
   5V/10A channel 2 only available with 12V or 15V Channel 1
   5V/8A channel 2 only available with 24V Channel 1.
2. Maximum combined output current from Ch1 & Ch2 = 25A
   Models with 5V channel 1 are limited to 175W output power
3. Follow letters in red by 'Y' for negative output channel 3.
4. Follow letters in red by 'P' for positive output channel 4.
5. 12 - 12.5V if 24V channel 3 fitted.
6. 14.5 - 15V if 24V channel 3 fitted
7. 24 - 24.5V if 5V channel 2 fitted
   24 - 26V if 24V channel 3 fitted.
8. 7A max with '-F' or '-I' option.
9. 1.5A max with '-F' or '-I'option.
10. 9A max with '-F' or '-I'option.

Other output options are available, please contact sales office with your requirements

Isolation

Input to Output	2 x MOOPs (3rd edition 60601) 4.3kVdc	Medical reinforced (2 x MOPPs) version available, contact sales office for details.
Input to Earth	1.5kVac, 2.3kVdc	
Output to Earth	200Vdc	

chanhvinh.com

TDK·Lambda

How To Create A Product Description

Confirm availability of created product with TDK-Lambda

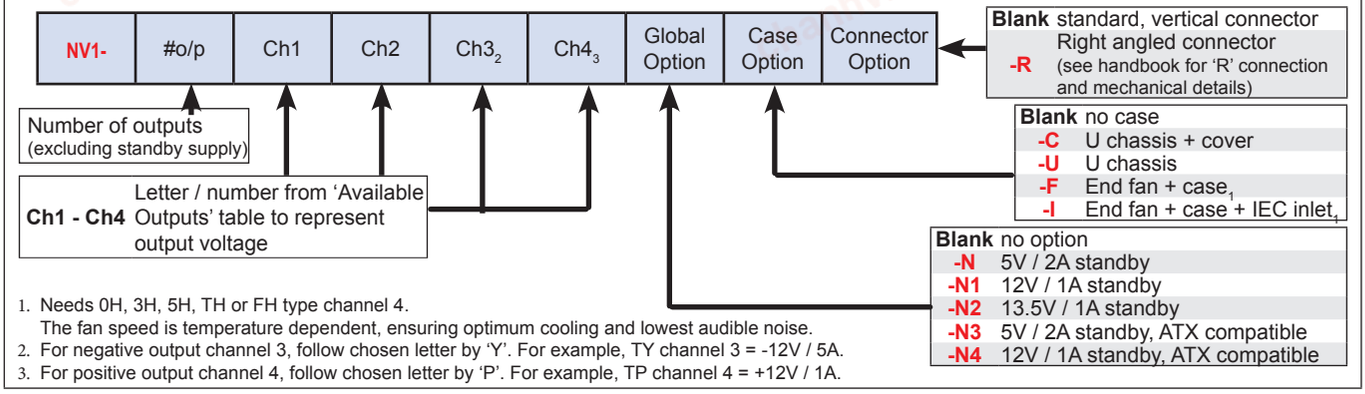

1. Needs 0H, 3H, 5H, TH or FH type channel 4.
   The fan speed is temperature dependent, ensuring optimum cooling and lowest audible noise.
2. For negative output channel 3, follow chosen letter by 'Y'. For example, TY channel 3 = -12V / 5A.
3. For positive output channel 4, follow chosen letter by 'P'. For example, TP channel 4 = +12V / 1A.

Output Specification

Turn on time	1.5s max	at 90Vac and 100% rated output power
Efficiency	up to 90%	configuration dependent
Hold up	16ms min	at 90Vac
Ripple and Noise	<1%	(or 50mV if higher) pk-pk, using EIAJ test method & 20MHz bandwidth
Voltage Accuracy	±1%	±4% for Channel 4 with 'T' or 'F' type outputs, +4/-3% for all other channel 4.
Remote Sense	Yes	Channels 1 & 2. Max 0.5V total line drop
Minimum Load	No	on any output
Total Regulation	1%	Including Line (for 90-264Vac input change), Load (for 0-100% load change) and Cross (for 0-100% load change on any other output) regulation.
Transient Response	<4%	of set voltage for 50% load change (in 50µs within the range 25-100% load)
Recovery	500µs	for recovery to 1% of set voltage
Over Voltage Protection	Yes	See Application Notes for details
Short Circuit Protection	Yes	
Over Temperature Protection	Yes	
Peak Output Power	200W	Single output units with 12V, 15V or 24V (T, F or G). Average output power must not exceed 180W over any 5 minute period
Ch1 Good Signal	Yes	Provides a Logic 'Low' signal after Channel 1 output is within 90% (±5%) of nominal

QUICK SELECTOR - example configurations

Model	Ch1	Ch1	Ch3	Ch4	Ch5	Global Option
NV1-1T000	12V / 15A	-	-	-	-	No
NV1-1G000	24V / 7.5A	-	-	-	-	No
NV1-453TT	5V / 25A	3.3V / 15A	12V / 5A	-12V / 1A	-	No
NV1-453TT-N3	5V / 25A	3.3V / 15A	12V / 5A	-12V / 1A	5V / 2A	ATX (-N3)
NV1-453FF	5V / 25A	3.3V / 15A	15V / 5A	-15V / 1A	-	No
NV1-453FF-N3	5V / 25A	3.3V / 15A	15V / 5A	-15V / 1A	5V / 2A	ATX (-N3)
NV1-4G5TT	24V / 7.5A	5V / 8A	12V / 5A	-12V / 1A	-	No
NV1-4G5TT-N3	24V / 7.5A	5V / 8A	12V / 5A	-12V / 1A	5V / 2A	ATX (-N3)
NV1-4G5FF	24V / 7.5A	5V / 8A	15V / 5A	-15V / 1A	-	No
NV1-4G5FF-N3	24V / 7.5A	5V / 8A	15V / 5A	-15V / 1A	5V / 2A	ATX (-N3)

Additional variants available 'Built to Order' - see 'How to create a product description'

chanhvinh.com

TDK·Lambda

Global Signals (-N, -N1 and -N2 option models)	
Remote on/off	TTL logic level high inhibits all outputs (except Standby)
Power Good	Open collector output (referenced to PSU 0V). Turns on to indicate ac supply is good and output 1 is within regulation.
Standby Supply	Isolated supply, not affected by remote on/off -N option = 5V / 2A (2.5A peak) -N1 Option = 12V / 1A -N2 Option = 13.5V / 1A

Global Signals (-N3 and -N4 option models)	
ATX Remote on/off	TTL logic level high or open circuit inhibits all outputs (except Standby)
ATX Power Good	Logic high indicates ac supply is good and output 1 is within regulation.
Standby Supply	Common 0V with power supply. Not affected by ATX remote on/off -N3 option = 5V / 2A -N4 Option = 12V / 1A

Immunity EN61000-6-2:2005, EN60601-1-2:2001				Criteria
Electrostatic Discharge	EN61000-4-2	Level 4	Air discharge 15kV, Contact discharge 8kV. Not applicable to open frame units	A
Electromagnetic Field	EN61000-4-3	Level 3	12V/m	A
Fast / Burst Transient	EN61000-4-4	Level 4	ac input tested to 4.4kV dc output tested to 2.2kV	A
Surge Immunity	EN61000-4-5	Level 3	Common mode - 2.2kV, Differential - 1.1kV	A
Conducted RF Immunity	EN61000-4-6	Level 3	12V	A
Power Frequency Magnetic Field	EN61000-4-8	Level 4	30A/m	A
Voltage Dips, Variations, Interruptions	EN61000-4-11	Class 3	Criteria B for 5 sec interruption	A

Emissions EN61000-6-3:2007, EN60601-1-2:2001		
Radiated Electric Field	EN55011, EN55022	(as per CISPR.11/22) Class B, FCC47 part 15 subpart B see application note for details. Additional filtering is required for IEC inlet version
Conducted Emissions	EN55011, EN55022	(as per CISPR.11/22) Class B, FCC47 part 15 subpart B
Conducted Harmonics	EN61000-3-2	Class A
Flicker	EN61000-3-3	Compliant - d_{max} only

Environment	
Temperature	0°C to 50°C operational, -40°C to 70°C storage (max 12 months). Full load, with either '-F' option fitted or 2m/s air blown from input to output (approximately 10CFM)
Derating	50°C to 70°C derate each output by 2.5% per °C
Low Temp Startup	-20°C
Humidity	5 - 95% RH non condensing
Shock	±3 x 30g shocks in each plane, total 18 shocks 30g shock = 11ms (+/-0.5msec), half sine Conforms to EN60068-2-27, EN60068-2-47, IEC68-2-27, IEC68-2-47, JIS C0041-1987. Conforms to MIL-STD-810E/F, Method 516.5, Pro I, IV, VI
Vibration	Single axis 10 - 500 Hz at 2g (sweep and endurance at resonance) in all 3 planes Conforms to EN60068-2-6, IEC68-2-6 Conforms to MIL-STD-810E, Method 514.4, Pro I, Cat 1,9
Altitude	3000 metres operational
Pollution	Degree 2, Material group IIIb

Safety Approvals	Notes
IEC/EN 60950-1, UL60950-1 / CSA 22.2 No 60950-1	File E135494
IEC/EN 60601-1, UL/CSA 60601-1, ANSI/AAMI ES60601-1 CAN/CSA-C22.2 No 60601-1-08	File E349607
IEC/EN61010	File E331788
CE Mark (EN60950-1)	LV Directive 2006/95/EC
CB certificate and Report available on request	*Please check with technical sales for status of approvals*

chanhvinh.com

Outline & Connection Drawings

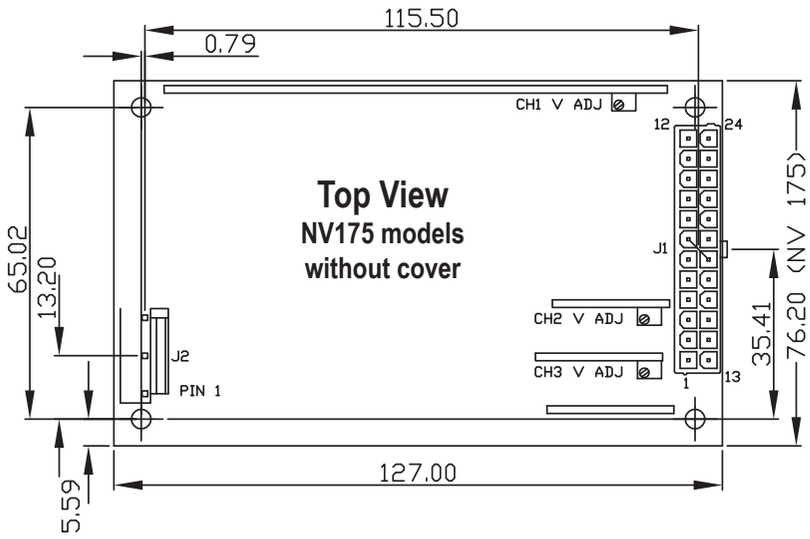

J2

PIN	FUNCTION
1	EARTH
2	NOT CONNECTED
3	LIVE
4	NOT CONNECTED
5	NEUTRAL

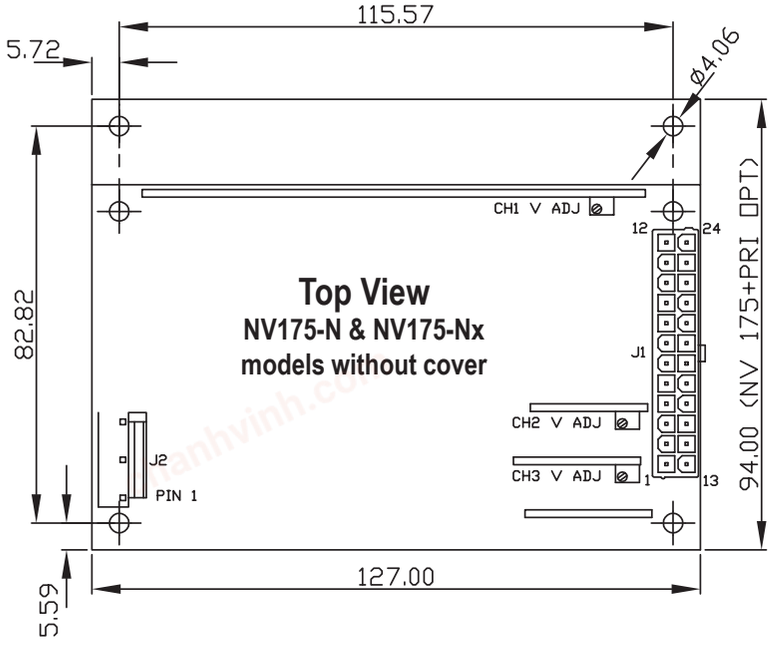

J1

PIN	FUNCTION	PIN	FUNCTION
12	STANDBY +Ve	24	STANDBY RETURN
11	POWER GOOD	23	REMOTE ON/OFF
10	CH1 OUTPUT	22	CH1 GOOD
9	CH1 OUTPUT	21	CH1 OUTPUT
8	CH1 OUTPUT	20	CH1 OUTPUT
7	+SENSE CH1	19	-SENSE CH1
6	0V COMMON	18	0V COMMON
5	0V COMMON	17	0V COMMON
4	CH2 OUTPUT	16	0V COMMON
3	CH2 OUTPUT	15	CH2 OUTPUT
2	+SENSE CH2	14	-SENSE CH2
1	CH3 OUTPUT	13	CH4 OUTPUT

MATING PARTS (MOLEX OR EQUIVALENT)

CONN	HOUSING	PINS
J1	39-01-2245	44476-3112
J2	09-50-8051	08-52-0113

Input and output connectors are not included with the product. They are available from TDK-Lambda

Part Number	Contents
94910	1 off input connector and 3 crimps
94911	1 off output connector and 24 crimps

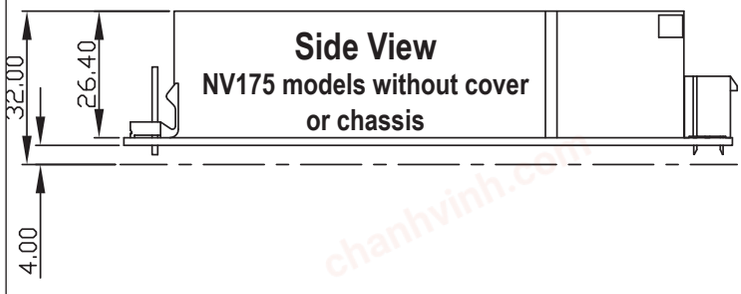

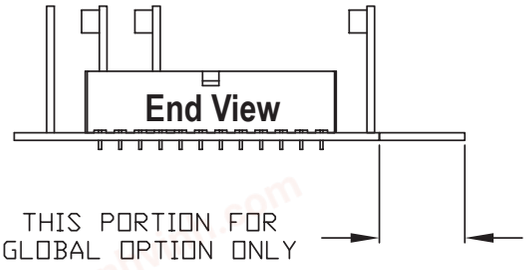

Notes: 1. All customer fixings M3 2. Maximum thread penetration 4.5mm 3. Maximum torque 0.9Nm 4. All tolerances +/-0.5mm

chanhvinh.com

TDK·Lambda

Outline & Connection Drawings

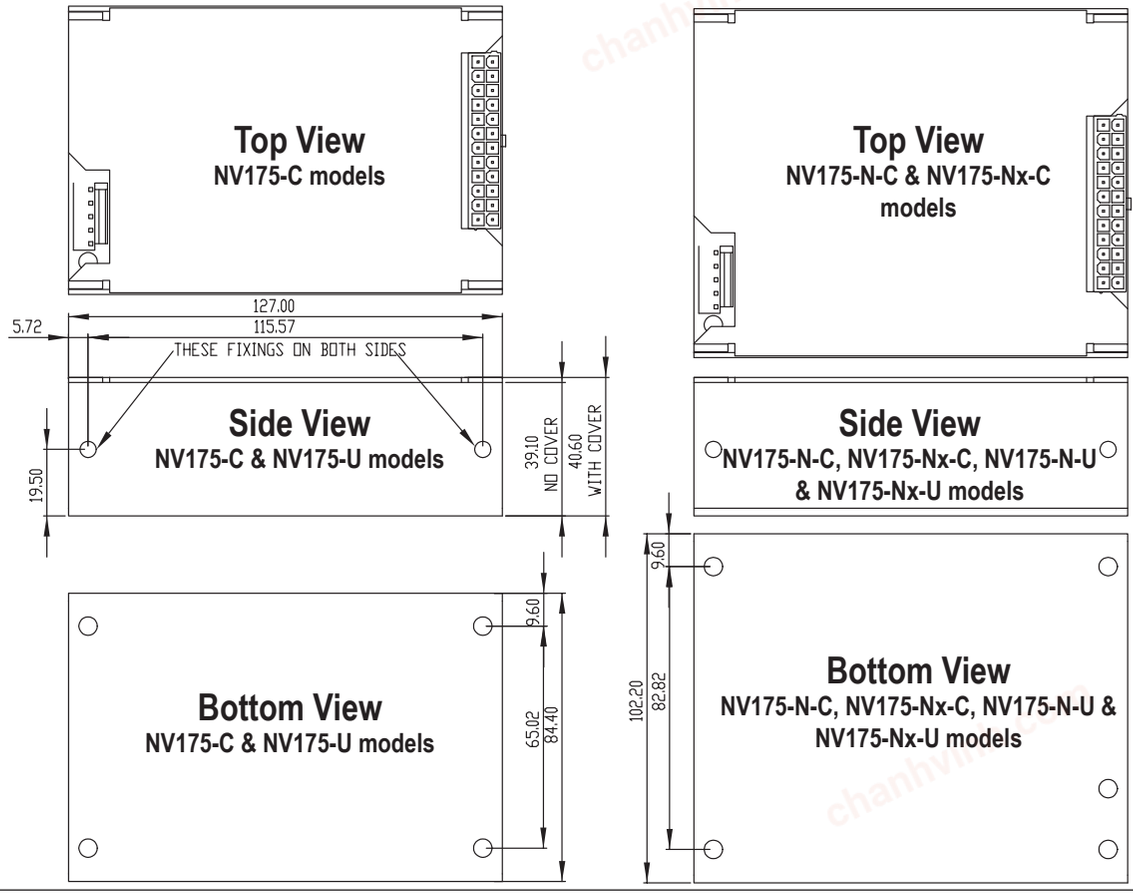

NV-175 units with fan (-F or -I)

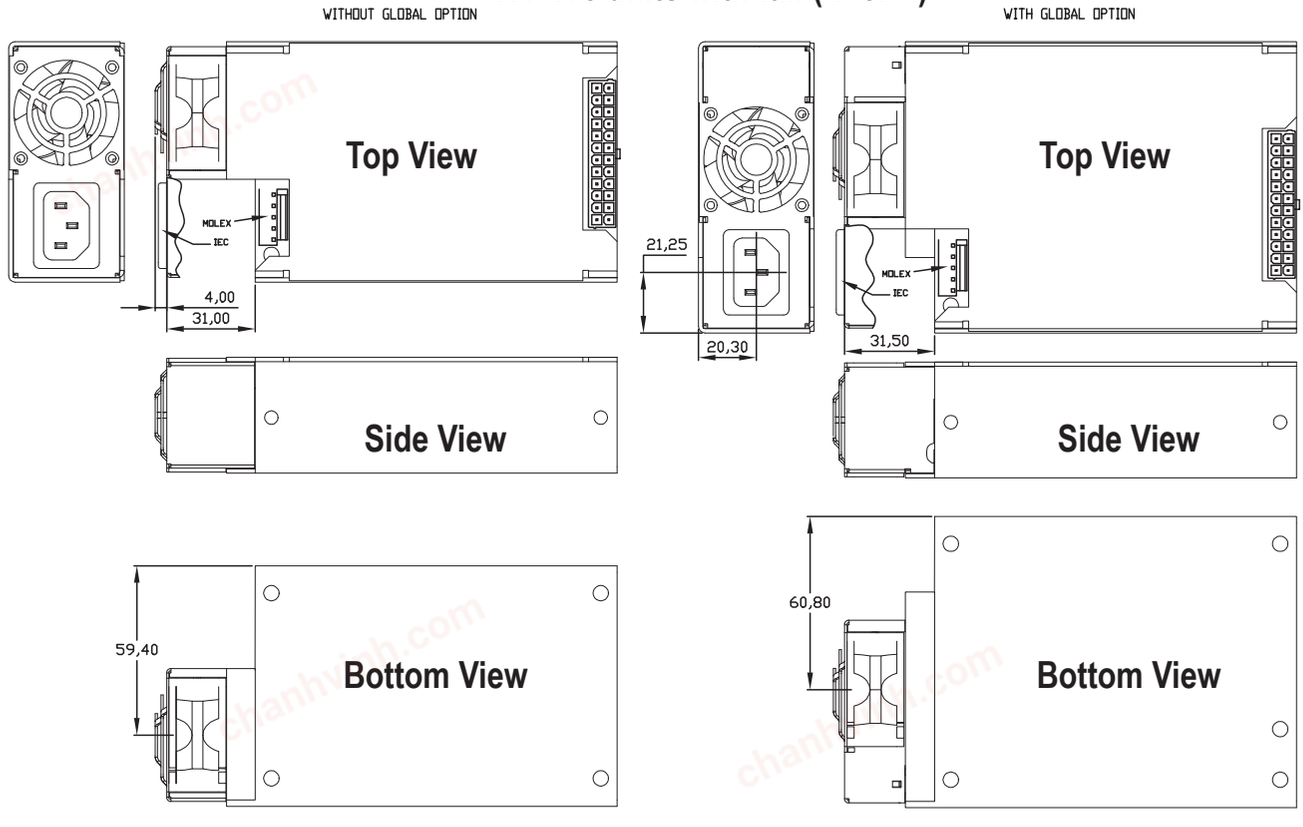

Other dimensions same as cases without fans (above)

Notes: 1. All customer fixings M3 2. Maximum thread penetration 4.5mm 3. Maximum torque 0.9Nm 4. All tolerances +/-0.5mm

chanhvinh.com

TDK·Lambda



TDK-Lambda France SAS
ZAC des Delaches
CS 41077
9 rue Thuillere
91978 Villebon Courtaboeuf
France
Tel: +33 1 60 12 71 65
Fax: +33 1 60 12 71 66
france@fr.tdk-lambda.com
www.fr.tdk-lambda.com



Italy Sales Office
Via dei Lavoratori 128/130
20092 Cinisello Balsamo (MI)
Italy
Tel: +39 02 61 29 38 63
Fax: +39 02 61 29 09 00
info.italia@it.tdk-lambda.com
www.it.tdk-lambda.com



Netherlands
info@tdk-lambda.nl
www.tdk-lambda.nl



TDK-Lambda Germany GmbH
Karl-Bold-Strasse 40
77855 Achern
Germany
Tel: +49 7841 666 0
Fax: +49 7841 5000
info.germany@de.tdk-lambda.com
www.de.tdk-lambda.com



Austria Sales Office
Aredstrasse 22
2544 Leobersdorf
Austria
Tel: +43 2256 655 84
Fax: +43 2256 645 12
info.germany@de.tdk-lambda.com
www.de.tdk-lambda.com



Scandinavia Sales Office
Valdemarsgade 7
4100 Ringsted
Denmark
Tel: +45 24 63 95 65
Fax: +45 69 80 44 99
info@de.tdk-lambda.com
www.emea.tdk-lambda.com



Switzerland Sales Office
Bahnhofstrasse 50
8305 Dietlikon
Switzerland
Tel: +41 44 850 53 53
Fax: +41 44 850 53 50
info@de.tdk-lambda.com
www.de.tdk-lambda.com

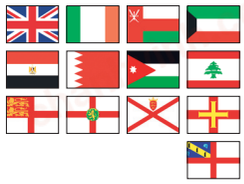

TDK-Lambda UK Ltd.
Kingsley Avenue
Ilfracombe
Devon EX34 8ES
United Kingdom
Tel: +44 (0) 12 71 85 66 66
Fax: +44 (0) 12 71 86 48 94
powersolutions@uk.tdk-lambda.com
www.uk.tdk-lambda.com



TDK-Lambda Ltd.
Kibbutz
Givat Hashlosha 48800
Israel
Tel: +9 723 902 4333
Fax: +9 723 902 4777
info@tdk-lambda.co.il
www.tdk-lambda.co.il



Russia
Technical Support:
St Petersburg
Tel: +7 (812) 6580463
Sales:
Moscow
info@tdk-lambda.ru
www.tdk-lambda.ru

Local Distribution

www.emea.tdk-lambda.com

NV175 69530-Rev 25