chanhvinh.com

TDK·Lambda

Innovating Reliable Power



- High MTBF up to 900 000 hours
- Superior operating temperature performance up to 70°C
- Very High efficiency up to 87%
- Very Low Cost
- Compact
- Withstands 300VAC surges (5s)
- Five Year Warranty

LS25-150 Series

Single Output General Purpose Power Supplies

Key Market Segments & Applications

Test & Measurement
Automated Service
Factory Automation
General Purpose
LED Lighting & Display

LS25-150 Features and Benefits

Features	Benefits
• High MTBF	• Superior Reliability
• High efficiency	• Easier system cooling
• -25 to +70°C operating temperature	• Suitable for indoor & outdoor enclosures
• Low derating above 50 °C (up to 70% load available at 70° C)	• Improved system power optimisation
• Curve B EMC	• Assists system compliance

Specifications

ITEMS		LS25	LS35	LS50	LS75	LS100	LS150
AC Input Voltage (300VAC for 5s)	VAC	88 - 264VAC (See note (2) for LS100)					88-132/176-264VAC(1)
Input Frequency	Hz	47 - 63Hz					
DC Input Voltage	VDC	125 - 373VDC				248 - 273VDC	
Inrush Current (230VAC, cold start)	A	30	40	40	40	60	40
Power Factor	-	Meets EN61000-3-2, -3					
Input Current (115/230VAC)	A	0.7 / 0.4	0.8 / 0.55	1.3 / 0.8	1.6 / 1.0	2.2 / 1.2	3.5 / 2
Temperature Coefficient	-	<0.02%/°C (0 - 50°C)					
Overcurrent Protection	-	> 110%					
Overvoltage Protection	V	3.3V: 3.8-4.45V, 5V: 5.75-6.75V, 12V: 13.8-16.2V, 15V: 17.25-20.25V,24V: 27.6-32.4V, 36V: 41.4-48.6V, 48V: 55.2-64.8V					
Hold Up Time (115 / 230V input)	ms	14 / 80	12 / 80	14 / 60	14 / 60	25 / 150	20 / 28
Leakage Current (230VAC 60Hz)	mA	<1mA					
Remote Sense	-	No					
LED Indicator	-	Green LED = On					
Operating Temperature	-	-25 to +70°C. Derate linearly to 50% load from +50 to +70°C (2)					
Storage Temperature	°C	-40 to +85°C					
Operating Humidity	-	20 - 90% RH (non condensing)					
Storage Humidity	-	10 - 95% RH (non condensing)					
Cooling	-	Convection					
Withstand Voltage	-	Input to Ground 1.5kVAC, Input to Output 3kVAC, Output to Ground 500VAC for 1 min.					
Isolation Resistance	-	>100MΩ at 25°C & 70%RH, Output to Ground 500VDC					
Vibration (non operating)	-	10 - 55Hz: 19.6m/s^2 constant sweep 1 min X, Y, Z for 1 hour					
Shock	-	< 196.1 m/s^2 (20G)					
Immunity	-	IEC61000-4-2, -3, -4, -5, -6, -8, -11					
Safety Agency Certifications	-	IEC/EN/UL/CSA60950-1, IEC/EN/UL/CSA62368-1 and CE Mark					
Conducted & Radiated EMI	-	EN55011/EN55022-B, FCC-B					
MTBF (MIL-HDBK-217F)	hrs	906.997	706.464	712,890	648,786	545,375	505,393
Weight (Typ)	g	170	270	350	410	600	700
Size (LxWxH)	mm	79 x 51 x 28	99 x 82 x 36	99 x 97 x 36	130 x 97 x 38	160 x 97 x 38	198 x 99 x 38
Warranty	yrs	5					

chanhvinh.com

Model Selector

Model	Voltage	Adjust Range (V)	Max Current (A)	Load Reg (mV)	Line Reg (mV)	Ripple Noise (mV)	Efficiency (typ) %
LS25-3.3	3.3V	2.85 - 3.6	6	66	16.5	80	72
LS25-5	5V	4.5 - 5.5	5	50	25	80	77
LS25-12	12V	10.8 - 13.2	2.1	60	60	120	79
LS25-15	15V	13.5 - 16.5	1.7	75	75	120	82
LS25-24	24V	22 - 27.6	1.1	120	120	120	84
LS25-36	36V	32 - 40	0.75	150	150	150	85
LS25-48	48V	42 - 54	0.57	180	180	200	85
LS35-3.3	3.3V	2.85 - 3.6	7	66	16.5	80	73
LS35-5	5V	4.5 - 5.5	7	50	25	80	77
LS35-12	12V	10.8 - 13.2	3	60	60	120	81
LS35-15	15V	13.5 - 16.5	2.4	75	75	120	83
LS35-24	24V	22 - 27.6	1.5	120	120	120	84
LS35-36	36V	32 - 40	1	150	150	150	84
LS35-48	48V	42 - 54	0.8	180	180	200	84
LS50-3.3	3.3V	3.0 - 3.6	10	40	20	80	75
LS50-5	5V	4.75 - 5.5	10	40	20	80	80
LS50-12	12V	10.8 - 13.2	4.2	96	48	120	84
LS50-15	15V	13.5 - 16.5	3.4	120	60	120	85
LS50-24	24V	22 - 27.2	2.2	192	96	120	86
LS50-36	36V	32 - 40	1.4	288	144	150	86
LS50-48	48V	42 - 54	1.1	384	192	200	86
LS75-3.3	3.3V	3.0 - 3.6	15	40	20	80	75
LS75-5	5V	4.75 - 5.5	12	40	20	80	79
LS75-12	12V	10.8 - 13.2	6	96	48	120	84
LS75-15	15V	13.5 - 16.5	5	120	60	120	85
LS75-24	24V	22 - 27.2	3.2	192	96	120	86
LS75-36	36V	32 - 40	2.1	288	144	150	86
LS75-48	48V	42 - 54	1.6	384	192	200	87
LS100-3.3	3.3V	3.0 - 3.6	20	66	16.5	80	74
LS100-5	5V	4.75 - 5.5	16	50	25	80	77
LS100-12	12V	10.8 - 13.2	8.5	60	60	120	81
LS100-15	15V	13.5 - 16.5	7	75	75	120	82
LS100-24	24V	22 - 27.2	4.5	120	120	120	84
LS100-36	36V	32 - 40	3	150	150	150	84
LS100-48	48V	42 - 54	2.3	180	180	200	84
LS150-3.3	3.3V	3.0 - 3.6	30	66	16.5	80	74
LS150-5	5V	4.75 - 5.5	26	50	25	80	78
LS150-12	12V	10.8 - 13.2	12.5	60	60	120	83
LS150-15	15V	13.5 - 16.5	10	75	75	120	84
LS150-24	24V	22 - 27.2	6.5	120	120	120	86
LS150-36	36V	32 - 40	4.3	150	150	150	86
LS150-48	48V	42 - 54	3.3	180	180	200	87

Notes: See page 1

(1) Switch selectable for 115 or 230VAC

(2) LS50, LS75-3.3 & -5: Derate linearly to 70% load from +50 to +70°C.
LS75-12,-15,-24,-36,-48 Derate linearly to 60% load from +50 to +70°C.
LS100-3.3 & 5 Derate linearly to 60% load from +45 to +70°C. Derate linearly to 80% load from 115V to 88VAC input.
LS100-12,-15,-24,-36,-48 Derate linearly to 60% load from +50 to +70°C. Derate linearly to 80% load from 115V to 88VAC input.
LS150-3.3 & 5 Derate linearly to 50% load from +40 to +70°C.
LS150-12,-15,-24,-36,-48 Derate linearly to 70% load from +50 to +70°C.

chanhvinh.com

Outline Drawing LS25

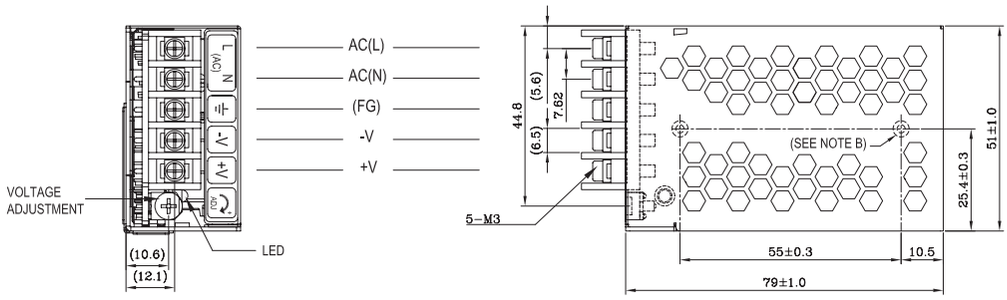

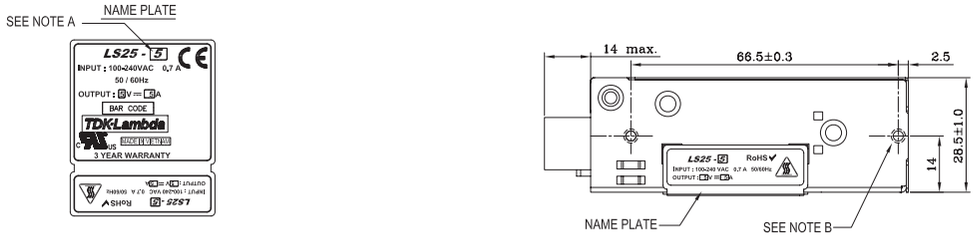

NOTES

A. MODEL NAME , INPUT VOLTAGE RANGE , NOMINAL OUTPUT VOLTAGE , MAXIMUM OUTPUT CURRENT & COUNTRY OF MANUFACTURE ARE SHOWN IN ACCORDANCE WITH THE SPECIFICATION.
B. M3 TAPPED , EMBOSSED & COUNTERSUNK HOLES (4) FOR CUSTOMER CHASSIS MOUNTING. SCREWS MUST NOT PROTRUDE INTO POWER SUPPLY BY MORE THAN 4mm.
C. UNLESS OTHERWISE SPECIFIED, DIMENSION TOLERANCE = ±0.3mm.

Outline Drawing LS35

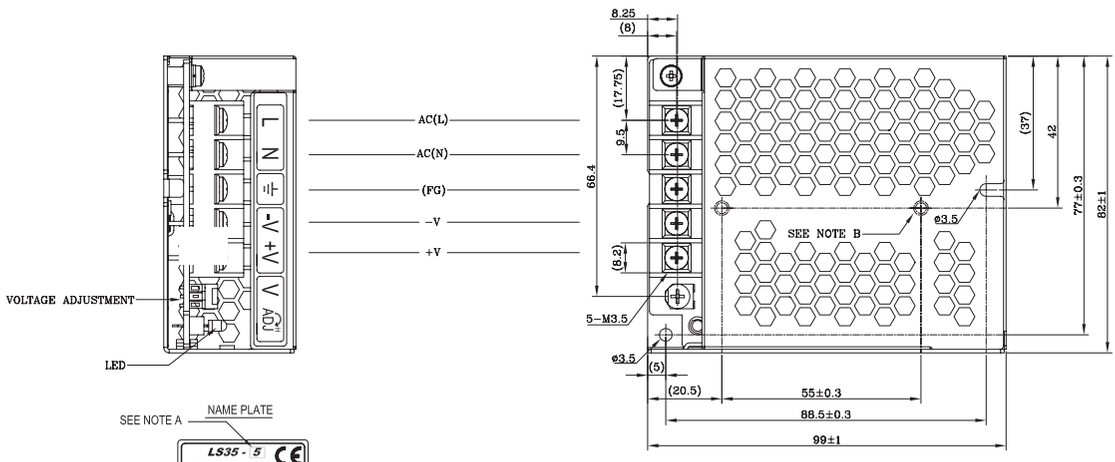

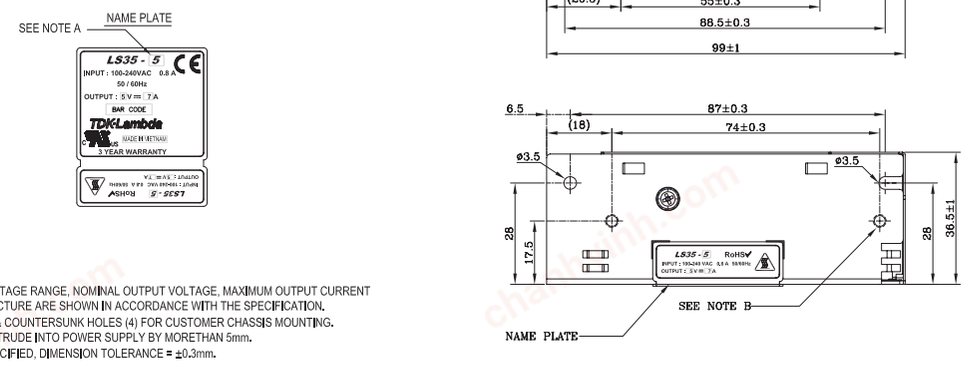

NOTES

A. MODEL NAME, INPUT VOLTAGE RANGE, NOMINAL OUTPUT VOLTAGE, MAXIMUM OUTPUT CURRENT & COUNTRY OF MANUFACTURE ARE SHOWN IN ACCORDANCE WITH THE SPECIFICATION.
B. M3 TAPPED, EMBOSSED & COUNTERSUNK HOLES (4) FOR CUSTOMER CHASSIS MOUNTING. SCREWS MUST NOT PROTRUDE INTO POWER SUPPLY BY MORETHAN 5mm.
C. UNLESS OTHERWISE SPECIFIED, DIMENSION TOLERANCE = ±0.3mm.

chanhvinh.com

Outline Drawing LS50

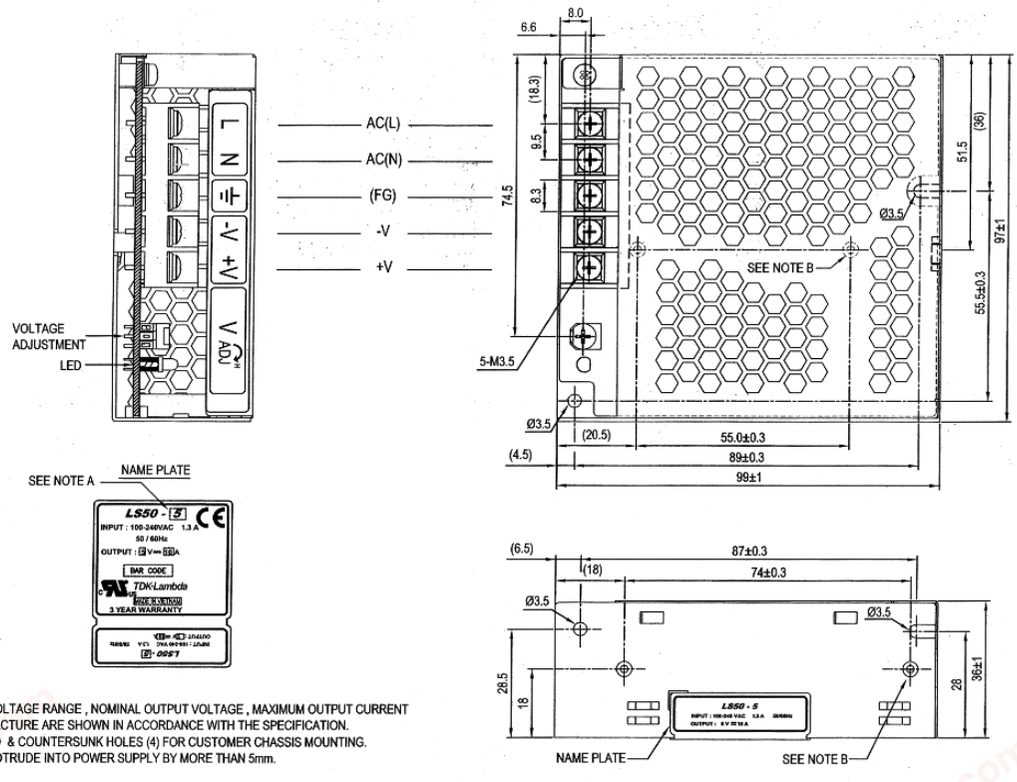

NOTES

A. MODEL NAME , INPUT VOLTAGE RANGE , NOMINAL OUTPUT VOLTAGE , MAXIMUM OUTPUT CURRENT & COUNTRY OF MANUFACTURE ARE SHOWN IN ACCORDANCE WITH THE SPECIFICATION.
B. M3 TAPPED , EMBOSSED & COUNTERSUNK HOLES (4) FOR CUSTOMER CHASSIS MOUNTING. SCREWS MUST NOT PROTRUDE INTO POWER SUPPLY BY MORE THAN 5mm.

Outline Drawing LS75

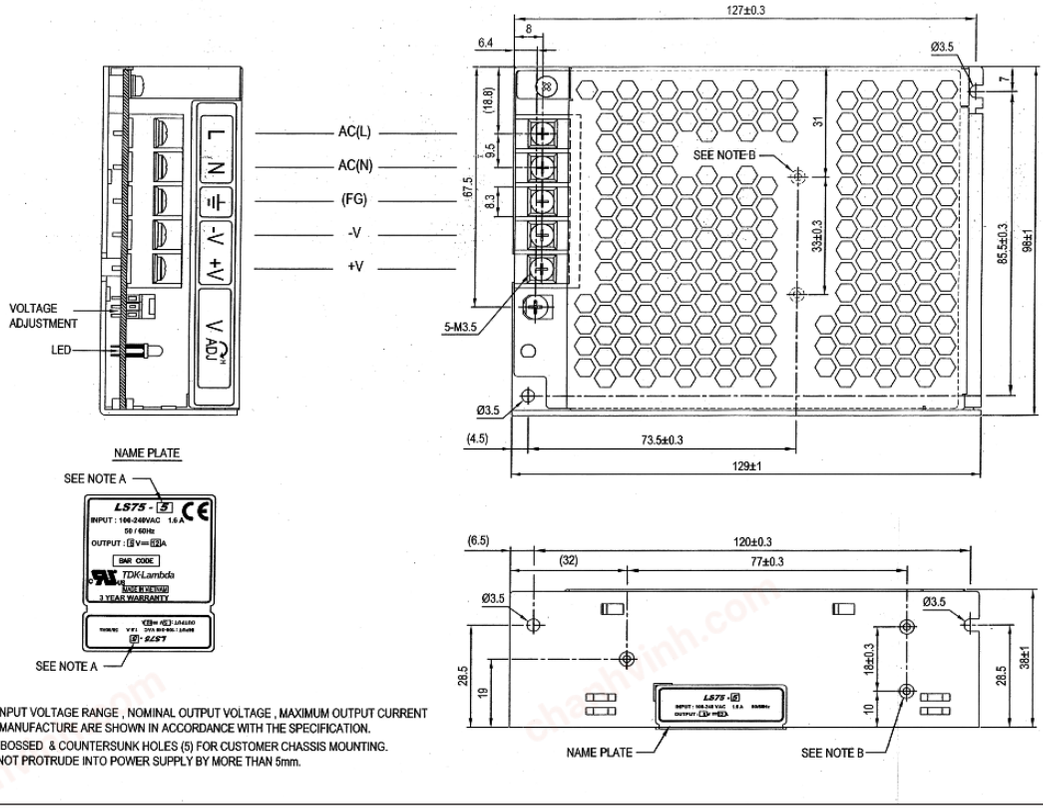

NOTES

A. MODEL NAME , INPUT VOLTAGE RANGE , NOMINAL OUTPUT VOLTAGE , MAXIMUM OUTPUT CURRENT & COUNTRY OF MANUFACTURE ARE SHOWN IN ACCORDANCE WITH THE SPECIFICATION.
B. M3 TAPPED , EMBOSSED & COUNTERSUNK HOLES (5) FOR CUSTOMER CHASSIS MOUNTING. SCREWS MUST NOT PROTRUDE INTO POWER SUPPLY BY MORE THAN 5mm.

chanhvinh.com

Outline Drawing LS100

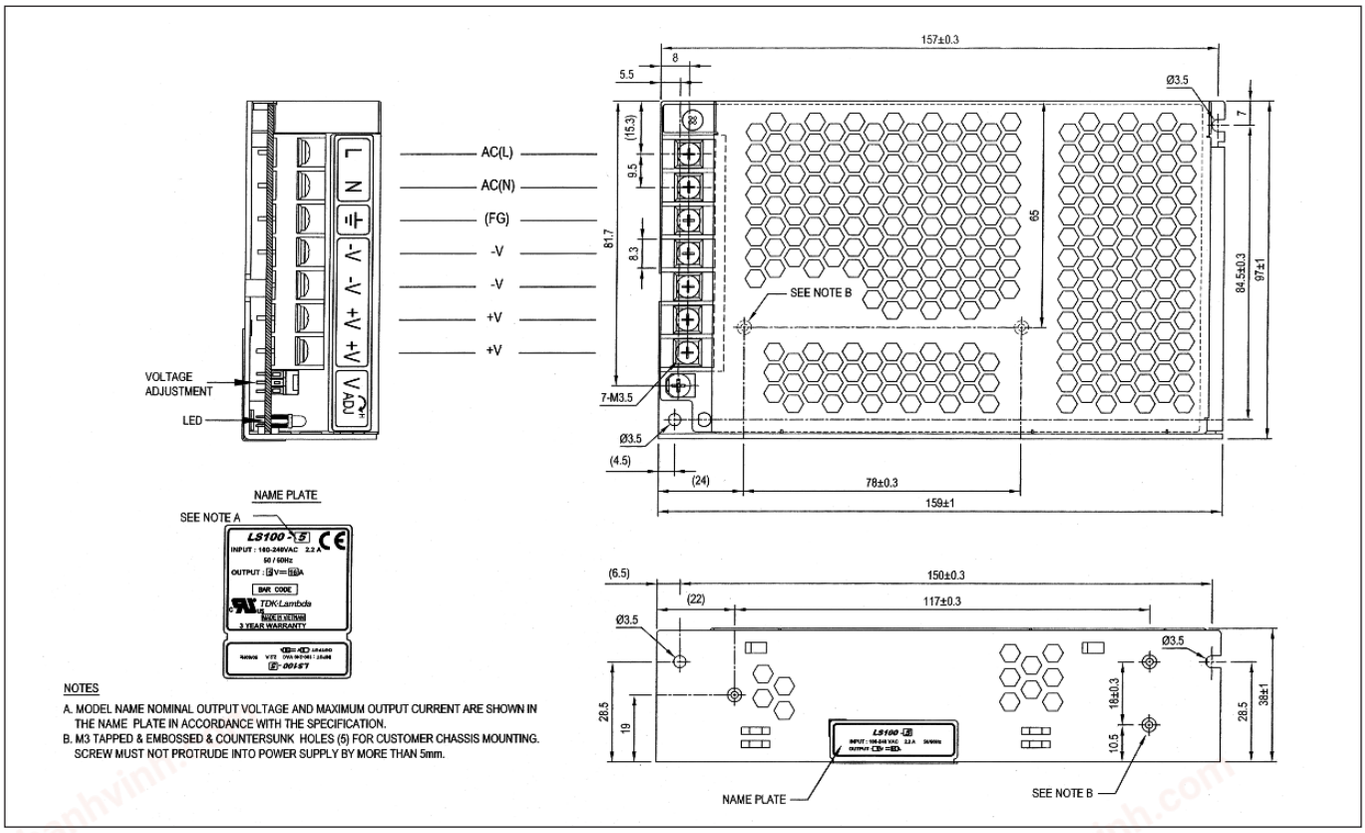

Outline Drawing LS150

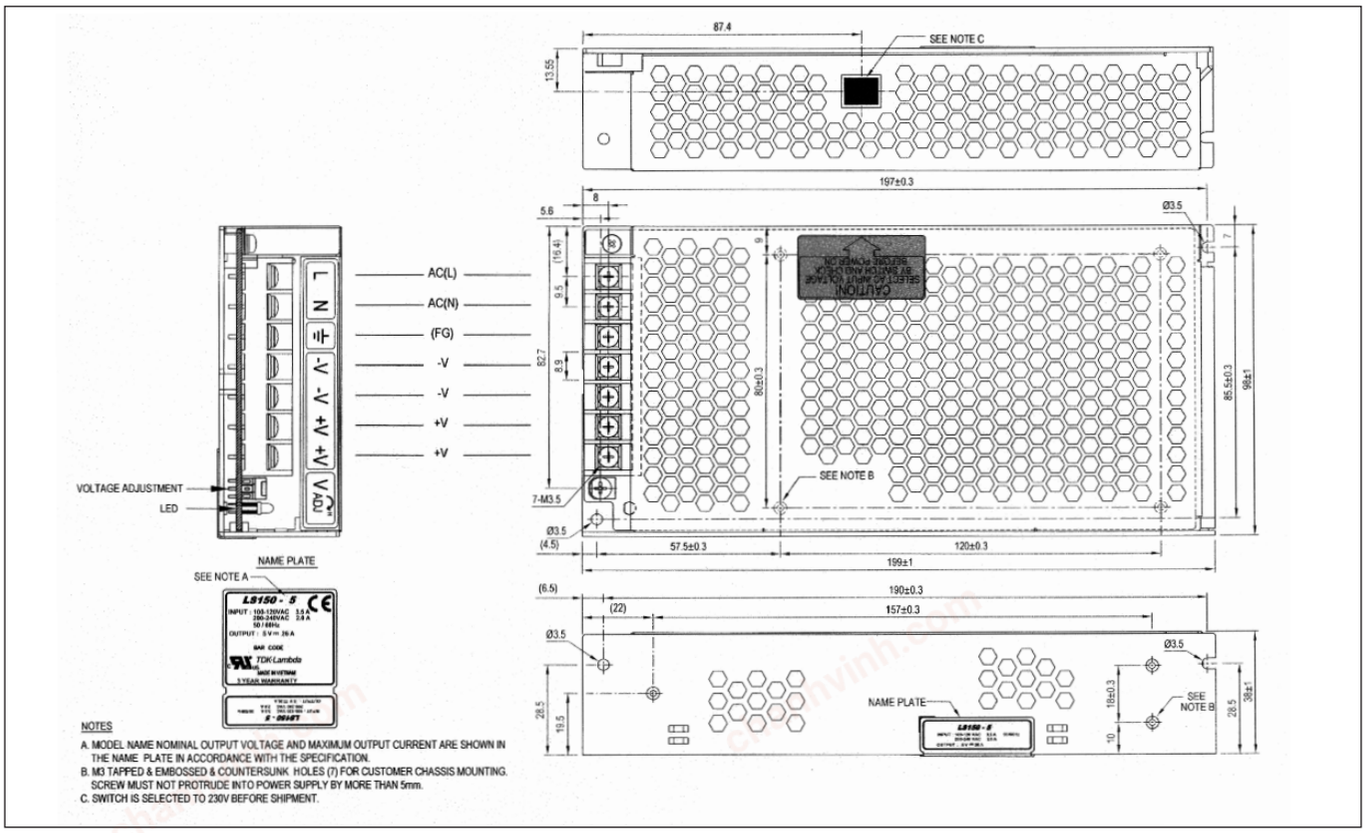

chanhvinh.com

TDK·Lambda

Innovating Reliable Power



TDK-Lambda France SAS
3 Avenue du Canada
Parc Technopolis
Bâtiment Sigma
91940 les Ulis
France
Tel: +33 1 60 12 71 65
Fax: +33 1 60 12 71 66
france@fr.tdk-lambda.com
www.emea.lambda.tdk.com/fr



Italy Sales Office
Via Giacomo Matteotti 62
20092 Cinisello Balsamo (MI)
Italy
Tel: +39 02 61 29 38 63
Fax: +39 02 61 29 09 00
info.italia@it.tdk-lambda.com
www.emea.lambda.tdk.com/it



Netherlands
info@nl.tdk-lambda.com
www.emea.lambda.tdk.com/nl



TDK-Lambda Germany GmbH
Karl-Bold-Strasse 40
77855 Achern
Germany
Tel: +49 7841 666 0
Fax: +49 7841 5000
info.germany@de.tdk-lambda.com
www.emea.lambda.tdk.com/de



Austria Sales Office
Aredstrasse 22
2544 Leobersdorf
Austria
Tel: +43 2256 655 84
Fax: +43 2256 645 12
info@at.tdk-lambda.com
www.emea.lambda.tdk.com/at



Switzerland Sales Office
Eichtalstrasse 55
8634 Hombrechtikon
Switzerland
Tel: +41 44 850 53 53
Fax: +41 44 850 53 50
info@ch.tdk-lambda.com
www.emea.lambda.tdk.com/ch



Nordic Sales Office
Haderslevvej 36B
DK-6000 Kolding
Denmark
Tel: +45 8853 8086
info@dk.tdk-lambda.com
www.emea.lambda.tdk.com/dk

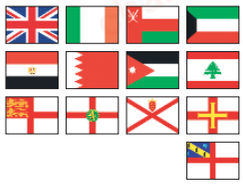

TDK-Lambda UK Ltd.
Kingsley Avenue
Ilfracombe
Devon EX34 8ES
United Kingdom
Tel: +44 (0) 12 71 85 66 66
Fax: +44 (0) 12 71 86 48 94
powersolutions@uk.tdk-lambda.com
www.emea.lambda.tdk.com/uk



TDK-Lambda Ltd.
1 Alexander Yanai
Segula
Petah-Tikva
Israel
Tel: +9 723 902 4333
Fax: +9 723 902 4777
info@tdk-lambda.co.il
www.emea.lambda.tdk.com/il



C.I.S.
Commercial Support:
Tel: +7 (495) 665 2627
Technical Support:
Tel: +7 (812) 658 0463
info@tdk-lambda.ru
www.emea.lambda.tdk.com/ru

Local Distribution

www.emea.lambda.tdk.com