chanhvinh.com

TDK·Lambda

KMS-A Series

https://product.tdk.com/en/power/kms-a
https://www.emea.lambda.tdk.com/kms-a

15-60W Medical AC-DC PCB-Mount Power Supplies



Medical | Industrial | Test | COMM | Broadcast

The encapsulated KMS-A PCB-Mount power supplies are certified to IEC/ES/EN 60601-1, IEC/EN 62368-1 and meet EN55011 Class B for conducted and radiated emissions. Requiring no earth ground, the KMS-A series is ideally suited for a wide range of medical and industrial applications, including dental, home healthcare and test and measurement.

Features	Benefits
• 4kVac Input to Output Isolation (2 x MoPP)	• Suitable for B & BF Applications Worldwide
• Wide Temperature Range (up to -40 to +80°C)	• Suitable for Harsh Environments
• Low No Load Power Consumption	• Energy Saving
• Class II Double Insulated Construction	• No Ground Connection Needed
• Epoxy Encapsulated	• Improved Shock and Vibration Performance

Model Selector

Model	Output Voltage (V)	Maximum Current (A)	Maximum Power (W)	Ripple & Noise (mVpk-pk)	Efficiency (at 230Vac) (%)	Maximum Load Capacitance (uF)
KMS15A-5	5	3	15	120	79	7,000
KMS30A-5	5	5	25	100	84	6,800
KMS60A-5	5.1	10	51	100	86	10,000
KMS15A-9	9	1.666	15	120	80	5,000
KMS60A-9	9	6.666	60	100	87	5,000
KMS15A-12	12	1.25	15	120	84	1,500
KMS30A-12	12	2.5	30	150	89	1,600
KMS60A-12	12	5	60	120	88	5,000
KMS15A-15	15	1	15	150	84	1,000
KMS30A-15	15	2	30	150	86	1,200
KMS60A-15	15	4	60	150	86	4,000
KMS15A-24	24	0.625	15	240	85	470
KMS30A-24	24	1.25	30	240	86	470
KMS60A-24	24	2.5	60	240	87	2,000

KMS	15A	-24	/SC
	15A 15W Output Power 30A 30W Output Power 60A 60W Output Power	-5 5V Output (5.1V for 60W Model) -9 9V Output (15W and 60W Models) -12 12V Output -15 15V Output -24 24V Output	Blank PCB mount standard model /SC Screw terminals (Not sold in the Americas)

chanhvinh.com

Specifications

Model		KMS15A	KMS30A	KMS60A
Input				
Input Voltage Range (Operating)(1)	Vac	90 - 264		
Nominal Input Voltage Range	Vac	100 - 240		
Input Frequency	Hz	47 - 440 (Note: Safety certified for 47-63Hz only)		
DC Input Voltage Range	Vdc	120 - 370 (Note: Safety certified for AC input only)		
Input Current (115 / 230Vac)	A	0.385 / 0.25	0.65 / 0.4	1.5 / 1
Inrush Current (115 / 230Vac, 25°C)	A	20 / 40	30 / 60	55 / 95
Leakage Current (264Vac)	mA	<0.1		
No Load Power Consumption	W	<0.1	<0.15	<0.3
Hold Up Time (typ) (115 / 230Vac)	ms	15 / 56	>10	
Efficiency	-	See Model Selector Table		
Conducted & Radiated EMI	-	EN55011-B (Class A radiated EMI for 30W models)		
Safety Certifications and Markings	-	IEC/EN62368-1, IEC/EN60601-1, ANSI/AAMI ES60601-1, CE Mark and UKCA Mark		

Immunity

Test	Standard	Test Level	Criteria	Notes
ESD	IEC61000-4-2	3	A	Contact Discharge: ±6kV, Air Discharge: ±8kV
Electrical Fast Transient Burst	IEC61000-4-4	3	A	Voltage Peak: 2kV at 5kHz
Surge	IEC61000-4-5	2	A	Test Level: 1kV, Max Peak Current: 500A
Conducted Susceptibility	IEC61000-4-6	2 / 3	A	Test Level: 3Vrms / 10Vrms for KMS30A Models
Voltage Dips and Short Interruptions	IEC61000-4-11 (100Vac)	0% for 1/2 cycle	A	-
		0% for 1 cycle	B	-
		70% for 25/30 cycles	A	-
		0% for 250/300 cycles	B	-
Voltage Dips and Short Interruptions	IEC61000-4-11 (240Vac)	0% for 1/2 cycle	A	-
		0% for 1 cycle	A	-
		70% for 25/30 cycles	A	-
		0% for 250/300 cycles	B	-

Specifications

Model		KMS15A	KMS30A	KMS60A
Output				
Output Voltage Set Accuracy	%	±2		
Output Voltage Adjustment	-	None		
Ripple and Noise	-	See Model Selector Table		
Switching Frequency	kHz	133	66	
Temperature Coefficient	%/°C	±0.05		
Minimum Load	-	None		
Overcurrent Protection	%	>105 (Hiccup Mode with Auto-Recovery)		
Overvoltage Protection	%	110-150 (Zener Diode Clamp)		
Parallel Operation	-	Not possible		

chanhvinh.com

Specifications

Model		KMS15A	KMS30A	KMS60A
Environmental				
Operating Temperature(2)	°C	-40 to +80, derate linearly to 30% load from 50 to 80. (73 maximum for <115Vac input)		
Maximum Case Temperature	°C	80 (73 for <115Vac)		
Storage Temperature	°C	-40 to +90		
Humidity (non condensing)	%RH	95		
Cooling	-	Convection		
Altitude	m	5,000		
Withstand Voltage (For 1 minute)	Vac	Input to Output 4,000 (2x MOPP)		
Other				
Weight (Typ)	g	60	135	260
Size (LxWxH)	mm	52.5 x 27.5 x 23.5	64.1 x 45.6 x 23.5	89.0 x 63.5 x 27.6
Size (LxWxH)	Inches	2.07 x 1.08 x 0.93	2.52 x 1.8 x 0.93	3.5 x 2.5 x 1.06
Case Material	-	Plastic Resin Fiberglass Case (UL 94V-0)		
MTBF (MIL-HDBK-217F, 25°C)	Hours	200,000 to 400,000 (Model Dependent)		
Warranty	yrs	3		

Notes:
See website for detailed specifications, test methods and installation manual
(1) Derate linearly to 80% load from 110Vac to 90Vac (100Vac to 90Vac for KMS15A)
(2) Derate linearly to 80% load from -30°C to -40°C

Pinout

Pin	KMS15A	KMS30A	KMS60A
1	AC (L)	AC (N)	AC (L)
2	AC (N)	AC (L)	AC (N)
3	+Vout	-Vout	+Vout
4	-Vout	No Pin	No Pin
5	-	+Vout	-Vout
6	-	-	No Pin
7	-	-	No Pin

KMS15A Outline Drawing

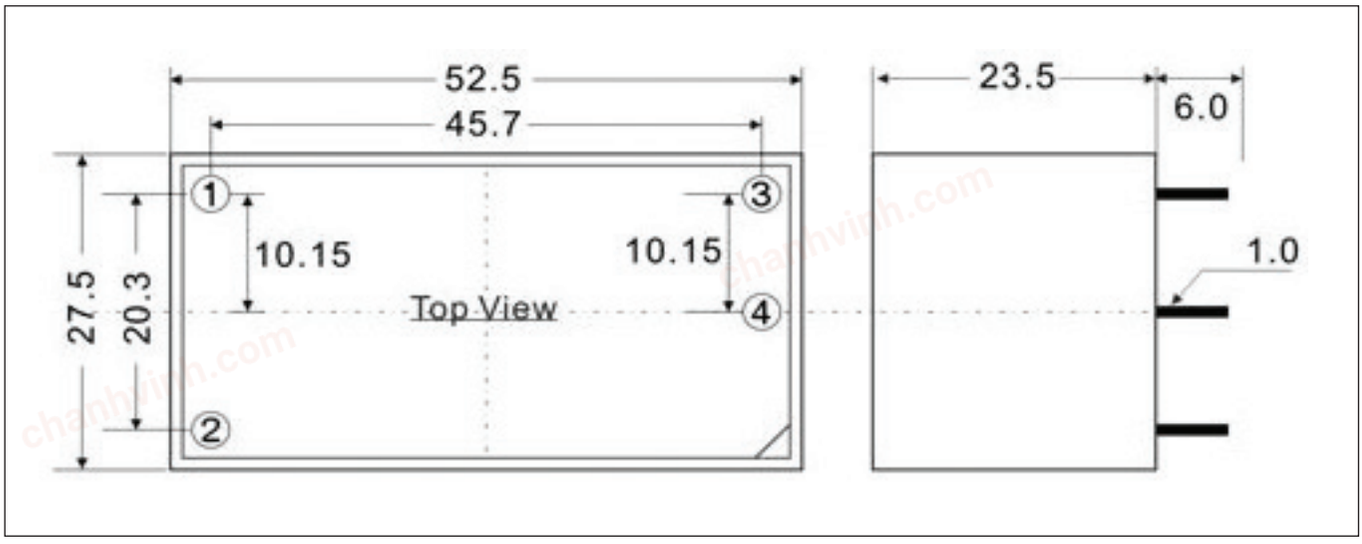

chanhvinh.com

KMS30A Outline Drawing

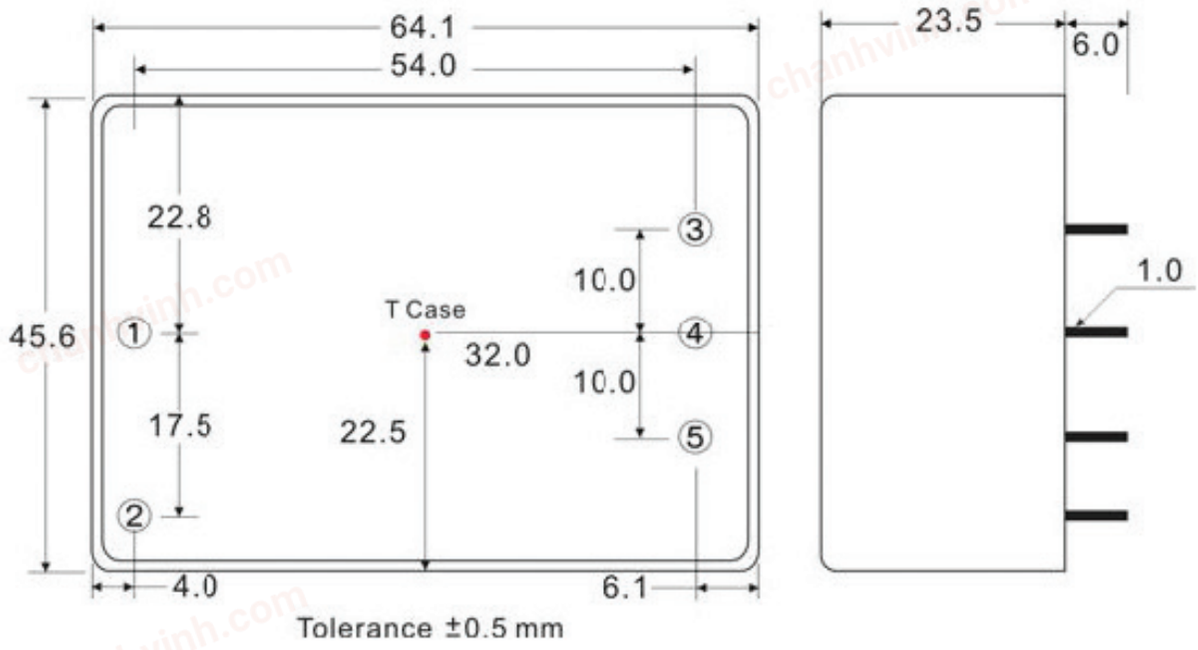

KMS60A Outline Drawing

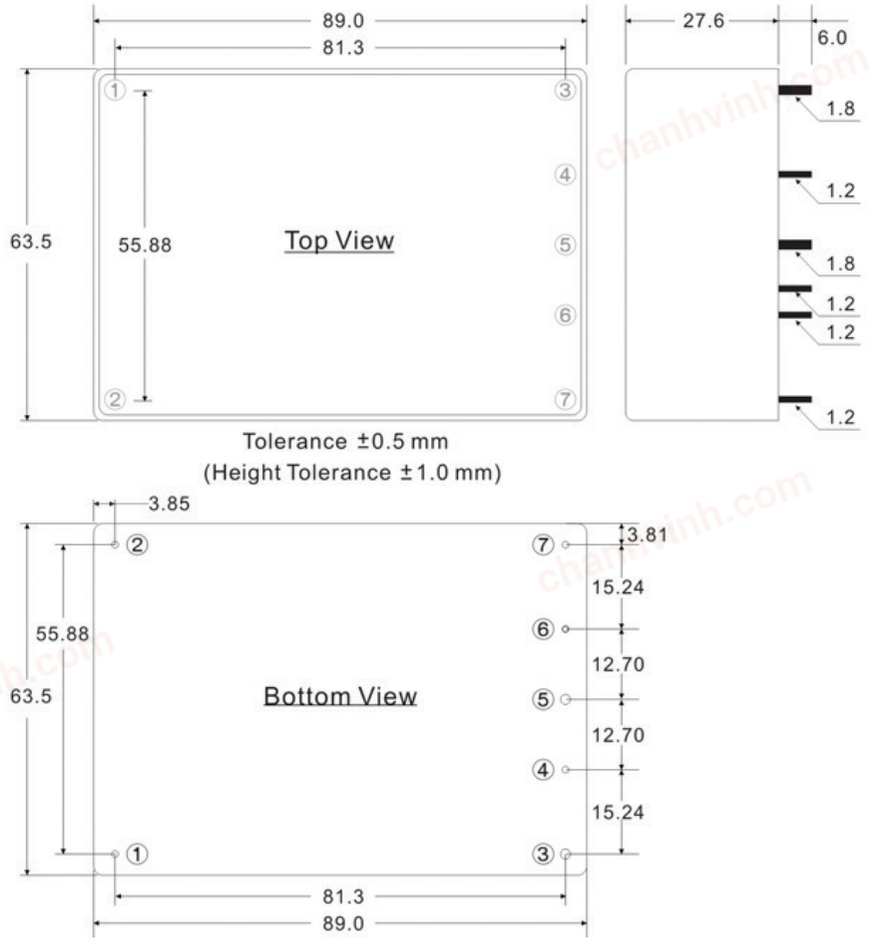

chanhvinh.com

KMS15A with Screw Terminals

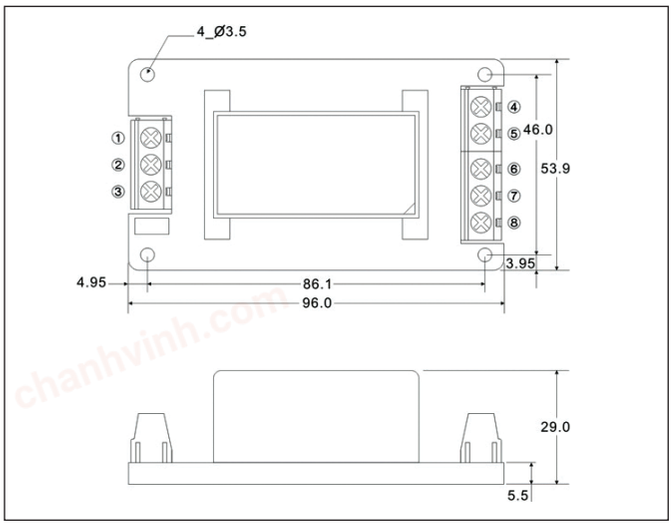

KMS15A /SC Pinout

Pin	Function
1	N/C
2	AC (L)
3	AC (N)
4	N/C
5	+DC Out
6	-DC Out
7	N/C
8	N/C

KMS30A with Screw Terminals

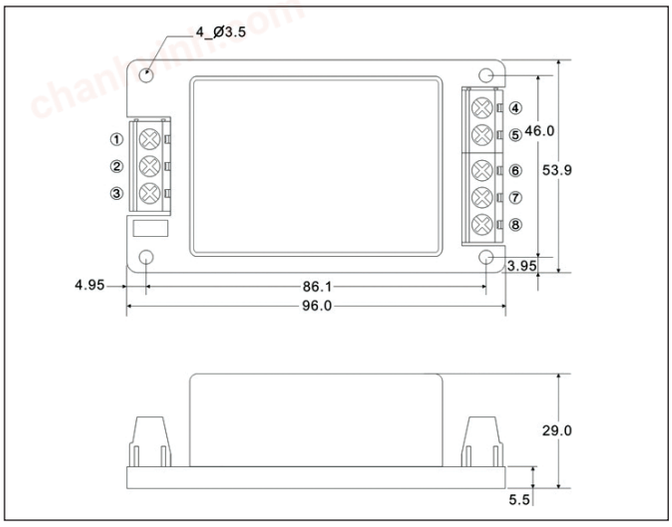

KMS30A /SC Pinout

Pin	Function
1	AC (N)
2	N/C
3	AC (L)
4	N/C
5	-DC Out
6	N/C
7	+DC Out
8	N/C

KMS60A with Screw Terminals

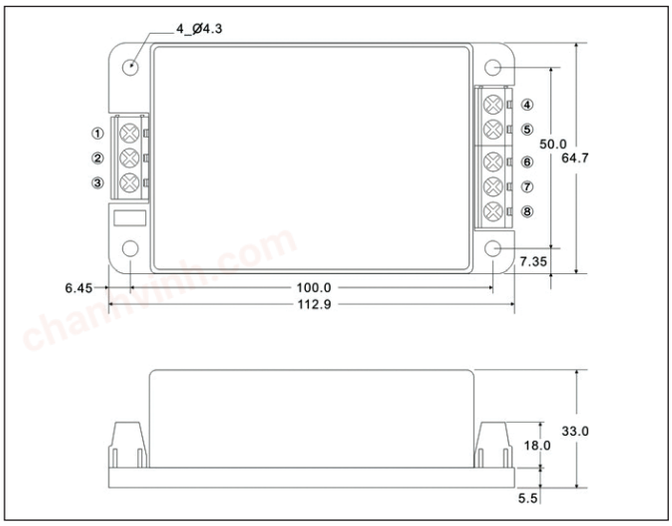

KMS60A /SC Pinout

Pin	Function
1	N/C
2	AC (L)
3	AC (N)
4	+DC Out
5	N/C
6	-DC Out
7	N/C
8	N/C

chanhvinh.com

Trusted • Innovative • Reliable

TDK·Lambda



TDK-Lambda France SAS
Tel: +33 1 60 12 71 65
tlf.fr-powersolutions@tdk.com
www.emea.lambda.tdk.com/fr



Italy Sales Office
Tel: +39 02 61 29 38 63
tlf.it-powersolutions@tdk.com
www.emea.lambda.tdk.com/it



Netherlands
tlf.nl-powersolutions@tdk.com
www.emea.lambda.tdk.com/nl



TDK-Lambda Germany GmbH
Tel: +49 7841 666 0
tlg.powersolutions@tdk.com
www.emea.lambda.tdk.com/de



Austria Sales Office
Tel: +43 2256 655 84
tlg.at-powersolutions@tdk.com
www.emea.lambda.tdk.com/at



Switzerland Sales Office
Tel: +41 44 850 53 53
tlg.ch-powersolutions@tdk.com
www.emea.lambda.tdk.com/ch



Nordic Sales Office
Tel: +45 8853 8086
tlg.dk-powersolutions@tdk.com
www.emea.lambda.tdk.com/dk



TDK-Lambda UK Ltd.
Tel: +44 (0) 12 71 85 66 66
tlu.powersolutions@tdk.com
www.emea.lambda.tdk.com/uk



TDK-Lambda Ltd.
Tel: +9 723 902 4333
tli.powersolutions@tdk.com
www.emea.lambda.tdk.com/il-en



TDK-Lambda Americas
Tel: +1 800-LAMBDA-4 or 1-800-526-2324
tla.powersolutions@tdk.com
www.us.lambda.tdk.com



TDK Electronics do Brasil Ltda
Tel: +55 11 3289-9599
sales.br@tdk-electronics.tdk.com
www.tdk-electronics.tdk.com/en



TDK-Lambda Corporation
Tel: +81-3-6778-1113
www.jp.lambda.tdk.com



TDK-Lambda (China) Electronics Co. Ltd.
Tel: +86 21 6485-0777
tlc.powersolutions@tdk.com
www.lambda.tdk.com.cn



TDK-Lambda Singapore Pte Ltd.
Tel: +65 6251 7211
tls.marketing@tdk.com
www.sg.lambda.tdk.com



TDK India Private Limited, Power Supply Division
Tel: +91 80 4039-0660
mathew.philip@tdk.com
www.sg.lambda.tdk.com

For additional information, please visit
https://product.tdk.com/en/power/

