chanhvinh.com

TDK·Lambda

HWS3000G Series

3,000W Programmable CVCC AC-DC Power Supplies

https://product.tdk.com/en/power/hws-g
www.emea.lambda.tdk.com/hws-g



Industrial | Test | LED | Broadcast | COMM | Semi-Fab

The compact HWS3000G AC-DC power supplies can deliver 1,500W with a low-line input voltage of 85 to 132Vac and 3,000W at high-line 170 to 265Vac. The nominal output voltages (24V, 48V, 60V or 130V) and output current are fully programmable (CV/CC) from zero up to their maximum rating. This can be achieved using a serial RS485 interface (MODBus protocol) or analog 1-5V or 4-20mA signal. Up to three units can be connected in series and / or ten units in parallel. The HWS3000G is packaged in a compact 270 x 150 x 61mm (10.6 x 5.9 x 2.4") footprint and has conservatively rated electrolytic capacitor temperatures for long field life. The warranty period is seven years(1).

Features	Benefits
• Serial or Analog Programming (CV/CC)	• Choice of Programming Interfaces
• Series and/or Parallel Operation	• Scalable Voltage and Current
• Compact 270 x 150 x 61mm (10.6 x 5.9 x 2.4") Footprint	• Space Saving in End Equipment
• Single and Three Phase Models (See Related Products)	• Global Use
• Seven Year Warranty(1)	• Low Cost of Ownership

Model Selector

Model	Nominal Output Voltage (V)	Output Adjustment (Potentiometer) (V)	Output Adustment (Programming) (V)	Output Current (A) (85 - 132Vac Input) (Programming)	Output Current (A) (170 - 265Vac Input) (Programming)	Max Power (85 - 132Vac) (W)	Max Power (170 - 265Vac) (W)	Efficiency (115 / 230Vac) (%)
HWS3000G-24	24	19.2 - 28.8	0 - 28.8	0 - 62.5	0 - 125	1500	3000	89 / 91
HWS3000G-48	48	38.4 - 52.8	0 - 52.8	0 - 31.3	0 - 62.6	1502.4	3004.8	90 / 92
HWS3000G-60	60	48.0 - 66.0	0 - 66.0	0 - 25	0 - 50	1500	3000	90 / 92
HWS3000G-130	130	104.0 - 156.0	0 - 156.0	0 - 11.6	0 - 23.2	1508	3016	91 / 93

HWS3000G	-	24
Series		Output voltage 24, 48, 60, 130

Related Products

Type	Part Number(s)	Description
3kW Programmable Power Supplies	HWS3000GT	3 phase 170- 265Vac input
100-800W Programmable Power Supplies	Z+ Low Voltage	Z+ 10V to 100V Programmable Power Supplies
100-800W Programmable Power Supplies	Z+ High Voltage	Z+ 160V to 650V Programmable Power Supplies

chanhvinh.com

Specifications

Model		HWS3000G-24	HWS3000G-48	HWS3000G-60	HWS3000G-130
Input					
Input Voltage Range (Operating)	Vac	85 - 265			
Nominal Input Voltage Range	Vac	100 - 120 / 200 - 240 (Note: Safety certified for 90 - 132 / 180 - 264Vac only)			
Input Frequency	Hz	47 - 63 (Note: Safety certified for 50-60Hz)			
Input Current at 115 / 230Vac	A	17.4 / 17.4	17.3 / 17.2	17.2 / 17.2	17.1 / 17.1
Inrush Current at 115 / 230Vac (Cold Start)	A	1st inrush: 30 / 60, 2nd Inrush: 80 / 80			
Leakage Current	mA	≤ 0.85 at 240Vac 60Hz			
Power Factor (100 / 200Vac)	-	0.97 / 0.95			
Harmonic Compliance	-	Meets IEC61000-3-2			
No Load Power Consumption	W	See evaluation data on website			
Hold Up Time (typ	ms	20 at 1500W, 10 at 3000W			
Efficiency	-	See model selector			
Conducted & Radiated EMI	-	EN55032A, EN55011-A, FCC-A			
Immunity	-	IEC61000-6-2, IEC61000-4.2, -3, -4, -5, -6, -8, -11			
Insulation Class	-	Class I			
Safety Certifications and Markings	-	IEC/EN/UL/CSA62368-1, IEC/EN62477-1 (OVC III, 2,000m altitude). CE Mark and UKCA Mark			

Immunity

Test	Standard	Test Level	Criteria	Notes
ESD	IEC61000-4-2	Contact Discharge: 1, 2	B	-
		Air Discharge: 1, 2, 3	B	-
Radiated Susceptibility	EN61000-4-3	2	A	1.4 - 6.0GHz
		3	A	80 - 1000MHz
Electrical Fast Transient Burst	EN61000-4-4	1, 2, 3	B	-
Surge	EN61000-4-5	1, 2, 3	B	Common mode
		2, 3	B	Normal mode
Conducted Susceptibility	EN61000-4-6	1, 2, 3	A	-
Magnetic fields	EN61000-4-8	1, 2, 3, 4	A	-
Voltage Dips and Input Interruptions	EN61000-4-11	30% 500ms	100Vac: B	-
			230Vac: A	-
		60% 200ms	100Vac: B	-
			230Vac: A	-
		100% 20ms	100Vac: A	-
			230Vac: B	-
		100% 5000ms	100Vac: B	-
			230Vac: B	-
SEMI F47 Line Dip	SEMI F47	-	-	At input voltages > 200Vac

chanhvinh.com

Specifications

Model		HWS3000G-24	HWS3000G-48	HWS3000G-60	HWS3000G-130
Output					
Switching Frequency	kHz	Primary: 120, secondary: 240			
Line Regulation	mV	24V: 96, 48V: 192, 60V: 240, 130V: 520			
Load Regulation	mV	24V: 192, 48V: 384, 60V: 480, 130V: 1040			
Ripple & Noise	mV	24V: 300, 48V: 400, 60V: 500, 130V: 866			
Standby Voltage	-	5V 2A			
Series Operation	-	See Instruction Manual			
Parallel Operation	-	Up to ten units, see the Instruction Manual			
External Load Capacitance	uF	Not applicable			
Temperature Coefficient	%/°C	±0.02			
Minimum Load	-	No minimum load required			
Overcurrent Protection (85 - 132Vac)(2)	A	24V: 65.6<, 48V: 32.8<, 60V: 26.2<, 130V: 12.1<			
Overcurrent Protection (170 - 265Vac)(2)	A	24V: 131.2<, 48V: 65.7<, 60V: 52.5<, 130V: 24.3<			
Overvoltage Protection	V	24V: 30.4 - 31.5, 48V: 56.1 - 58.1, 60V: 70.2 - 72.6, 130V: 165.1 - 170.3			
Remote Sense	-	0.3V compensation			
Remote On/Off	-	Yes, see Instruction Manual			
Signals	-	AC Fail, Voltage and Current Good, Fan Fail (Open collector)			
Output (Constant Current Mode)					
Line Regulation (85 - 132Vac)	mA	24V: 250, 48V: 125.2, 60V: 100, 130V: 46.4			
Line Regulation (170 - 265Vac)	mA	24V: 500, 48V: 250.4, 60V: 200, 130V: 92.8			
Load Regulation (85 - 132Vac)	mA	24V: 500, 48V: 250.4, 60V: 200, 130V: 92.8			
Load Regulation (170 - 265Vac)	mA	24V: 1000, 48V: 500.8, 60V: 400, 130V: 185.6			
Programing and monitoring					
Communication Interface	-	Modbus RTU (RS-485): Controls output voltage and current, product status (including product life) Operational history - OCP, OVP, AC Fail, etc.			
Output Voltage Monitor using VB terminal	-	Output Voltage : 0% - Nominal output voltage, VB terminal voltage : 1 - 5V			
Output Current Monitor using CB terminal	-	85Vac<Vin<132Vac: Output Current : 0% - Maximum, CB terminal voltage : 1 - 3V 170Vac<Vin<265Vac: Output Current : 0% - Maximum, CB terminal voltage : 1 - 5V			
Output Current Ext. Control Using CC Terminal	-	85Vac<Vin<132Vac: Apply external voltage or current (1 - 3V or 4 - 12mA). Output Current: 0% - Max.			
Output Current Ext. Control Using Modbus RTU	-	85Vac<Vin<132Vac: 0 - 2,000. Output Current: 0% - Max.			
Output Current Ext. Control Using CC Terminal	-	170Vac<Vin<265Vac: Apply external voltage or current (1 - 5V or 4 - 20mA). Output Current: 0% - Max.			
Output Current Ext. Control Using Modbus RTU	-	170Vac<Vin<265Vac: 0 - 4,000. Output Current: 0% - Max.			
Environmental					
Operating Temperature (-40°C start-up)	°C	-20 to +70, derate output current linearly to 50% load from 50 to 70			
Storage Temperature	°C	-40 to +85			
Humidity (non condensing)	%RH	Operating: 20 - 90, Storage: 10 - 95			
Cooling	-	Variable speed fan, air exits across rear. Fan noise is 45dB (typ) at 25°C and 70% load			
Altitude	m	5,000. Operating, transportation and storage. IEC/EN62477-1 (OVC III, 2,000m altitude)			
Withstand Voltage (For 1 minute)	Vac	Input to Ground 2,000, Input to Output 3,000, Output to Ground 1,500			
Isolation Resistance	MΩ	>100 at 25°C, 70%RH & 500Vdc			
Vibration (Non Operating)	-	10-55Hz (1 min sweep). Maximum 19.6m/s^2, 1 hour each			
Shock	-	<196m/s^2			
Other					
Weight (Typ)	g	2,300			
Size (LxWxH)	mm	270 x 150 x 61			
Size (LxWxH)	Inches	10.63 x 5.91 x 2.4			
Connectors	-	Input/Output: Screw terminals, Output connector is user configurable for vertical or horizontal orientation			
MTBF - Telcordia SR-332*	Hours	25°C: 867,161, 40°C: 522,715			
Warranty	yrs	7(1)			

Notes:
See website for detailed specifications, test methods and Instruction Manual
Specification parameters apply at 25°C ambient temperature unless otherwise stated.
(1) The Americas and EMEA regions: 7 years. Other regions: 5 years. See applicable regional terms of sale.
(2) Constant current with automatic recovery. If the overload lasts more than 30s, the output will shutdown
* 24V 125A, 230Vac input
Link to GUI
Link to Communication manual

chanhvinh.com

Outline Drawing

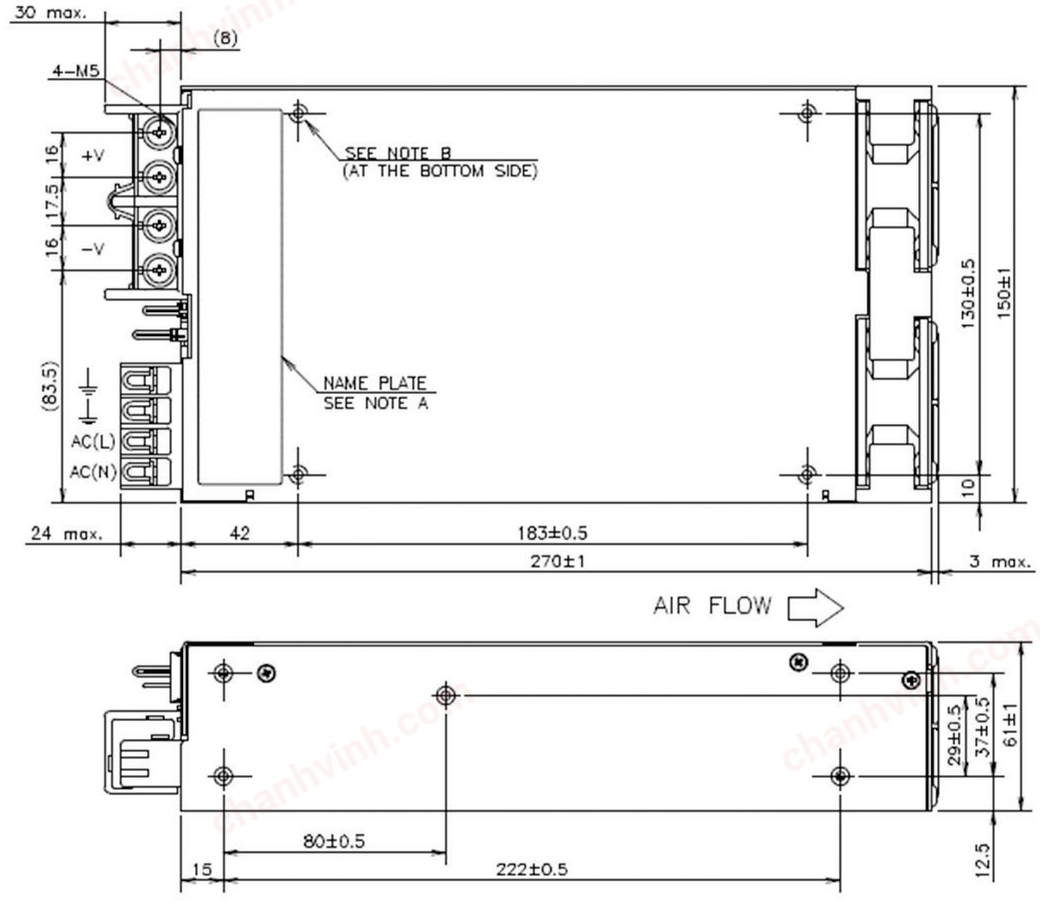

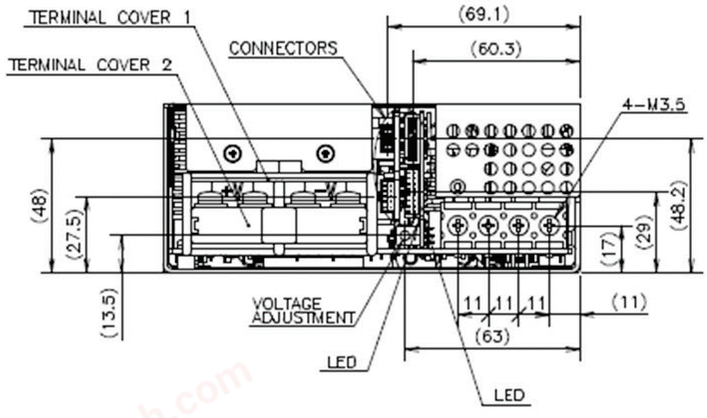

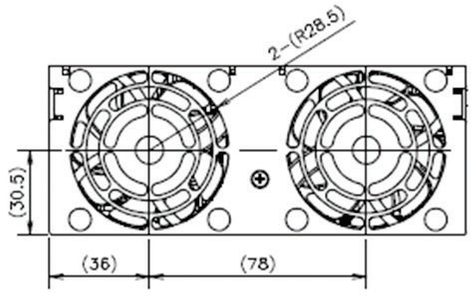

== NOTES ==

A : MODEL NAME, INPUT VOLTAGE RANGE, NOMINAL OUTPUT VOLTAGE, MAXIMUM OUTPUT CURRENT, COUNTRY OF MANUFACTURE AND SAFETY MARKING (FOR ONLY APPROVED PRODUCTS) ARE SHOWN HERE IN ACCORDANCE WITH THE SPECIFICATIONS.

B : 9-M4 BR & COUNTERSINK ARE FOR CUSTOMER'S CHASSIS MOUNTING. (SCREW PENETRATION DEPTH 6mm MAX.)

== ACCESSORIES ==

* TERMINAL COVER 1 ----------1
(ATTACHED ON TERMINAL AT SHIPMENT)
* TERMINAL COVER 2 ----------1
(ATTACHED ON TERMINAL AT SHIPMENT)
* SHORT PIECE 1 ----------1
SHORTING -R — AG
(ATTACHED ON CN41 AT SHIPMENT)
* SHORT PIECE 2 ----------1
SHORTING +L — +S, -L — -S
(ATTACHED ON CN61 AT SHIPMENT)

chanhvinh.com

TDK-Lambda France SAS
Tel: +33 1 60 12 71 65
tlf.fr-powersolutions@tdk.com
www.emea.lambda.tdk.com/fr

Italy Sales Office
Tel: +39 02 61 29 38 63
tlf.it-powersolutions@tdk.com
www.emea.lambda.tdk.com/it

Netherlands
tlf.nl-powersolutions@tdk.com
www.emea.lambda.tdk.com/nl

TDK-Lambda Germany GmbH
Tel: +49 7841 666 0
tlg.powersolutions@tdk.com
www.emea.lambda.tdk.com/de

Austria Sales Office
Tel: +43 2256 655 84
tlg.at-powersolutions@tdk.com
www.emea.lambda.tdk.com/at

Switzerland Sales Office
Tel: +41 44 850 53 53
tlg.ch-powersolutions@tdk.com
www.emea.lambda.tdk.com/ch

Nordic Sales Office
Tel: +45 8853 8086
tlg.dk-powersolutions@tdk.com
www.emea.lambda.tdk.com/dk

TDK-Lambda UK Ltd.
Tel: +44 (0) 12 71 85 66 66
tlu.powersolutions@tdk.com
www.emea.lambda.tdk.com/uk

TDK-Lambda Ltd.
Tel: +9 723 902 4333
tli.powersolutions@tdk.com
www.emea.lambda.tdk.com/il-en

TDK-Lambda Americas
Tel: +1 800-LAMBDA-4 or 1-800-526-2324
tla.powersolutions@tdk.com
www.us.lambda.tdk.com

TDK Electronics do Brasil Ltda
Tel: +55 11 3289-9599
sales.br@tdk-electronics.tdk.com
www.tdk-electronics.tdk.com/en

TDK-Lambda Corporation
Tel: +81-3-6778-1113
www.jp.lambda.tdk.com

TDK-Lambda (China) Electronics Co. Ltd.
Tel: +86 21 6485-0777
tlc.powersolutions@tdk.com
www.lambda.tdk.com.cn

TDK-Lambda Singapore Pte Ltd.
Tel: +65 6251 7211
tls.marketing@tdk.com
www.sg.lambda.tdk.com

TDK India Private Limited, Power Supply Division
Tel: +91 80 4039-0660
mathew.philip@tdk.com
www.sg.lambda.tdk.com