chanhvinh.com

TDK·Lambda CUS30M & CUS60M Series

Single Output 30 to 60W Medical & ITE Power Supplies

https://product.tdk.com/en/power/cus-m
www.emea.lambda.tdk.com/cus30_60m

Medical Industrial Test COMM Broadcast



The CUS30M and CUS60M are 2" x 3" footprint AC/DC power supplies with outputs ranging from 5V to 48V. They are certified to IEC60601-1 3rd edition (medical), IEC62368-1, EN60335-1 and EN61558-1 with compliance to EN60601-1-2:2015 Edition 4 immunity requirements. Rated at 30W and 60W, these compact products meet class B conducted and radiated EMI in either a Class I or Class II (double insulated) construction, without the need for external filtering.

Features	Benefits
• 30 to 60W Convection Cooled	• Quiet Operation
• Medical Certification (2 x MoPP)	• Suitable for B and BF Rated Equipment
• Class B Conducted and Radiated EMI	• Easier System Compliance
• Suitable for Class I and II Installations	• Flexible Utilisation
• Compact 2" x 3" Footprint	• Space Saving in End Equipment
• Enclosure, Mounting and Connection Options	• Versatile Application

Model Selector

Model	Output Voltage (V)	Maximum Current (A)	Maximum Power (W)	Load Reg (mV)	Line Reg (mV)	Ripple Noise (mV) (1)	Efficiency (typ) % (2)	Average Active Efficiency (typ) % (2)
CUS60M-5	5	6	30	100	20	120	81 / 81	81 / 79.5
CUS30M-12	12	2.5	30	120	48	120	87 / 88	87 / 87
CUS60M-12	12	5	60	120	48	120	87 / 88	87 / 86
CUS30M-15	15	2	30	120	60	150	87 / 88	87 / 87
CUS60M-15	15	4	60	120	60	150	87.5 / 87	87 / 86.5
CUS30M-18	18	1.7	30.6	144	72	150	87 / 88	87 / 87
CUS60M-18	18	3.35	60.3	144	72	150	88 / 88	87 / 87
CUS30M-24	24	1.25	30	192	96	150	88 / 90	87 / 87
CUS60M-24	24	2.5	60	192	96	150	89 / 90	88 / 87
CUS30M-36	36	0.84	30.24	288	144	200	88 / 90	88 / 89
CUS30M-48	48	0.63	30.24	384	192	200	88 / 90	88 / 89
CUS60M-48	48	1.25	60	384	192	200	90 / 91	90 / 89

Options

Suffix	Description
Blank	Open frame, JST connectors
/A	Cover, JST connectors. See website for derating
/CO	Open frame, JST connectors, pcb coating
/M	Open frame, Molex 5195-03 & -04 mating connectors
/P	Open frame, JST connectors, Pcb mount
/SF	Open frame, JST connectors, single fuse, (Line only)

Option combinations are available, please contact your local sales office

chanhvinh.com

Specifications

Model		CUS30M	CUS60M
Input			
Input Voltage range	Vac	85 - 264 [3]	
Input Frequency	Hz	47 - 63	
Input Current (110/230VAC)	A	0.6 / 0.4	5V: 0.7 / 0.5, 12-48V: 1.2 / 0.8
Inrush Current (Typical, Cold Start)	A	30 at 115Vac, 60 at 230Vac	
Leakage Current	mA	<0.25 at 265Vac, 60Hz	<0.2 at 265Vac, 60Hz
Touch Current	uA	100 at 265Vac, 60Hz	60 at 265Vac, 60Hz
Harmonic Compliance	-	Meets EN61000-3-2	
No Load Power Consumption	W	<0.3 at 265Vac	<0.5 at 265Vac
Hold Up Time (typ) at 115VAC Input	ms	20 / 100	
Efficiency	-	See model selector	
Average Efficiency		See model selector. Measured at 25%, 50%, 75% and 100% load conditions	
Conducted & Radiated EMI	-	EN55011-B, EN55032-B, FCC Class B	
Immunity	-	IEC61000-4-2, IEC60601-1-2 Ed4. See immunity table	
Insulation Class	-	Construction suitable for Class I or Class II installation	
Safety Certifications and Markings	-	EN/IEC/UL/ES/CSA60601-1, EN/IEC/UL/CSA62368-1, 60950-1, EN61558-1, EN60335-1, CE Mark and UKCA Mark. The CUS60M and CUS30M series are also designed to meet IEC61010-1.	

Immunity

Test	Standard	Test Level	Criteria	Notes
ESD	EN61000-4-2	3 & 4	A	Level 4 contact discharge only
Radiated Susceptibility	EN61000-4-3	3	A	-
Electrical Fast Transient Burst	EN61000-4-4	3	A	-
Surge	EN61000-4-5	3 & 4	A	Level 4 common mode only
Conducted Susceptibility	EN61000-4-6	3	A	-
Magnetic fields	EN61000-4-8	4	A	-
Voltage Dips	EN61000-4-11	Class 3	B	100 - 120VAC
			A	200 - 240VAC
Short Interruptions	EN61000-4-11	Class 3	B	-
Voltage Dips	EN60601-1-2:2015	Class 2	B	100 - 120VAC
			A	200 - 240VAC
Short Interruptions	EN60601-1-2:2015	Class 2	B	-
SEMI F47 Line Dip	SEMI F47	-	-	At input voltages > 200VAC

chanhvinh.com

Specifications

Model		CUS30M	CUS60M
Output			
Line Regulation	mV	See model selector	
Load Regulation	mV	See model selector	
Ripple & Noise	mV	See model selector	
Temperature Coefficient	%/°C	<0.02%/°C	
Minimum Load	-	No minimum load required	
Overcurrent Protection	A	>105% of rated current. Class 2 Limited Power Source (4)	
Overvoltage Protection (5)	V	> 115% of nominal output	>120% of nominal output
Remote Sense	-	No	
Indicators	-	None	
Parallel Operation	-	Not possible	
Environmental			
Operating Temperature (-30°C start-up)	°C	-20 to +70°C. Derate linearly to 50% load from +50 to +70°C (6)	
Storage Temperature	°C	-40° to +85°C	
Humidity (non condensing)	%RH	10 - 90%RH (Operating & Storage)	
Cooling	-	Convection	
Altitude	m	5,000m, derate operating ambient by 5°C/1000m above 3,000m	
Withstand Voltage (For 1 minute)	VAC	Input to Ground 2kVAC (1xMOPP), Input to Output 4kVAC (2xMOPPs), Output to Ground 1.5kVAC (1xMOPP) suitable for B & BF rated equipment	
Isolation Resistance	MΩ	>100MΩ at 25°C, 70%RH & 500VDC Output to Ground	
Vibration (Non Operating)	-	10 - 500Hz: 19.6m/s^2 constant sweep 1 min X, Y, Z for 1 hour	
Shock	-	< 196.1 m/s^2	
Other			
Weight (Typ)	g	62	120
Size (LxWxH)	mm	76.2 x 50.8 x 24.2	76.2 x 50.8 x 26.7
Size (LxWxH)	Inches	3 x 2 x 0.95	3 x 2 x 1.05
Connectors (JST)	-	Input (CN1): B2P3-VH(LF)(SN) (Mates with VHR-3N housing). Output (CN-51): B4P-VH(LF)(SN) (Mates with VHR-4N)	
MTBF - Telcordia SR-332 issue 3 (7)	Hours	9,960,323	7,084,410
Warranty	yrs	3 years	

Notes
See website for detailed specifications, test methods and installation manual
See installation manual for terminal pin and hand tool information
(1) Ripple level increases at light loading to meet new efficiency standards
(2) 115/230VAC. Average efficiency measured at 25, 50, 75 and 100% load
(3) CUS30M: Derate linearly to 80% load from 115VAC to 85VAC. CUS60M-12, 18 & 48: Derate linearly to 80% load from 100VAC to 85VAC. CUS60M-15 derate linearly to 60% load from 100Vac
(4) All models except CUS60M-5
(5) Shutdown Cycle AC input to reset
(6) CUS30M-18, 48 and CUS60M-12: Derate linearly to 50% load from +45 to +70oC. CUS60M-15: 50% load from +40 to +70oC. Models with /A cover have additional derating, see website.
(7) 24V output model, 25°C ambient, full load, 230VAC input

chanhvinh.com

Outline Drawing CUS30M Series (Open Frame)

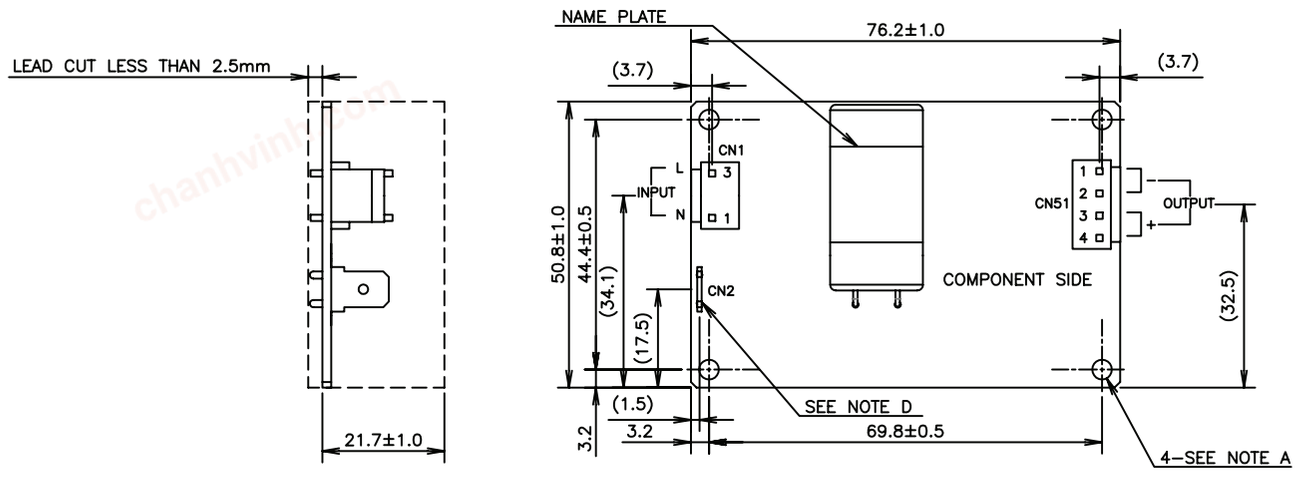

To view the complete outline drawing please visit https://product.tdk.com/info/en/documents/2doutline_pdf/ac-dc-converter/cus30m_out.pdf

Outline Drawing CUS60M Series (Open Frame)

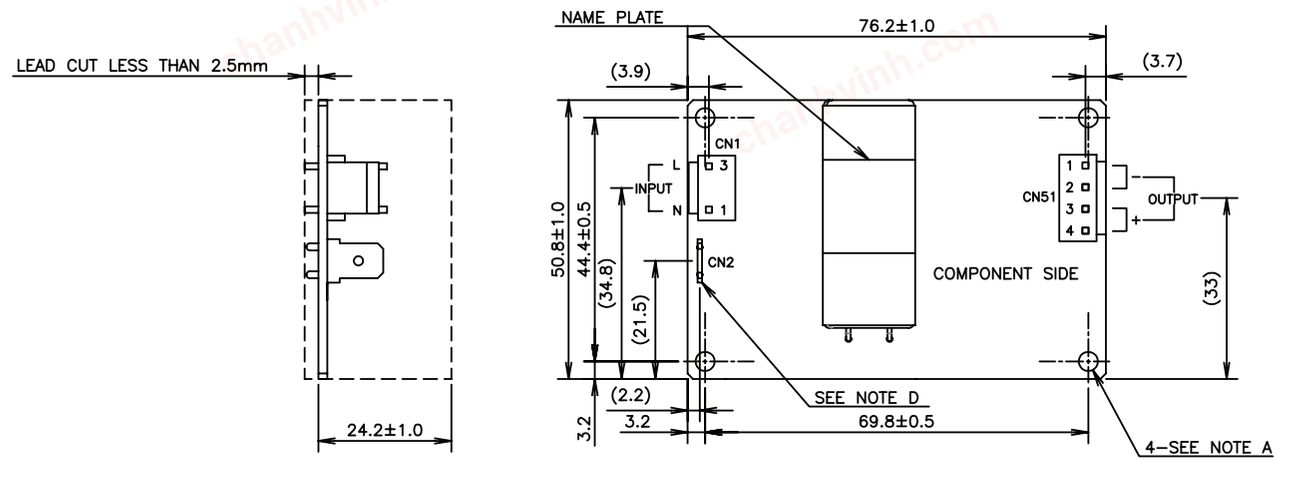

To view the complete outline drawing please visit https://product.tdk.com/info/en/documents/2doutline_pdf/ac-dc-converter/cus60m_out.pdf

chanhvinh.com

Outline Drawing CUS30M Series (Enclosed /A)

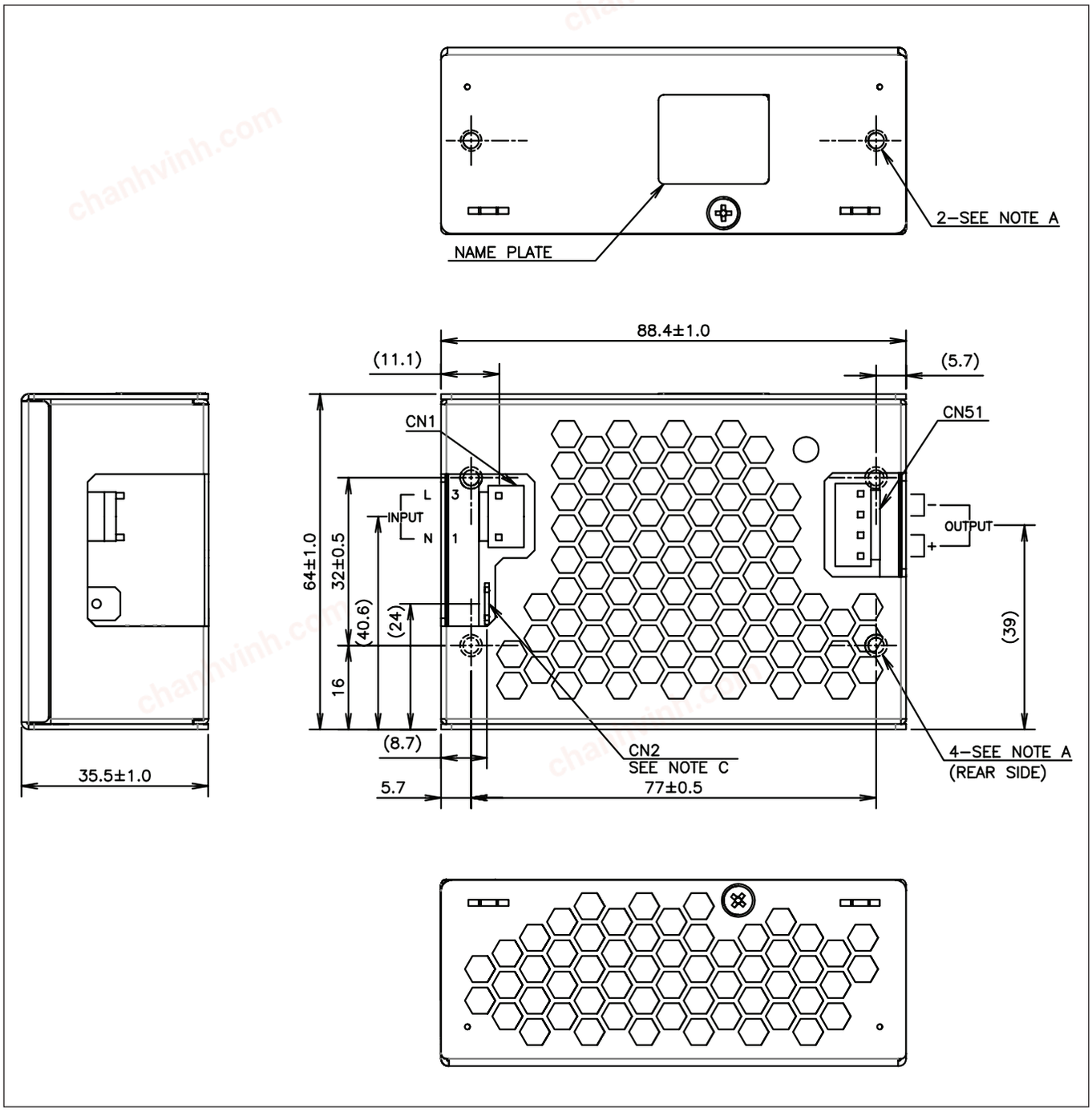

To view the complete outline drawing please visit https://product.tdk.com/info/en/documents/2doutline_pdf/ac-dc-converter/cus30m_a_out.pdf

chanhvinh.com

Outline Drawing CUS60M Series (Enclosed /A)

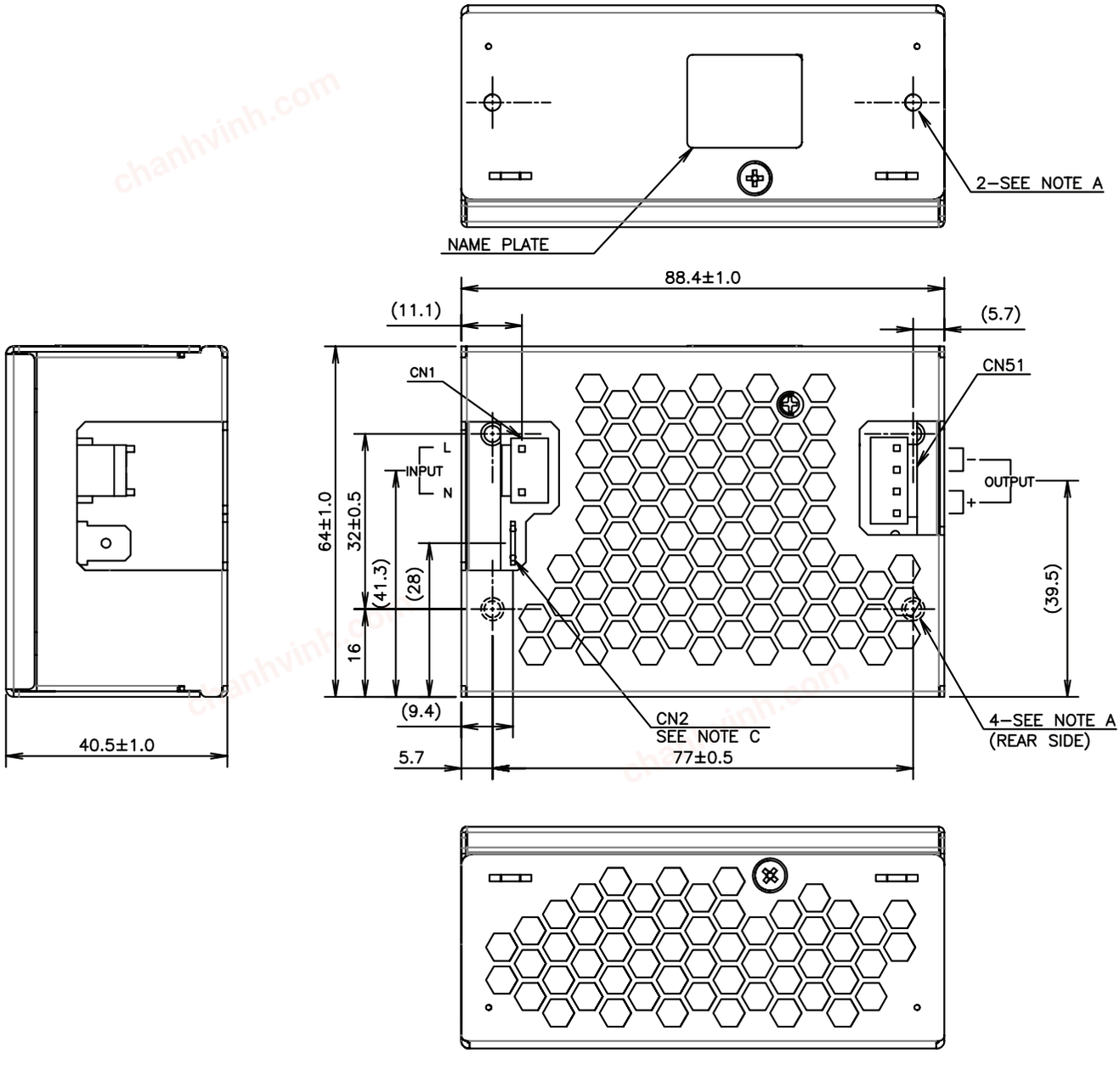

To view the complete outline drawing please visit https://product.tdk.com/info/en/documents/2doutline_pdf/ac-dc-converter/cus60m_a_out.pdf

chanhvinh.com

Outline Drawing CUS30M Series (PCB Mount /P)

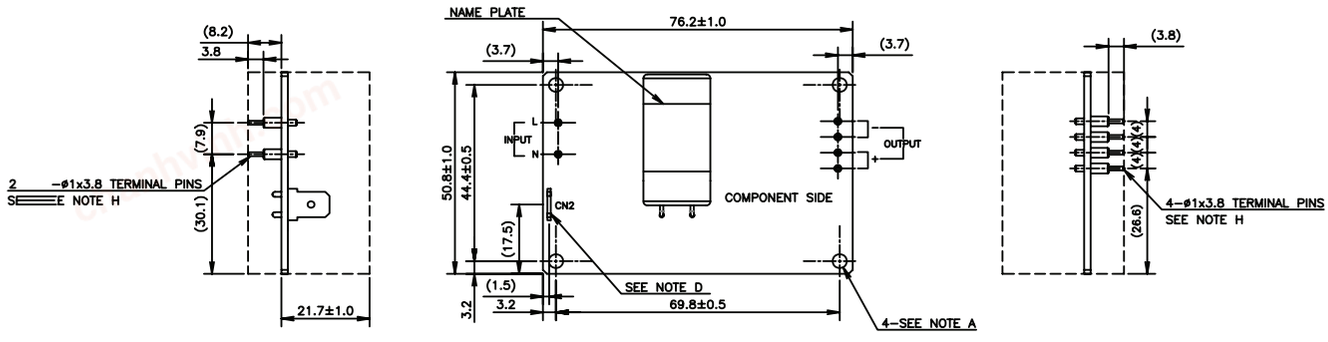

To view the complete outline drawing please visit https://product.tdk.com/info/en/documents/2doutline_pdf/ac-dc-converter/cus30m_p_out.pdf

Outline Drawing CUS60M Series (PCB Mount /P)

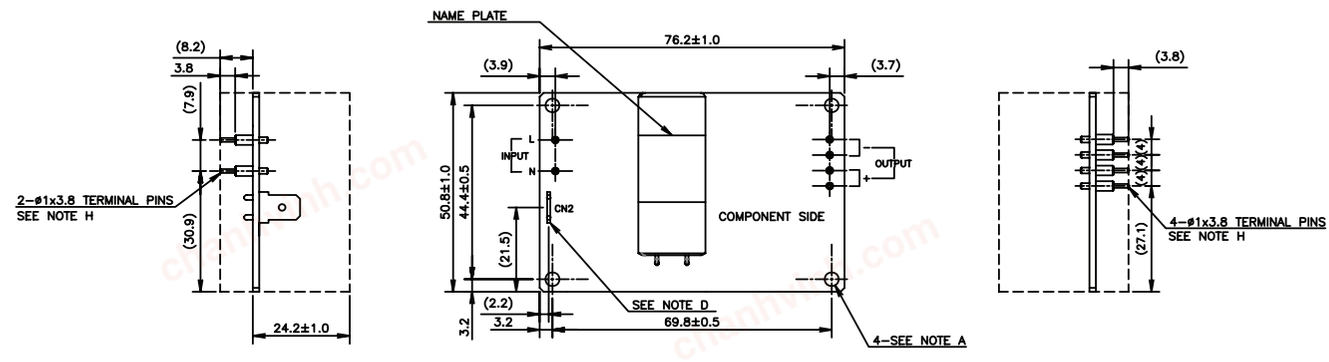

To view the complete outline drawing please visit https://product.tdk.com/info/en/documents/2doutline_pdf/ac-dc-converter/cus60m_p_out.pdf

Outline Drawing CUS30M Series (Molex /M)

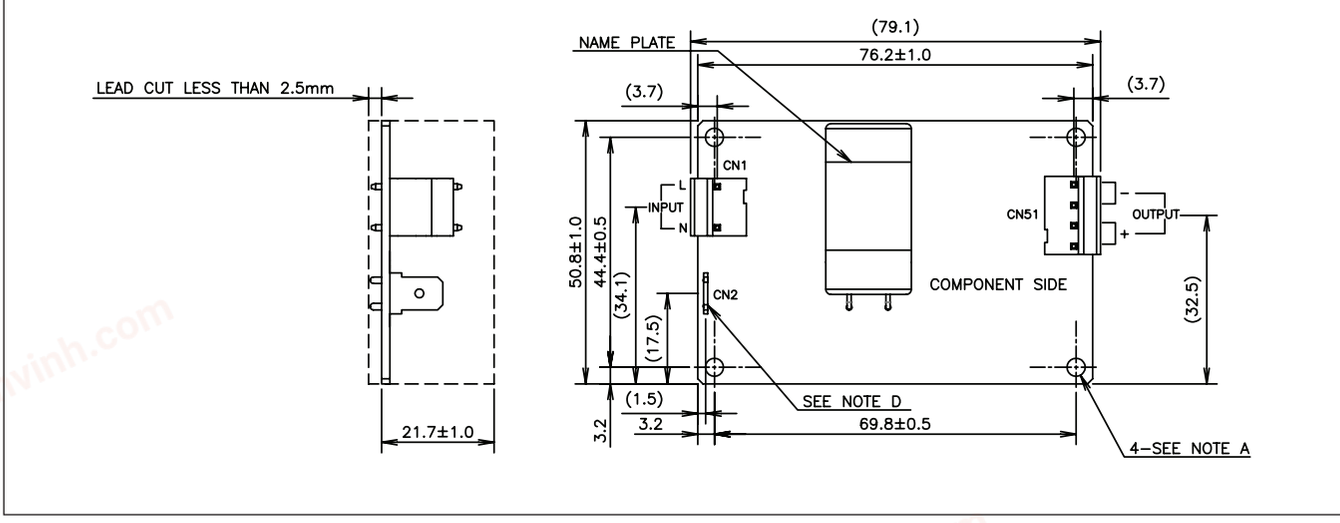

To view the complete outline drawing please visit https://product.tdk.com/info/en/documents/2doutline_pdf/ac-dc-converter/cus30m_m_out.pdf

chanhvinh.com

Outline Drawing CUS60M Series (Molex /M)

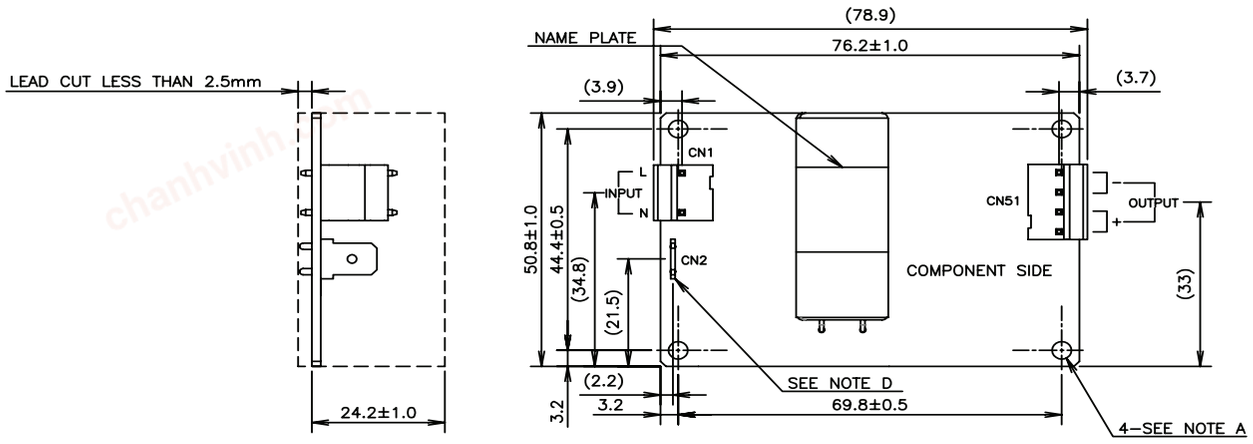

To view the complete outline drawing please visit https://product.tdk.com/info/en/documents/2doutline_pdf/ac-dc-converter/cus60m_m_out.pdf

chanhvinh.com

TDK·Lambda

Trusted • Innovative • Reliable



TDK-Lambda France SAS
Tel: +33 1 60 12 71 65
tlf.fr-powersolutions@tdk.com
www.emea.lambda.tdk.com/fr



Italy Sales Office
Tel +39 02 61 29 38 63
tlf.it-powersolutions@tdk.com
www.emea.lambda.tdk.com/it



Netherlands
tlf.nl-powersolutions@tdk.com
www.emea.lambda.tdk.com/nl



TDK-Lambda Europe GmbH
Tel: +49 7841 666 0
tlg.powersolutions@tdk.com
www.emea.lambda.tdk.com/de



Austria Sales Office
Tel: +43 2256 655 84
tlg.at-powersolutions@tdk.com
www.emea.lambda.tdk.com/at



Switzerland Sales Office
Tel: +41 44 850 53 53
tlg.ch-powersolutions@tdk.com
www.emea.lambda.tdk.com/ch



TDK-Lambda Europ GmbH
Tel: +45 8853 8086
tlg.dk-powersolutions@tdk.com
www.emea.lambda.tdk.com/dk

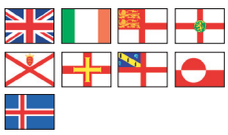

TDK-Lambda UK Ltd.
Tel: +44 (0) 12 71 85 66 66
tlu.powersolutions@tdk.com
www.emea.lambda.tdk.com/uk



TDK-Lambda Ltd.
Tel: +9 723 902 4333
tli.powersolutions@tdk.com
www.emea.lambda.tdk.com/il-en



TDK-Lambda Americas
Tel: +1 800-LAMBDA-4 or 1-800-526-2324
tla.powersolutions@tdk.com
www.us.lambda.tdk.com



TDK Electronics do Brasil Ltda
Tel: +55 11 3289-9599
sales.br@tdk-electronics.tdk.com
www.tdk-electronics.tdk.com/en



TDK-Lambda Corporation
Tel: +81-3-6778-1113
www.jp.lambda.tdk.com



TDK-Lambda (China) Electronics Co. Ltd.
Tel: +86 21 6485-0777
tlc.powersolutions@tdk.com
www.lambda.tdk.com.cn



TDK-Lambda Singapore Pte Ltd.
Tel: +65 6251 7211
tls.marketing@tdk.com
www.sg.lambda.tdk.com



TDK India Private Limited, Power Supply Division
Tel: +91 80 4039-0660
mathew.philip@tdk.com
www.sg.lambda.tdk.com

chanhvinh.com