chanhvinh.com

TDK·Lambda

CUS150M Series

www.emea.tdk-lambda.com/cus150m

2 x 4” 150W AC-DC Power Supplies

Medical Industrial Test LED Broadcast



Features	Benefits
• Compact 2x4 inch Footprint	• Space Saving in End Equipment
• Medical Approval with 2 x MoPP Isolation	• Suitable for B and BF Type Medical Equipment
• Suitable for Class I and Class II (no earth) Installations	• Flexible Utilisation
• 150W Convection Cooled Rating (for U channel)	• Quiet Operation
• Class B Conducted and Radiated EMI	• Easier System EMC Compliance
• Options for U channel, Cover, Baseplate and Top Fan	• Versatile Application
• Operation up to 85°C	• Suitable for High Ambient Temperature Environments

Specification

Model		CUS150M
Input Voltage range **(1) (2)**	-	85 - 264VAC (47 - 63Hz)
Inrush Current (Cold start at 230VAC input)	A	<65A
Input Current (150W load)	A	2.2A (at 100VAC)
Hold Up Time	ms	>18ms
Harmonic Compliance	-	EN/IEC61000-3-2 Class A, Class C >120W. Minimum PF 0.98/0.92 (115/230Vac, 100% load)
Leakage Current	µA	<250µA at 230VAC 63Hz
Touch Current (enclosure leakage)	µA	<100µA
Temperature Coefficient	%/°C	±0.02%/°C
No Load Power Consumption at 230VAC input	W	<0.5W
Fan Supply	-	10 - 12V (see model selector), 0.5A, +14/-6% regulation
Ripple & Noise	mV (pk-pk)	<1% of nominal output for operating temperatures above 0°C At -20°C: 12V model <4%, 15V & 18V model <3%, other models <2%
Load Regulation	mV	≤1% (0 - 100% load)
Line Regulation	mV	≤0.5% (90 - 264VAC)
Short Circuit & Overcurrent Protection	-	110 - 170%. Hiccup mode, automatic recovery
Overvoltage Protection	V	115-140% of standard output voltage for each model, 48V model max 60V. Latching (unit shutdown), cycle AC input to reset
Efficiency	%	Up to 94%
Active Average Efficiency	%	>91%
Operating Temperature	°C	-20°C to +85°C (70°C maximum for fan version /F), see derating curves for operation above +50°C
Storage Temperature	°C	-40°C to +85°C (70°C maximum for fan version /F)
Operational Altitude	m	5000
Humidity (non condensing)	%RH	5 - 95 (15 - 90 for /F option), operational and non operational
Cooling	-	See rating curves for convection and forced air
Withstand Voltage	VAC	Input to Ground 1.5kVAC (1xMOPP), Input to Output 4kVAC (2xMOPP), Output to Ground 1.5kVAC (1xMOPP)
Isolation Resistance	Ω	>100MΩ at 25°C & 70%RH
Insulation Class	-	Construction suitable for Class I or Class II installation
Vibration (non operating)	-	2G, 10-500Hz for 1 hour
Shock (non operating)	-	30G, 11ms half sine
Safety Agency Certifications **(3)**	-	IEC/EN/UL60950-1 and 60601-1. ES60601-1. IEC/EN/UL62368-1 Designed to meet IEC61010-1
Conducted & Radiated EMI	-	EN55011 / EN55032 Class B (see application notes for conditions)
Immunity	-	Compliant with EN60601-1-2;2015 (Ed4), see immunity table on page 3
Weight	g	185 (open PCB version)
Size (WxLxH)	mm	50.8 x 101.6 x 31.5 (open PCB version)
Warranty	yrs	5
Connectors	-	Input: JST B2P3-VH, Output: JST B6P-VH, Fan: Molex 22-04-1021

Notes: (1) For operation at 440Hz please consult Technical Sales. **(2)** Derate linearly to 90% load from 90 to 85VAC input
(3) EN60335-1 Compliant versions available subject to MOQ. Please contact Sales. ***Specification parameters apply at 25°C ambient temperature unless otherwise stated.***

chanhvinh.com

TDK·Lambda

Model Selector

Model	Nominal Output Voltage (V)	Fan Supply Voltage (V)	Maximum (1) Current Convection (A)	Maximum Current (Forced Air)	Maximum (1) Power Convection (W)	Maximum Power Forced Air (W)
CUS150M-12	12	11.6	10.00	12.50	120	150
CUS150M-12/U	12	11.6	12.50	12.50	150	150
CUS150M-12/A	12	11.6	12.50	12.50	150	150
CUS150M-12/B	12	11.6	12.50	12.50	150	150
CUS150M-12/F	12	11.6	12.50	n/a	150	n/a
CUS150M-15	15	9.8	8.00	10.00	120	150
CUS150M-15/U	15	9.8	10.00	10.00	150	150
CUS150M-15/A	15	9.8	10.00	10.00	150	150
CUS150M-15/B	15	9.8	10.00	10.00	150	150
CUS150M-15/F	15	9.8	10.00	n/a	150	n/a
CUS150M-18	18	11.6	6.66	8.33	120	150
CUS150M-18/U	18	11.6	8.33	8.33	150	150
CUS150M-18/A	18	11.6	8.33	8.33	150	150
CUS150M-18/B	18	11.6	8.33	8.33	150	150
CUS150M-18/F	18	11.6	8.33	n/a	150	n/a
CUS150M-24	24	11.6	5.00	6.25	120	150
CUS150M-24/U	24	11.6	6.25	6.25	150	150
CUS150M-24/A	24	11.6	6.25	6.25	150	150
CUS150M-24/B	24	11.6	6.25	6.25	150	150
CUS150M-24/F	24	11.6	6.25	n/a	150	n/a
CUS150M-28	28	10.8	4.28	5.36	120	150
CUS150M-28/U	28	10.8	5.36	5.36	150	150
CUS150M-28/A	28	10.8	5.36	5.36	150	150
CUS150M-28/B	28	10.8	5.36	5.36	150	150
CUS150M-28/F	28	10.8	5.36	n/a	150	n/a
CUS150M-36	36	11.6	3.33	4.16	120	150
CUS150M-36/U	36	11.6	4.16	4.16	150	150
CUS150M-36/A	36	11.6	4.16	4.16	150	150
CUS150M-36/B	36	11.6	4.16	4.16	150	150
CUS150M-36/F	36	11.6	4.16	n/a	150	n/a
CUS150M-48	48	11.6	2.50	3.12	120	150
CUS150M-48/U	48	11.6	3.12	3.12	150	150
CUS150M-48/A	48	11.6	3.12	3.12	150	150
CUS150M-48/B	48	11.6	3.12	3.12	150	150
CUS150M-48/F	48	11.6	3.12	n/a	150	n/a

Note:(1) Please see rating curves for ambient temperature.

Output voltage is factory set and not user adjustable
Non-standard outputs can be requested within the following ranges (not for /F version);

Model	CUS150M-12	CUS150M-15	CUS150M-18	CUS150M-24	CUS150M-28	CUS150M-36	CUS150M-48
Voltage Range	12 - 13.2	15 -16.5	18 -19.8	24 - 26.4	28 -30.8	36 - 39.6	48 - 50

Non-standard output versions may be subject to minimum order quantities and variations to specification. For all non-standard output voltage settings please consult Sales.

Part Numbering Scheme

CUS150M- 12 / U E M

Output voltage 12, 15, 18, 24, 28, 36, 48

blank	open pcb
U	U channel
A	U channel with cover
B	baseplate
F	U channel with cover and top mounted fan

blank	dual fuses
E	single input fuse in line line

(these options subject to MOQ, please consult Sales)

blank	JST connectors
M	Molex connectors

Examples; CUS150M-24/UE CUS150M-12V5/A

chanhvinh.com

TDK·Lambda

Immunity Levels

Test	Standard	Test Level	Criteria	Notes The power stated below is total power (main output + fan output)
ESD	EN61000-4-2	4	A	
Radiated Susceptibility	EN61000-4-3	3	A	inc proximity field requirements of EN60601-1-2:2015
Electrical Fast Transient Burst	EN61000-4-4	4	A	(AC Port, 5kHz and 100KHz)
Surge	EN61000-4-5	3	A	-
Conducted Susceptibility	EN61000-4-6	3	A	-
Magnetic fields	EN61000-4-8	4	A	-
Voltage Dips & Interruptions	EN61000-4-11 Class 3 Industrial inc EN55024 (100VAC)	0% for 1/2 cycle	A	-
		0% for 1 cycle	A/B	A up to 125W, B above 125W
		40% for 10/12 cycles	B	-
		70% for 25/30 cycles	A	-
		80% for 250/300 cycles	A	-
		0% for 250/300 cycles	B	-
	EN61000-4-11 Class 3 Industrial inc EN55024 (240VAC)	0% for 1/2 cycle	A	-
		0% for 1 cycle	A/B	A up to 125W, B above 125W
		40% for 10/12 cycles	A/B	A up to 120W, B above 120W
		70% for 25/30 cycles	A	-
		80% for 250/300 cycles	A	-
		0% for 250/300 cycles	B	-
	EN60601-1-2:2015 (100VAC)	0% for 1/2 cycle	A	-
		0% for 1 cycle	A/B	A up to 125W, B above 125W
		70% for 25/30 cycles	A	-
		0% for 250/300 cycles	B	-
	EN60601-1-2:2015 (240VAC)	0% for 1/2 cycle	A	-
		0% for 1 cycle	A/B	A up to 125W, B above 125W
		70% for 25/30 cycles	A	-
		0% for 250/300 cycles	B	-
Ringwave Test	EN61000-4-12	3	A	-
Voltage Fluctuations	EN61000-4-14	Class 3	A	-

Outline Drawing CUS150M Open Frame Unit

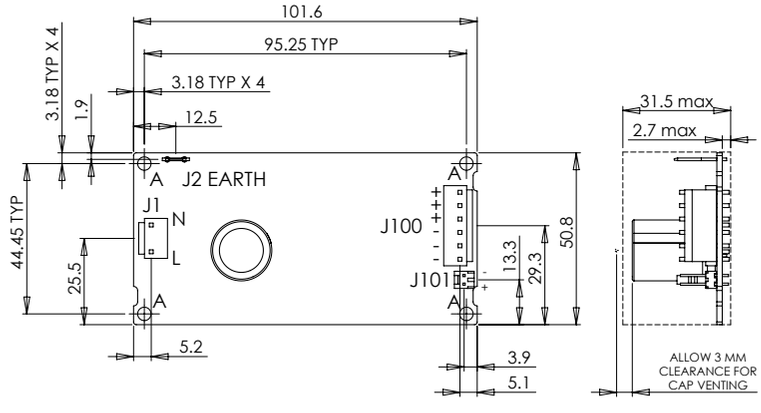

OPEN FRAME UNIT

DIMENSION TOLERANCES: 0.00 ±0.2 0.0 ±0.4

(CONNECTOR PART NUMBERS ALSO IN APPLICATION NOTE)

REF DES	MANUFACTURER	CONNECTOR TYPE	MATING HOUSING	CRIMP
J1	JST	B2P3-VH	VAR-2	20-18AWG - SVA-41T-P1.1
J1 M-option	Molex	10-63-4027	09-50-1031	08-70-1031
J2	Tyco	62490	22-18AWG - 2-520407-2 16-14AWG - 3-520408-2	22-18AWG - 2-520407-2 16-14AWG - 2-520408-2
J100	JST	B6P-VH	VHR-6N	22-18AWG - SVH-21T-P1.1 20-16AWG - SVH-41T-P1.1
J100 M-option	Molex	09-65-2068	09-50-1061	08-70-1031
J101	Molex	22-04-1021	51191-0200	Series 50802

NOTE:
A - 4 OFF FIXING HOLES ø3.96 TO ACCOMMODATE M3 SCREWS

chanhvinh.com

Outline Drawing CUS150M/U (U Channel) Option

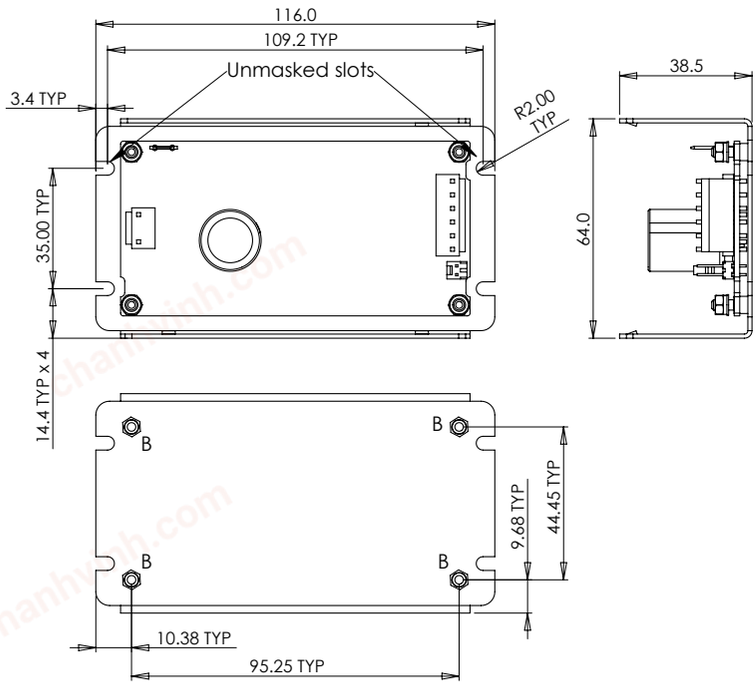

DIMENSION TOLERANCES: 0.00 ±0.2 0.0 ±0.4

NOTE: B - 4 OFF M3 FIXING - max thread penetration 4.25 mm

RECOMMENDED TORQUE - M3 - 0.5 - 0.6 Nm

Outline Drawing CUS150M/B (Baseplate) Option

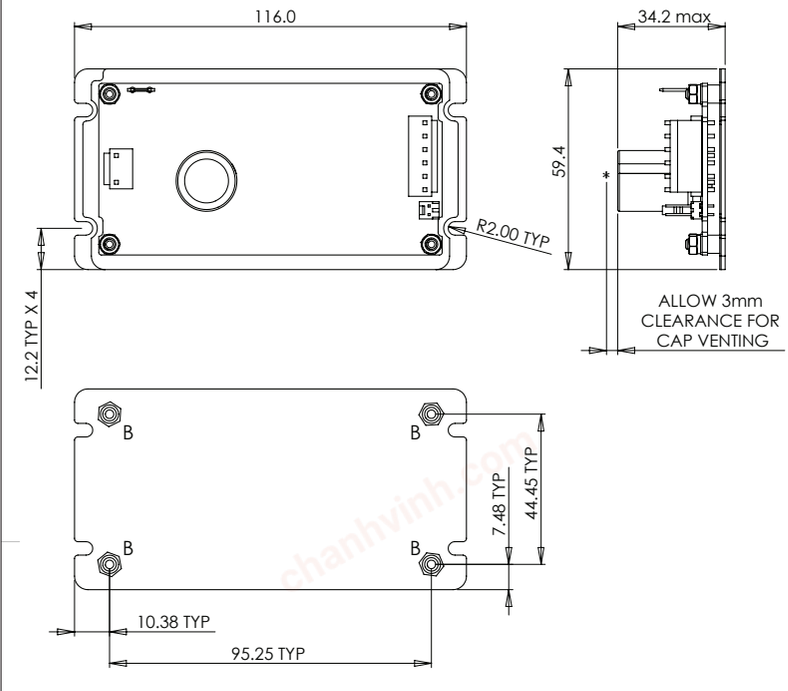

DIMENSION TOLERANCES: 0.00 ±0.2 0.0 ±0.4

NOTE: B - 4 OFF M3 FIXING - max thread penetration 4.25 mm

RECOMMENDED TORQUE - M3 - 0.5 - 0.6 Nm

chanhvinh.com

TDK·Lambda

Outline Drawing CUS150M/A (U Channel with Cover) Option

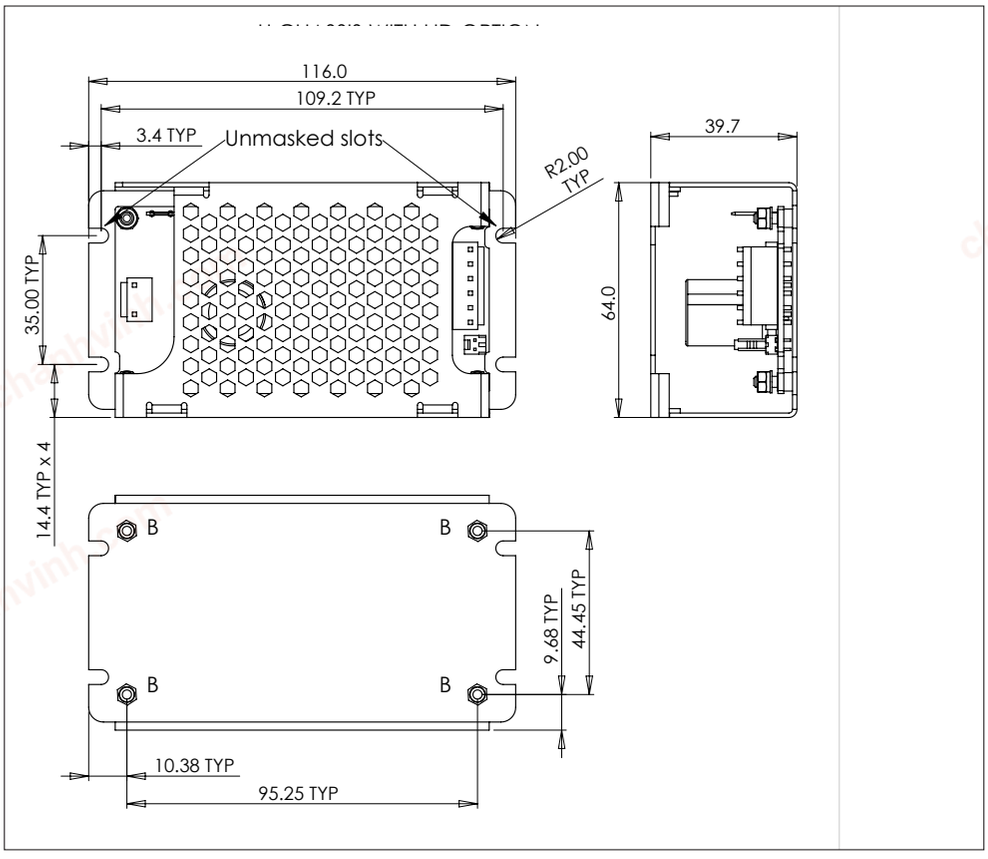

Outline Drawing CUS150M/F (U Channel with Cover & Top Mounted Fan) Option

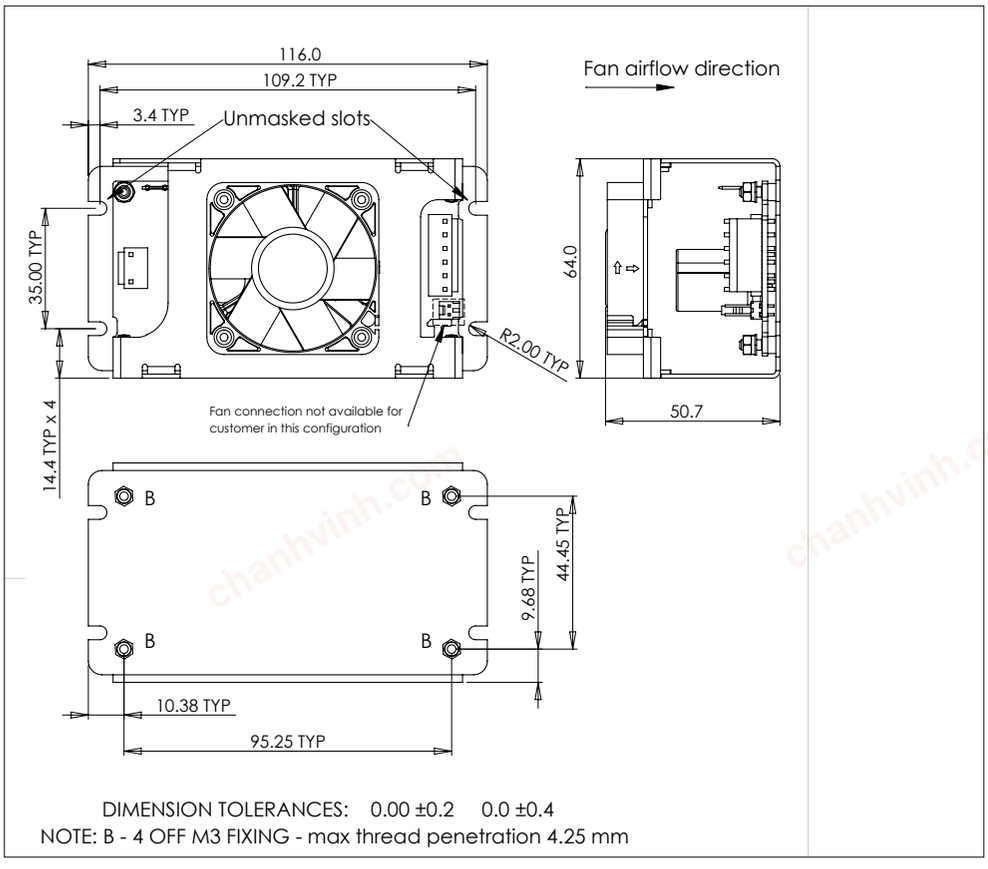

DIMENSION TOLERANCES: 0.00 ±0.2 0.0 ±0.4
NOTE: B - 4 OFF M3 FIXING - max thread penetration 4.25 mm

chanhvinh.com

Output Power vs Ambient Temperature (Open Frame & /B Units)

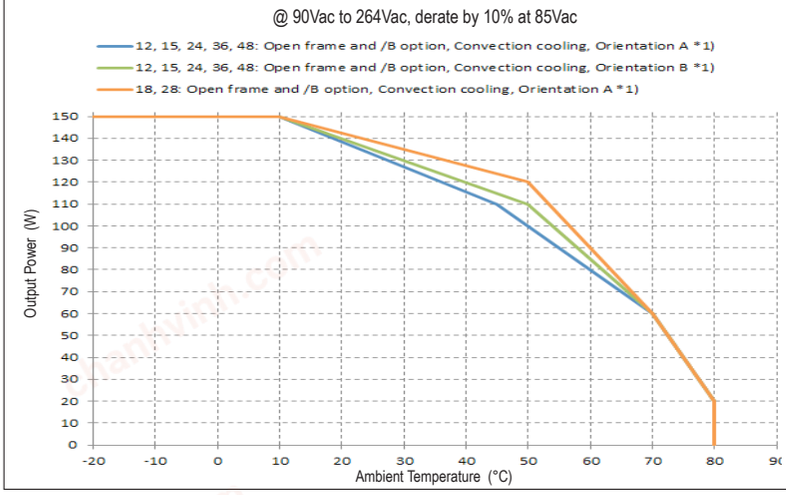

Horizontal Orientation A

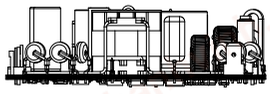

Vertical Orientation B

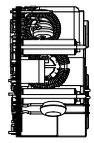

Note (*1) 50mm above surface, see instruction manual for maximum component temperatures.

Output Power vs Ambient Temperature (/U and /A versions)

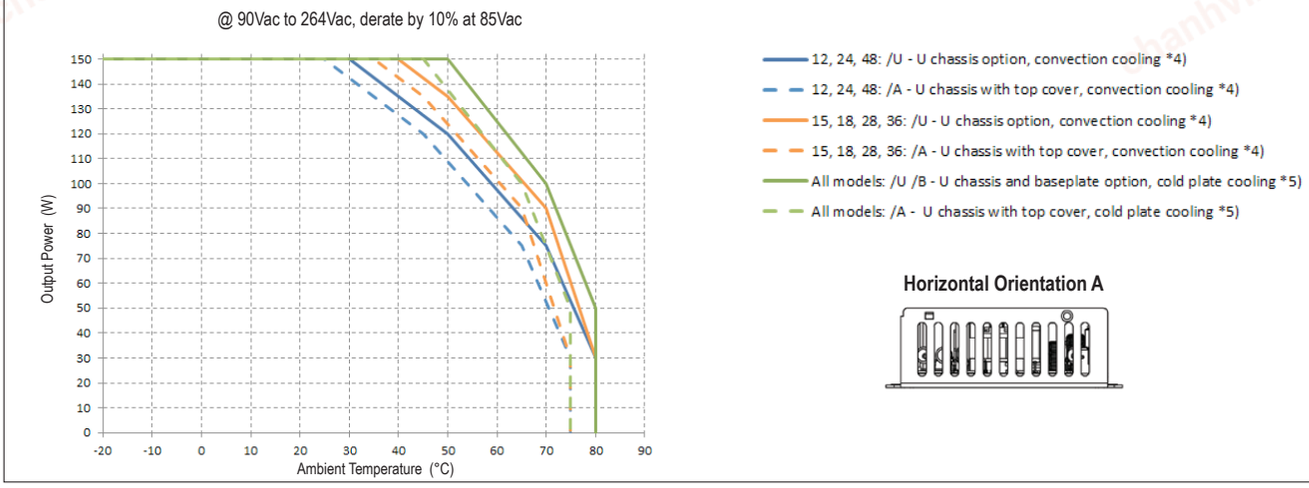

Horizontal Orientation A

Note (*4) 50mm above surface, orientation A, no additional cold plate. *See application note.*
Note (*5) U chassis or Baseplate fixed on a cold plate (system chassis). *See application note.*

Output Power vs Ambient Temperature (/F version and Open Frame with Airflow)

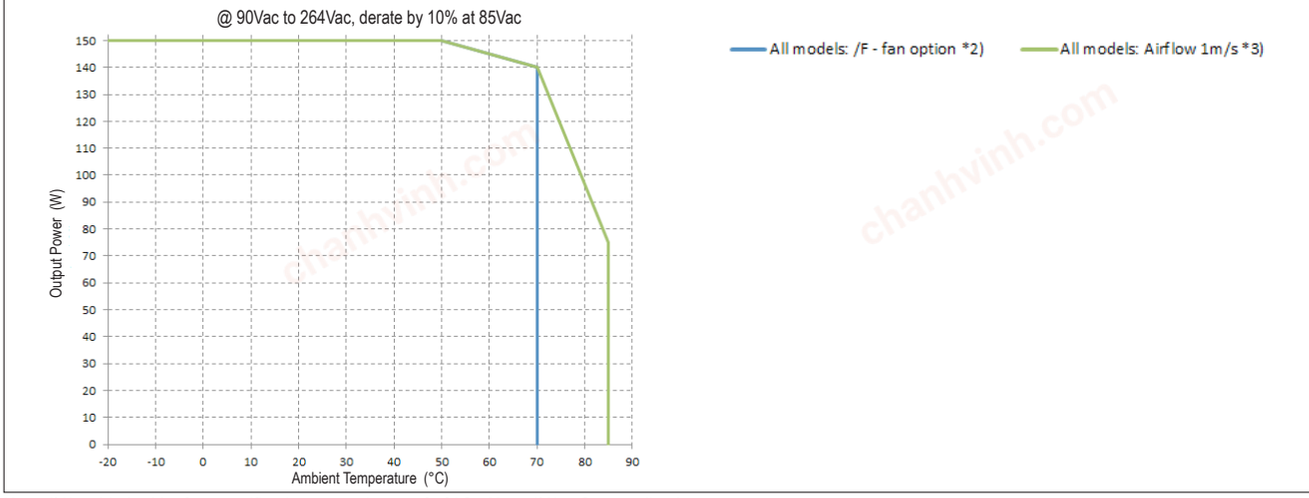

Note (*2) Limited by fan specification to maximum of 70°C. **Note (*3)** *See application note.*

TDK·Lambda

CUS150M E-Cap Life vs Ambient Temperature

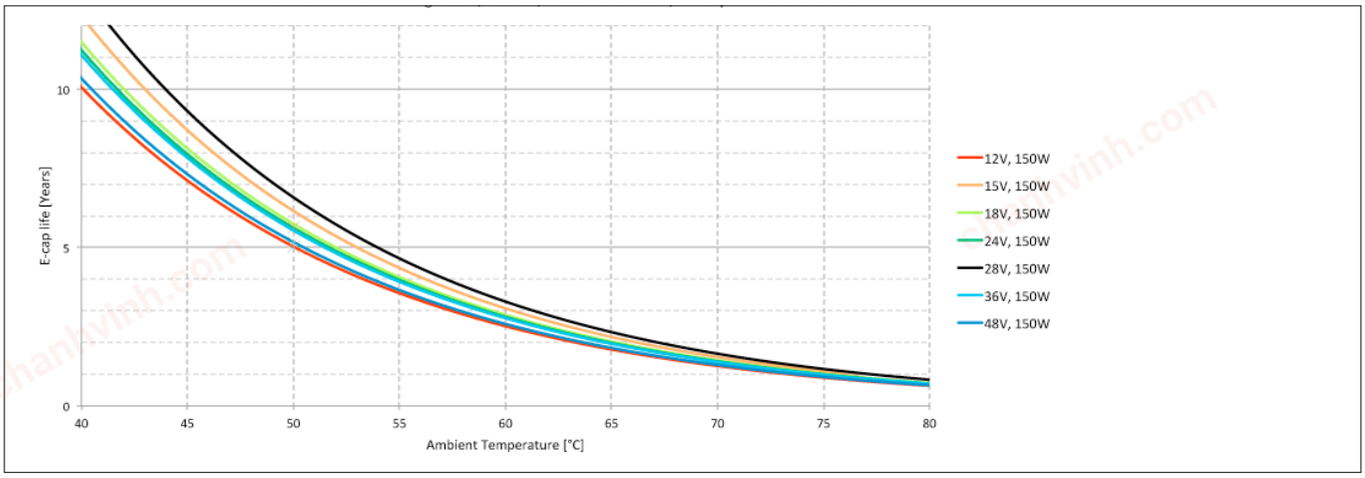

All models: Conduction cooling 150W, 100Vac, measured at 50˚C, other points are calculated

CUS150M E-Cap Life vs Ambient Temperature 12V model: Additional Cooling Options

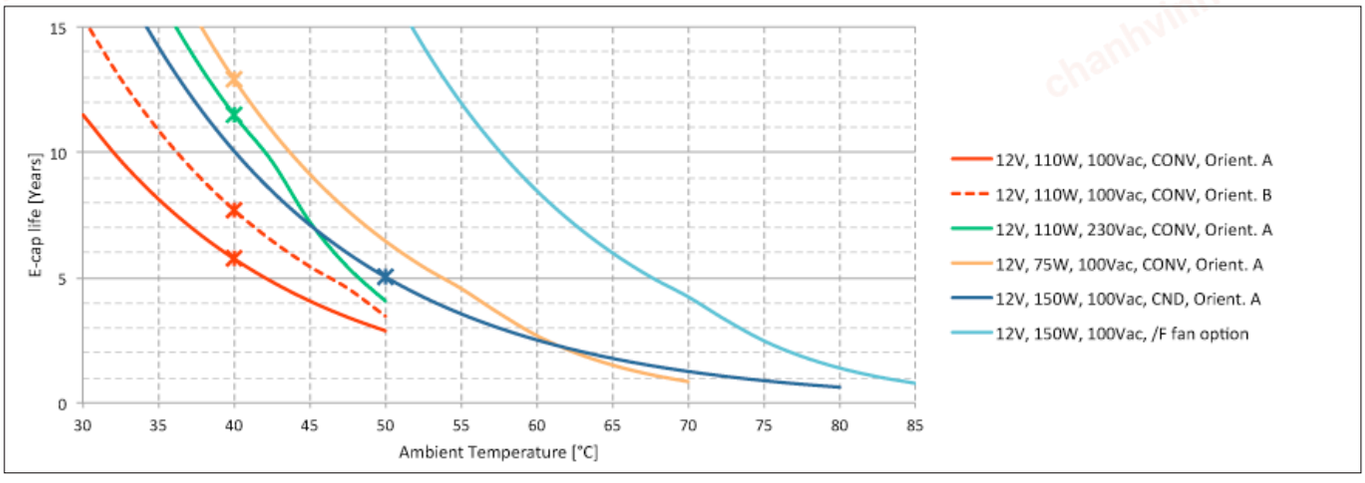

Notes: CONV: Convection Cooling, CND: Conduction Cooling

CUS150M E-Cap Life vs Ambient Temperature 12, 15, 24, 36, 48: conv 110W, 75W, 18, 28: conv 120W, 75W

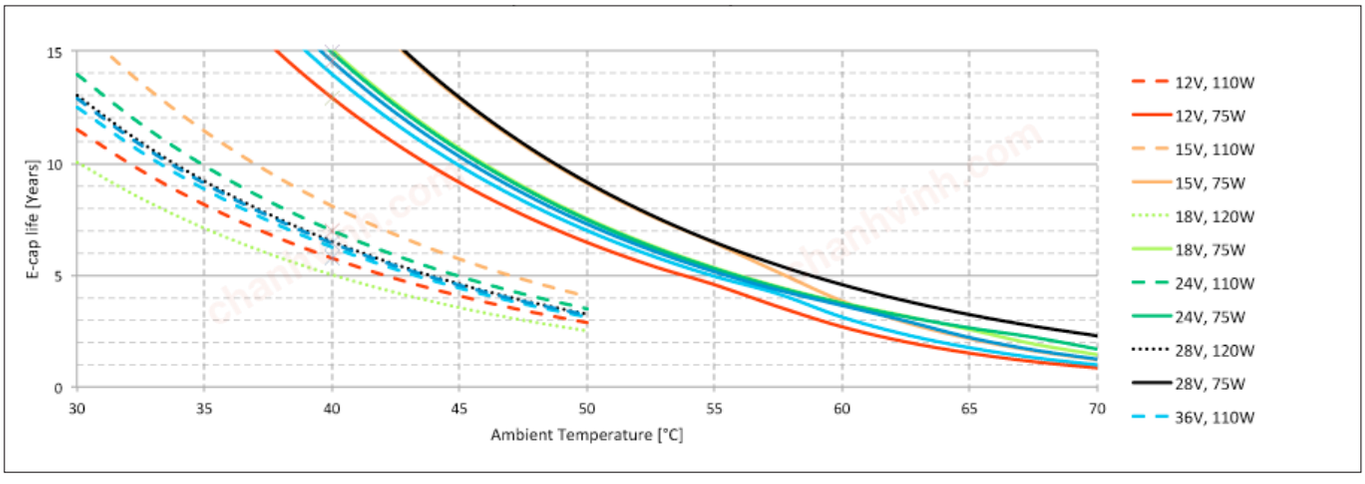

chanhvinh.com

CUS150M Efficiency Graph

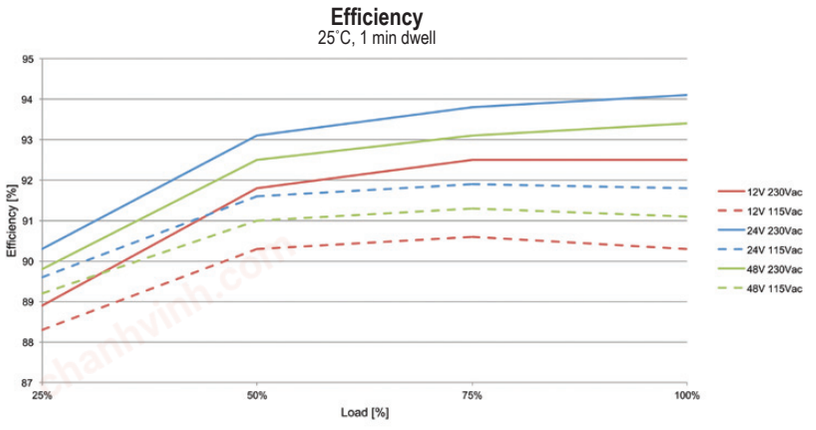

Critical component maximum allowable temperature table

Circuit reference	Description	Maximum temperature (˚C)
L1	Common mode choke	110 (130)
L2	PFC choke	125 (130)
L3	Differential mode choke	125 (130)
C1	Film capacitor	105
C2, C110	Electrolytic capacitors	86 (105)
C6, C102, C104, C105	Electrolytic capacitors	92 (105)
C3	X capacitor	100
C5, C100, C101, C103	Y capacitor	105
TX100	Transformer winding	110
XU101, XU102	Opto-coupler	100 (110)
XD8	Diode	130
J1	Input connector	105
J100	Output connector	105

The higher temperature limits shown in brackets may be used but product life may be reduced

Note: Please refer to installation handbook for full details

chanhvinh.com

TDK·Lambda



TDK-Lambda France SAS
3 Avenue du Canada
Parc Technopolis
Bâtiment Sigma
91940 les Ulis
France
Tel: +33 1 60 12 71 65
Fax: +33 1 60 12 71 66
france@fr.tdk-lambda.com
www.fr.tdk-lambda.com



Italy Sales Office
Via Giacomo Matteotti 62
20092 Cinisello Balsamo (MI)
Italy
Tel: +39 02 61 29 38 63
Fax: +39 02 61 29 09 00
info.italia@it.tdk-lambda.com
www.it.tdk-lambda.com



Netherlands
info@nl.tdk-lambda.com
www.nl.tdk-lambda.com



TDK-Lambda Germany GmbH
Karl-Bold-Strasse 40
77855 Achern
Germany
Tel: +49 7841 666 0
Fax: +49 7841 5000
info.germany@de.tdk-lambda.com
www.de.tdk-lambda.com



Austria Sales Office
Aredstrasse 22
2544 Leobersdorf
Austria
Tel: +43 2256 655 84
Fax: +43 2256 645 12
info@at.tdk-lambda.com
www.de.tdk-lambda.com



Switzerland Sales Office
Eichtalstrasse 55
8634 Hombrechtikon
Switzerland
Tel: +41 44 850 53 53
Fax: +41 44 850 53 50
info@ch.tdk-lambda.com
www.de.tdk-lambda.com



Nordic Sales Office
Haderslevvej 36B
DK-6000 Kolding
Denmark
Tel: +45 8853 8086
info@dk.tdk-lambda.com

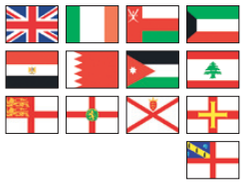

TDK-Lambda UK Ltd.
Kingsley Avenue
Ilfracombe
Devon EX34 8ES
United Kingdom
Tel: +44 (0) 12 71 85 66 66
Fax: +44 (0) 12 71 86 48 94
powersolutions@uk.tdk-lambda.com
www.uk.tdk-lambda.com



TDK-Lambda Ltd.
1 Alexander Yanai
Segula
Petah-Tikva
Israel
Tel: +9 723 902 4333
Fax: +9 723 902 4777
info@tdk-lambda.co.il
www.tdk-lambda.co.il



C.I.S.
Commercial Support:
Tel: +7 (495) 665 2627
Technical Support:
Tel: +7 (812) 658 0463
info@tdk-lambda.ru
www.tdk-lambda.ru

Local Distribution

www.emea.tdk-lambda.com