chanhvinh.com

TDK·Lambda CUS100ME Series

2 x 4” 100W AC-DC Power Supplies

https://product.tdk.com/en/power/cus-m
www.emea.lambda.tdk.com/cus100me

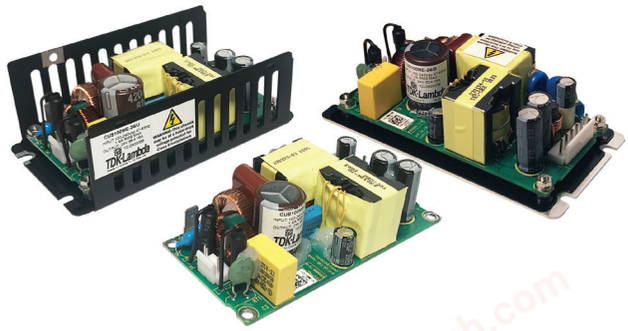

Medical Industrial Test LED COMM Broadcast

The compact CUS100ME is packaged in the industry standard 2x4” footprint. The series can deliver 100W convection cooled at 50°C or up to 75W at 85°C with forced air. Conduction cooled, the CUS100M can deliver 100W at 70°C and 50W at 80°C. With Medical & ITE certifications, the unit can used in both Class I & Class II (no ground wire) applications, and meets Class B Conducted and Radiated EMI. Enclosure options include a baseplate, U channel or U channel with a cover.

Features	Benefits
• Up to 100W Utilizing Convection or Conduction Cooling	• Quiet Operation
• Operation in Ambient Temperatures of up to 85°C	• Suitable for High Ambient Temperature Environments
• Medical Certifications (2 x MOPP)	• Suitable for B and BF Type Medical Equipment
• Class B Conducted and Radiated EMI	• Easier System EMC Compliance
• Suitable for Class I and Class II installations	• Flexible Utilisation
• Compact 2 x 4 x 1.24” Size	• Space Saving in End Equipment
• Enclosure & Cooling Options	• Versatile Application

Model Selector

Model	Nominal Output Voltage (V)	Factory Set [1] Output Voltage Capability (V)	Maximum Current Convection (A)	Maximum Power Convection (W)
CUS100ME-12	12	12 - 13.2	8.33	100
CUS100ME-15	15	15 - 16.5	6.66	100
CUS100ME-18	18	18 - 19.8	5.55	100
CUS100ME-24	24	24 - 26.4	4.16	100
CUS100ME-28	28	28 - 30.8	3.57	100
CUS100ME-36	36	36 - 39.6	2.77	100
CUS100ME-48	48	48 - 50	2.08	100

CUS100ME-	12	/	U	E	M

12
Output voltage 12, 15, 18, 24, 28, 36, 48

U
blank open frame
U U channel
A U channel with cover
B baseplate

E
blank dual fuses
E [2] single input fuse in line

M
blank JST connectors
M [2] Molex connectors

Examples: CUS100ME-24/UEM, CUS100ME-12V5/A

chanhvinh.com

Specifications

Model		CUS100ME
Input		
AC Input Voltage Range (Operating)	Vac	85 - 264 [3]
Nominal Input Voltage Range	Vac	100 - 240 [3] (Note: Safety certified for 90 - 264Vac only)
Input Frequency	Hz	47 - 63 [4]
Input Current (100Vac)	A	1.4
Inrush Current at 230Vac (Cold Start)	A	<65
Leakage Current	uA	<250 at 230Vac 63Hz
Touch Current (Enclosure Leakage)	uA	<100
Power Factor (115/230Vac)	-	>0.97 / 0.89 (100% load)
Harmonic Compliance	-	Meets IEC61000-3-2 Class A
No Load Power Consumption	W	<0.5 (230Vac)
Hold Up Time	ms	>24
Efficiency	%	Up to 94
Average Efficiency	%	>87. Measured at 25%, 50%, 75% and 100% load conditions
Conducted & Radiated EMI	-	EN55032/EN55011-B (See application notes for conditions)
Immunity	-	Compliant with EN60601-1-2;2015 (Ed4), see immunity table
Insulation Class	-	Construction suitable for Class I or Class II installation
Safety Certifications and Markings	-	IEC/EN/UL/CSA62368-1, 60950-1, IEC/EN60601-1, ES60601-1, CE Mark and UKCA Mark Designed to meet IEC61010-1 and EN60335-1 compliant versions are available [2]

Immunity

Test	Standard	Test Level	Criteria	Notes
ESD	EN61000-4-2	4	A	-
Radiated Susceptibility	EN61000-4-3	3	A	Includes proximity field requirements of EN60601-1-2:2015
Electrical Fast Transient Burst	EN61000-4-4	4	A	(AC Port, 5kHz and 100kHz)
Surge	EN61000-4-5	3	A	-
Conducted Susceptibility	EN61000-4-6	3	A	-
Magnetic fields	EN61000-4-8	4	A	-
Voltage Dips and Input Interuptions	EN61000-4-11 Class 3 Industrial, incl EN55024 (100Vac)	0% for 1/2 cycle	A	-
		0% for 1 cycle	A	-
		40% for 10/12 cycles	B	-
		70% for 25/30 cycles	A	-
		80% for 250/300 cycles	A	-
		0% for 250/300 cycles	B	-
	EN61000-4-11 Class 3 Industrial, incl EN55024 (240Vac)	0% for 1/2 cycle	A	-
		0% for 1 cycle	A	-
		40% for 10/12 cycles	A	-
		70% for 25/30 cycles	A	-
		80% for 250/300 cycles	A	-
		0% for 250/300 cycles	B	-
	EN60601-1-2:2015 (100Vac)	0% for 1/2 cycle	A	-
		0% for 1 cycle	A	-
		70% for 25/30 cycles	A	-
		0% for 250/300 cycles	B	-
	EN60601-1-2:2015 (240Vac)	0% for 1/2 cycle	A	-
		0% for 1 cycle	A	-
		70% for 25/30 cycles	A	-
		0% for 250/300 cycles	B	-
Ringwave Test	EN61000-4-12	3	A	-
Voltage Fluctuations	EN61000-4-14	Class 3	A	-
SEMI F47 Line Dip	SEMI F47	-	-	Consult factory

chanhvinh.com

Specifications

Model		CUS100ME
Output		
Line Regulation	%	<0.5 (90 - 264Vac)
Load Regulation	%	<1 (0 - 100% load)
Ripple & Noise	%	<1% of nominal output for operating temperatures above 0°C At -20°C: 12V model <4%, 15V & 18V model <3%, other models <2%
Temperature Coefficient	%/°C	±0.02%/°C
Minimum Load	-	No minimum load required
Overcurrent Protection	%	110 to 190%. Hiccup mode, automatic recovery
Overvoltage Protection	-	115-140% of standard output voltage for each model, 48V model max 60V. Latching (unit shutdown), cycle AC input to reset
Remote Sense	-	None
Fan Supply	-	None
Parallel Operation	-	Not possible
Series Operation	-	Please contact Technical Sales for guidance
Environmental		
Operating Temperature (-30°C start-up)	°C	-20°C to +85°C, see derating curves below for operation above +50°C
Storage Temperature	°C	-40°C to +85°C
Humidity (non condensing)	%RH	5 - 95%RH
Cooling	-	Convection, conduction or forced air cooling. See derating curves below
Altitude	m	5,000m
Withstand Voltage	Vac	Input to Ground 1.5kVAC (1xMOPP), Input to Output 4kVAC (2xMOPP), Output to Ground 1.5kVAC (1xMOPP)
Isolation Resistance	MΩ	>100MΩ at 25°C, 70%RH & 500VDC
Vibration (Non Operating)	-	2G, 10-500Hz for 1 hour
Shock (Non Operating)	-	30G, 11ms half sine
Other		
Weight	g	Open Frame: 180g; /U: 240g; /A: 255g; /B: 220g
Size (WxLxH)	mm	Open frame version: 50.8 x 101.6 x 31.5
Size (WxLxH)	Inches	Open frame version: 2 x 4 x 1.24
Connectors	-	Input: JST B2P3-VH, Output: JST B6P-VH
Warranty	yrs	5

Notes:
See website for detailed specifications, test methods and installation manual.
Specification parameters apply at 25°C ambient temperature unless otherwise stated.
(1) Output voltage is factory set and not user adjustable.
Non-standard output versions may be subject to minimum order quantities and variations to specification. For all non-standard output voltage settings please consult Sales.
(2) Subject to Minimum Order Quantities. Please contact Sales
(3) Derate linearly to 90% load from 90 to 85Vac input.
(4) For operation at 440Hz please consult Technical Sales.

chanhvinh.com

Outline drawing CUS100ME (Open Frame unit)

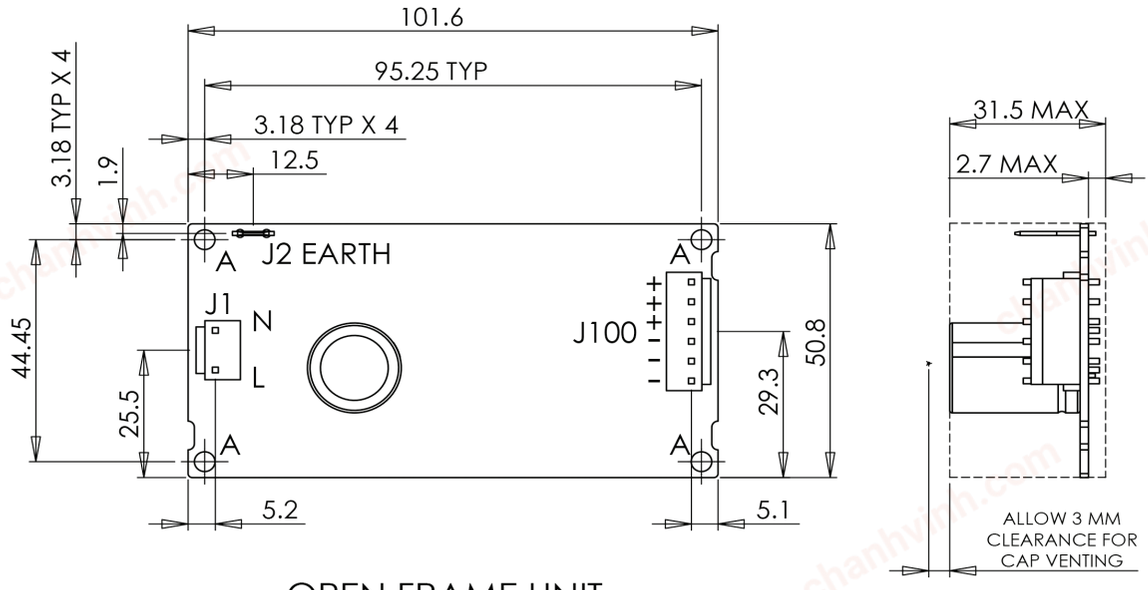

OPEN FRAME UNIT

DIMENSION TOLERANCES: 0.00 ±0.2 0.0 ±0.4

(CONNECTOR PART NUMBERS ALSO IN APPLICATION NOTE)

REF DES	MANUFACTURER	CONNECTOR TYPE	MATING HOUSING	CRIMP
J1	JST	B2P3-VH	VAR-2	20-18AWG - SVA-41T-P1.1
J1 M-option	Molex	10-63-4027	09-50-1031	08-70-1031
J2	Tyco	62490	22-18AWG - 2-520407-2 16-14AWG - 3-520408-2	22-18AWG - 2-520407-2 16-14AWG - 2-520408-2
J100	JST	B6P-VH	VHR-6N	22-18AWG - SVH-21T-P1.1 20-16AWG - SVH-41T-P1.1
J100 M-option	Molex	09-65-2068	09-50-1061	08-70-1031

NOTE:
A - 4 OFF FIXING HOLES ø3.96 TO ACCOMMODATE M3 SCREWS
MAXIMUM STANDOFF DIAMETER - 5.4mm
MAXIMUM TOP SIDE WASHER DIAMETER - 6mm

chanhvinh.com

Outline drawing CUS100ME/U (U Channel) Option

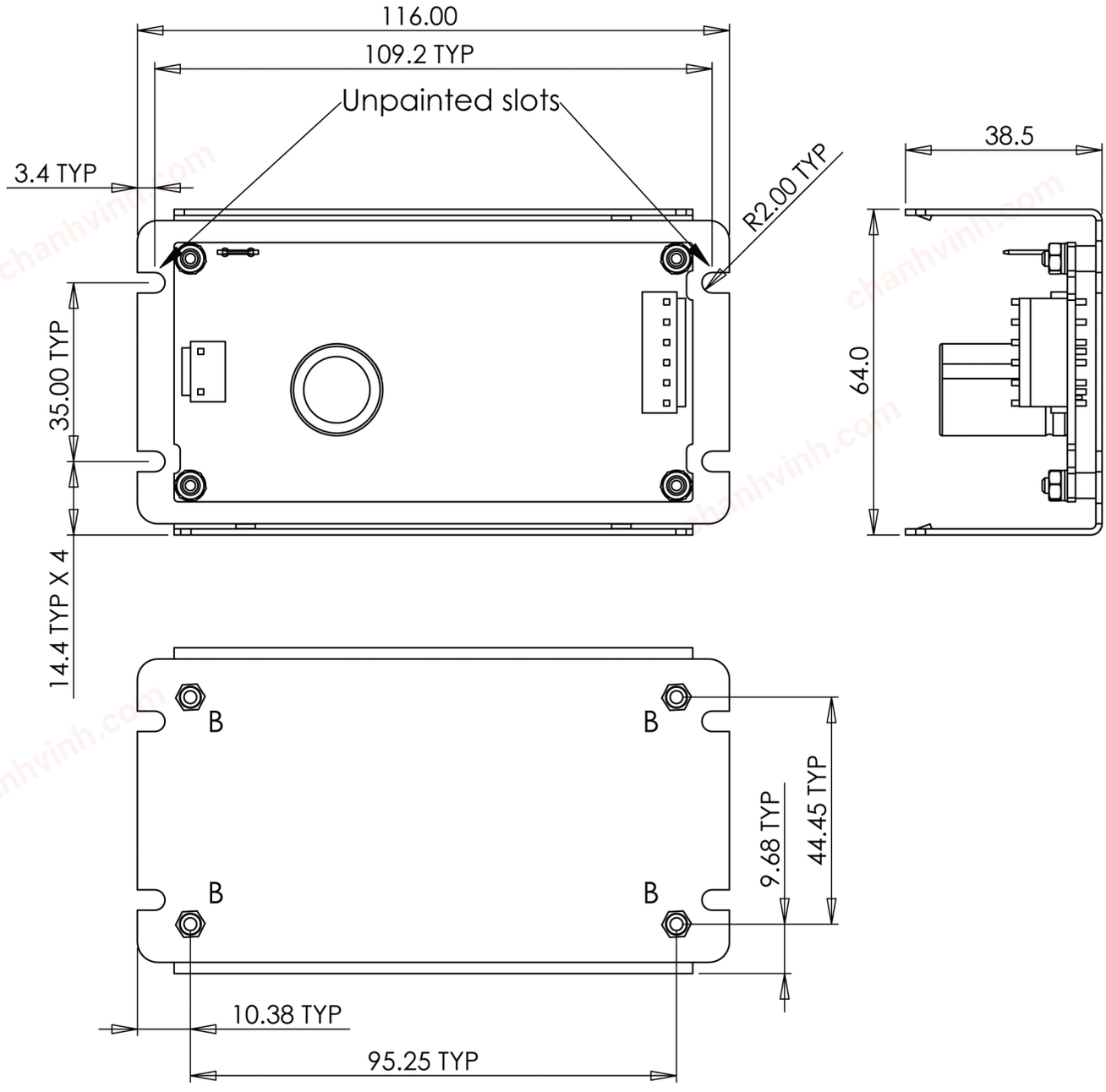

DIMENSION TOLERANCES: 0.00 ±0.2 0.0 ±0.4

NOTE: B - 4 OFF M3 FIXING - max thread penetration 4.25 mm
RECOMMENDED TORQUE - M3 - 0.5 - 0.6 Nm

chanhvinh.com

Outline drawing CUS100ME/B (Baseplate) Option

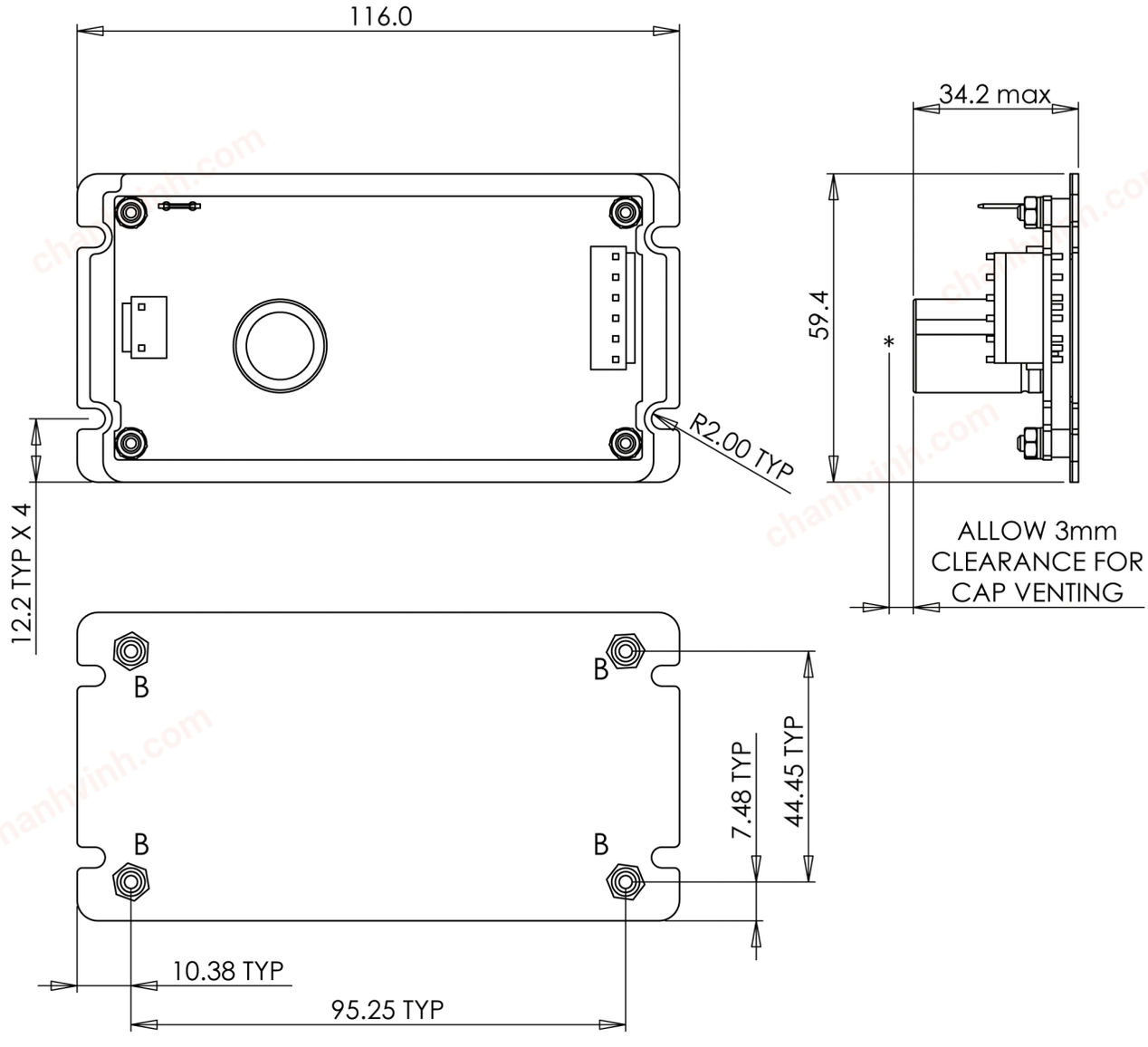

DIMENSION TOLERANCES: 0.00 ±0.2 0.0 ±0.4

NOTE: B - 4 OFF M3 FIXING - max thread penetration 4.25 mm

RECOMMENDED TORQUE - M3 - 0.5 - 0.6 Nm

chanhvinh.com

Outline drawing CUS100ME/A (U Channel with cover) Option

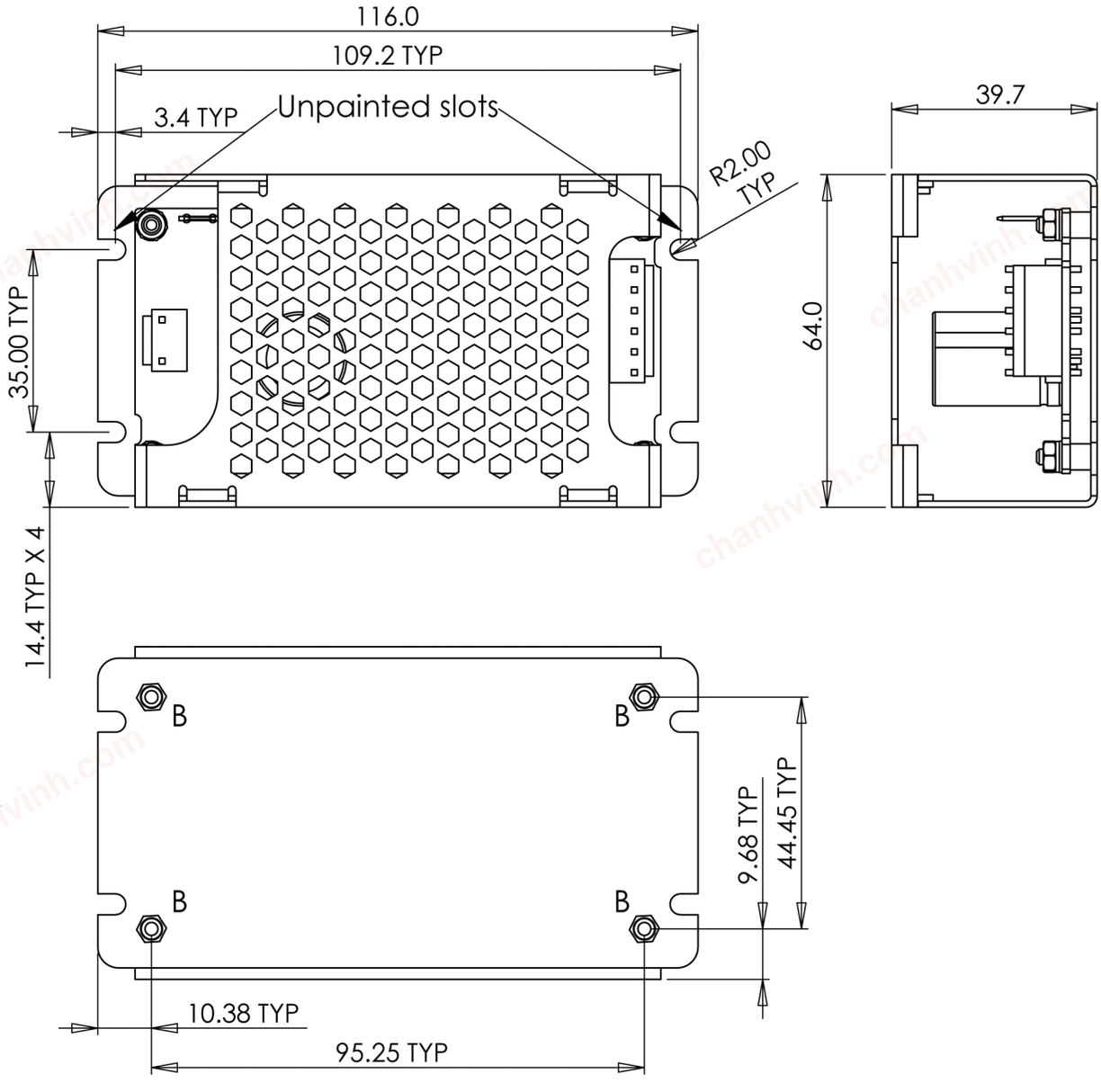

DIMENSION TOLERANCES: 0.00 ±0.2 0.0 ±0.4

NOTE: B - 4 OFF M3 FIXING - max thread penetration 4.25 mm

RECOMMENDED TORQUE - M3 - 0.5 - 0.6 Nm

chanhvinh.com

Output Power vs Ambient Temperature (Convection/Conduction Cooled)

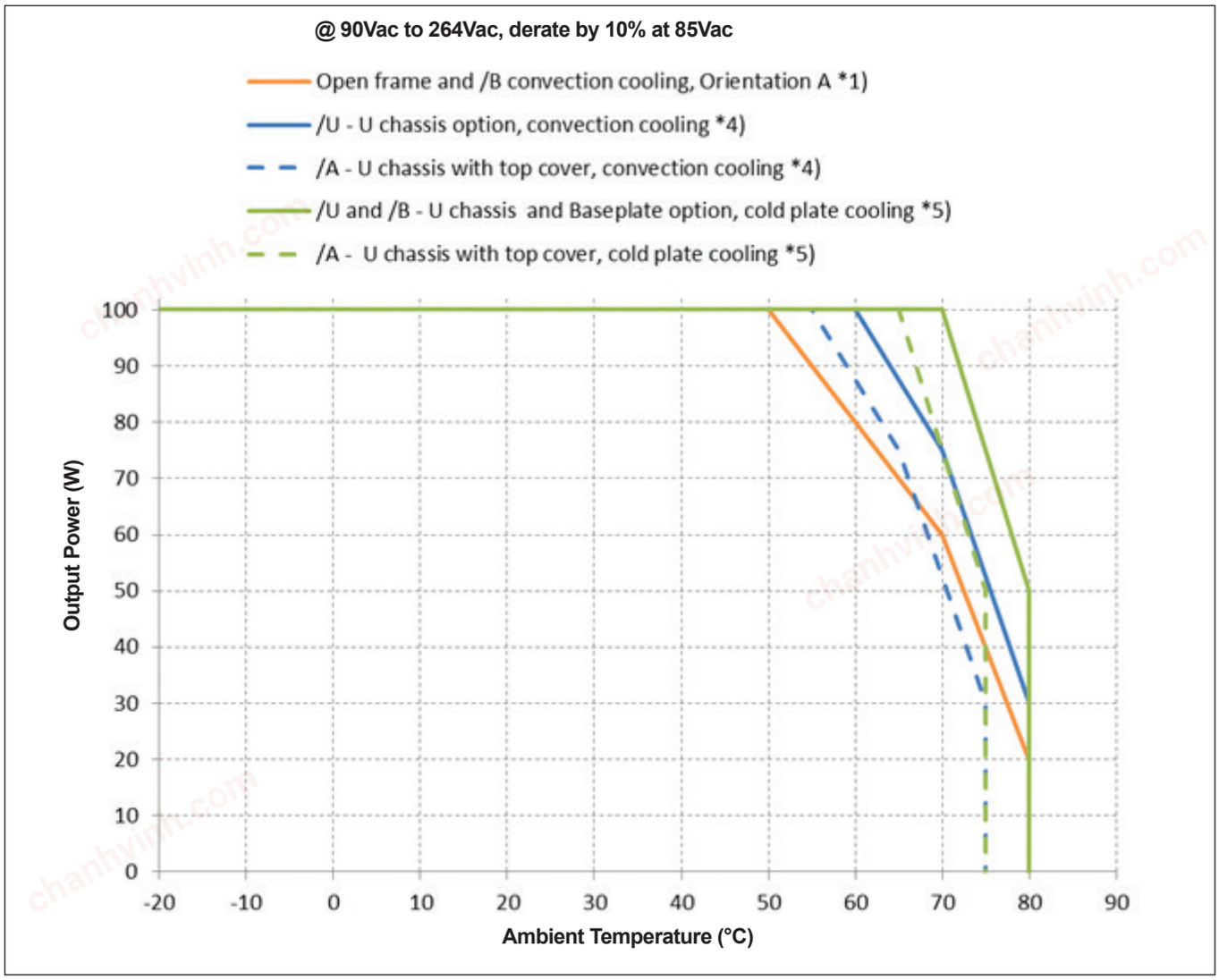

chanhvinh.com

Output Power vs Ambient Temperature (Forced Air Cooled)

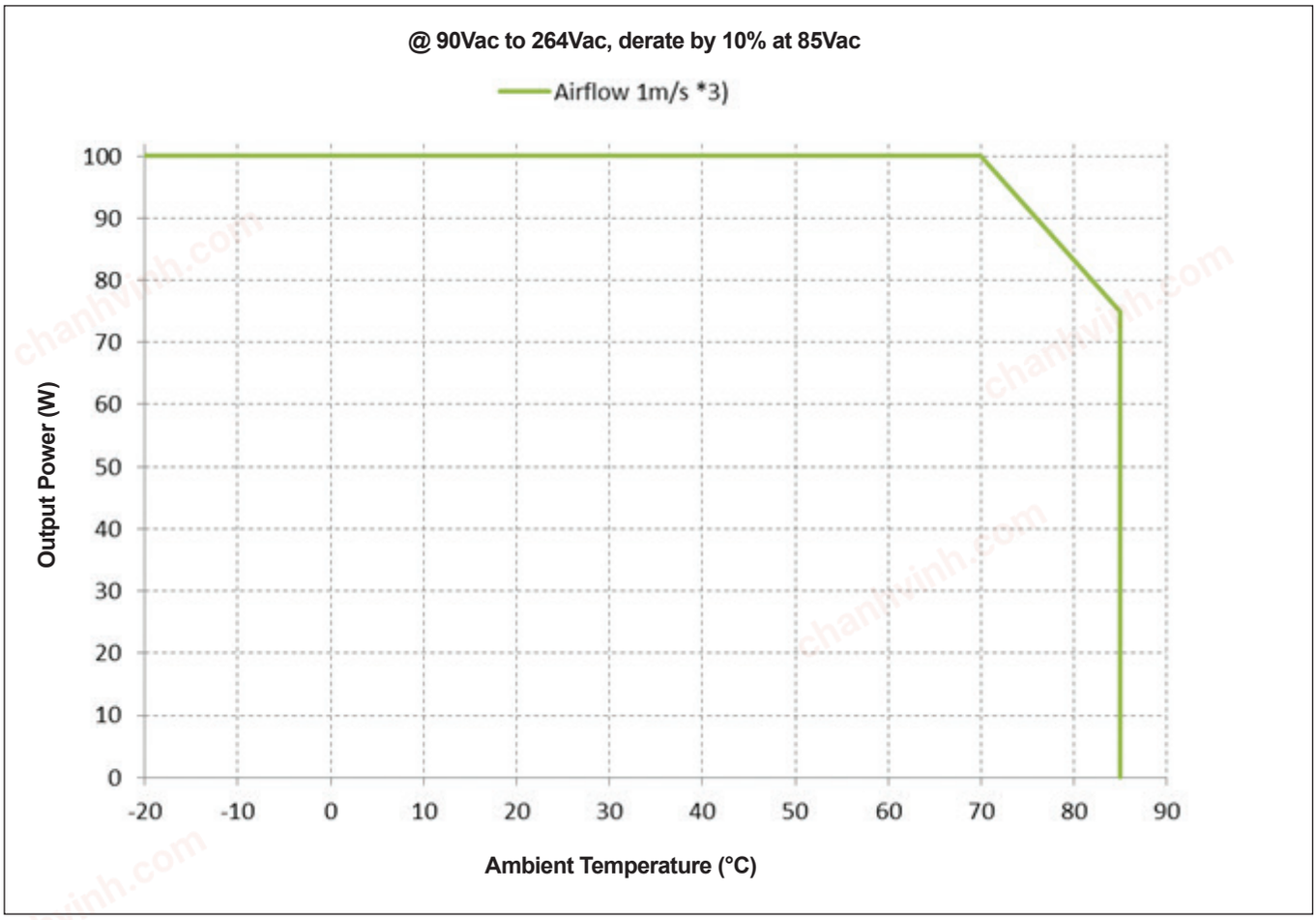

Notes:

1) 50mm above surface
2) Not applicable
3) Tested with airflow direction G (see Application Note)
4) 50mm above surface, orientation A (see Application Note) no additional coldplate
5) U chassis or Baseplate fixed on a coldplate (system chassis), orientation A (see Application Note)

/B baseplate option performance is the same as with the U chassis option for coldplate cooling

chanhvinh.com

TDK-Lambda France SAS
Tel: +33 1 60 12 71 65
tlf.fr-powersolutions@tdk.com
www.emea.lambda.tdk.com/fr

Italy Sales Office
Tel +39 02 61 29 38 63
tlf.it-powersolutions@tdk.com
www.emea.lambda.tdk.com/it

Netherlands
tlf.nl-powersolutions@tdk.com
www.emea.lambda.tdk.com/nl

TDK-Lambda Europe GmbH
Tel: +49 7841 666 0
tlg.powersolutions@tdk.com
www.emea.lambda.tdk.com/de

Austria Sales Office
Tel: +43 2256 655 84
tlg.at-powersolutions@tdk.com
www.emea.lambda.tdk.com/at

Switzerland Sales Office
Tel: +41 44 850 53 53
tlg.ch-powersolutions@tdk.com
www.emea.lambda.tdk.com/ch

TDK-Lambda Europe GmbH
Tel: Tel. +45 3222 8086
tlg.dk-powersolutions@tdk.com
www.emea.lambda.tdk.com/dk

TDK-Lambda UK Ltd.
Tel: +44 (0) 12 71 85 66 66
tlu.powersolutions@tdk.com
www.emea.lambda.tdk.com/uk

TDK-Lambda Ltd.
Tel: +9 723 902 4333
tli.powersolutions@tdk.com
www.emea.lambda.tdk.com/il-en

TDK-Lambda Americas
Tel: +1 800-LAMBDA-4 or 1-800-526-2324
tla.powersolutions@tdk.com
www.us.lambda.tdk.com

TDK Electronics do Brasil Ltda
Tel: +55 11 3289-9599
sales.br@tdk-electronics.tdk.com
www.tdk-electronics.tdk.com/en

TDK-Lambda Corporation
Tel: +81-3-6778-1113
www.jp.lambda.tdk.com

TDK-Lambda (China) Electronics Co. Ltd.
Tel: +86 21 6485-0777
tlc.powersolutions@tdk.com
www.lambda.tdk.com.cn

TDK-Lambda Singapore Pte Ltd.
Tel: +65 6251 7211
tls.marketing@tdk.com
www.sg.lambda.tdk.com

TDK India Private Limited, Power Supply Division
Tel: +91 80 4039-0660
mathew.philip@tdk.com
www.sg.lambda.tdk.com