chanhvinh.com

TAOGLAS



Accura TS Series
Magnetic-mount Bracket

MMB.A.TS / MMB.W.TS

The Taoglas MMB.x.TS Series of brackets are purpose-built to enhance the versatility and ease of mounting for the high-performance Accura TS Series of GNSS antennas. Designed for magnetic or adhesive mounting, MMB.x.TS ensures seamless deployment for a variety of applications, ensuring antenna installation is simpler than ever and making it a reliable choice for even the most demanding environments.

Compact Design: Measuring less than 75mm in diameter, with a height of just 16.5mm, the bracket ensures a low-profile, unobtrusive installation.

Flexible Mounting Options:
Each MMB.x.TS bracket comes with an adhesive pad, rubber spacer for the TS.15/16 and has three super-strong neodymium magnets integrated for mounting the antenna in almost any environment.

Specifications:

Variations:	Black	MMB.A.TS
	White	MMB.W.TS
Dimensions:	Diameter 74.3 mm x Height 16.5mm	
Materials:	Base	ASA/PW-978B
	Spacer	Silicon Rubber
	Adhesive Pad	3M 944HK / CR4305
Cable:	TGC-1.5DS	1500mm
Used with:	TS Accura Series	
	TS.125.0111, TS.15.0111 and TS.16.0111	

Dimensions:

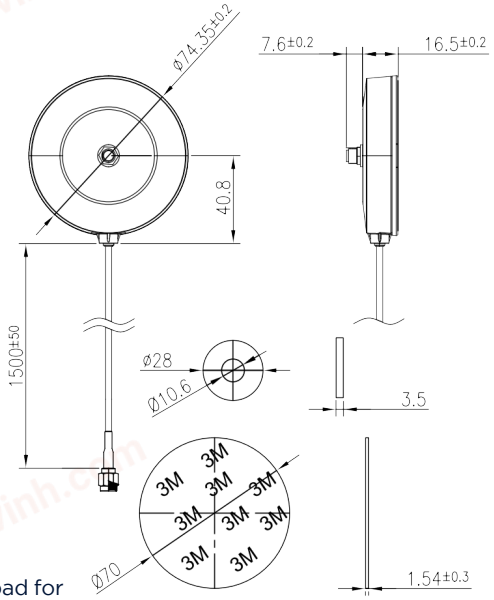

Suitable for TS.15, TS.16 and TS.125 Products



Accessories:

- Adhesive pad for alternative mounting option
- Rubber gasket for TS.15 and TS.16 products to mount flush

Taoglas makes no warranties based on the accuracy or completeness of the contents of this document and reserves the right to make changes to specifications and product descriptions at any time without notice. Taoglas reserves all rights to this document and the information contained herein. Reproduction, use or disclosure to third parties without express permission is strictly prohibited.

Ireland & USA ISO 9001:2015 Certified
Taiwan ISO 9001:2015 Certified
IATF16949

© Taoglas 2024