chanhvinh.com

VNQ5E160K-E

Quad channel high side driver for automotive applications

Features

Max transient supply voltage	V_{CC}	41V
Operating voltage range	V_{CC}	4.5 to 28V
Max on-state resistance (per ch.)	R_{ON}	160 mΩ
Current limitation (typ)	I_{LIMH}	10 A
Off-state supply current	I_S	2 µA(1)

1. Typical value with all loads connected.

- General
  - Inrush current active management by power limitation
  - Very low standby current
  - 3.0V CMOS compatible inputs
  - Optimized electromagnetic emissions
  - Very low electromagnetic susceptibility
  - In compliance with the 2002/95/EC european directive
- Diagnostic functions
  - Open Drain status output
  - On-state open load detection
  - Off-state open load detection
  - Output short to V_{CC} detection
  - Overload and short to ground (power limitation) indication
  - Thermal shutdown indication
- Protections
  - Undervoltage shut-down
  - Overvoltage clamp
  - Load current limitation
  - Self limiting of fast thermal transients
  - Protection against loss of ground and loss of V_{CC}
  - Over temperature shutdown with auto restart (thermal shutdown)
  - Reverse battery protected (see *Application schematic on page 22*)
  - Electrostatic discharge protection

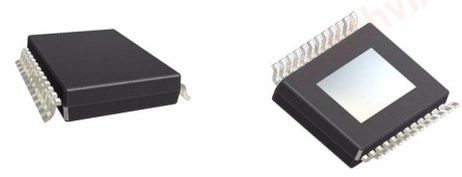

PowerSSO-24

Application

- All types of resistive, inductive and capacitive loads

Description

The VNQ5E160K-E is a quad channel high-side driver manufactured in the ST proprietary VIPower M0-5 technology and housed in the tiny PowerSSO-24 package.

The VNQ5E160K-E is designed to drive automotive grounded loads delivering protection, diagnostics and easy 3V and 5V CMOS-compatible interface with any microcontroller.

The device integrates advanced protective functions such as load current limitation, inrush and overload active management by power limitation, over temperature shut-off with auto restart and over-voltage active clamp.

A dedicated active low digital status pin is associated with every output channel in order to provide *Enhanced* diagnostic functions including fast detection of overload and short-circuit to ground, over temperature indication, short-circuit to V_{CC} diagnosis and ON & OFF-state open-load detection.

The diagnostic feedback of the whole device can be disabled by pulling the STAT_DIS pin up, thus allowing wired-ORing with other similar devices.

chanhvinh.com

Contents

1 **Block diagram and pin configuration 5**

2 **Electrical specifications 7**

2.1 Absolute maximum ratings 7

2.2 Thermal data 8

2.3 Electrical characteristics 9

2.4 Waveforms 15

2.5 Electrical characteristics curves 19

3 **Application information 22**

3.1 GND protection network against reverse battery 22

3.1.1 Solution 1: resistor in the ground line (RGND only) 22

3.1.2 Solution 2: diode (DGND) in the ground line 23

3.2 Load dump protection 23

3.3 MCU I/Os protection 23

3.4 Open-load detection in off-state 24

3.5 Maximum demagnetization energy (VCC = 13.5V) 25

4 **Package and PC board thermal data 26**

4.1 PowerSSO-24 thermal data 26

5 **Package and packing information 29**

5.1 ECOPACK® packages 29

5.2 PowerSSO-24 mechanical data 29

5.3 Packing information 31

6 **Order codes 32**

7 **Revision history 33**

chanhvinh.com

List of tables

Table 1. Pin functions . . . 5
Table 2. Suggested connections for unused and not connected pins . . . 6
Table 3. Absolute maximum ratings . . . 7
Table 4. Thermal data . . . 8
Table 5. Power section . . . 9
Table 6. Switching (VCC = 13V; Tj = 25°C) . . . 9
Table 7. Status pin (V_{SD}=0) . . . 9
Table 8. Protection . . . 10
Table 9. Openload detection (8V<V_{CC}<18V) . . . 10
Table 10. Logic input . . . 11
Table 11. Truth table . . . 13
Table 12. Electrical transient requirements (part 1/3) . . . 14
Table 13. Electrical transient requirements (part 2/3) . . . 14
Table 14. Electrical transient requirements (part 3/3) . . . 14
Table 15. Thermal parameters . . . 28
Table 16. PowerSSO-24™ mechanical data . . . 30
Table 17. Device summary . . . 32
Table 18. Document revision history . . . 33

chanhvinh.com

List of figures

Figure 1. Block diagram . . . 5
Figure 2. Configuration diagram (top view) . . . 6
Figure 3. Current and voltage conventions . . . 7
Figure 4. Status timings . . . 12
Figure 5. Output voltage drop limitation . . . 12
Figure 6. Switching characteristics . . . 13
Figure 7. Normal operation . . . 15
Figure 8. Undervoltage shut-down . . . 15
Figure 9. Overload or Short to GND . . . 16
Figure 10. Intermittent Overload . . . 16
Figure 11. Open Load with external pull-up . . . 17
Figure 12. Open Load without external pull-up . . . 17
Figure 13. Short to V_{CC} . . . 18
Figure 14. T_J evolution in Overload or Short to GND . . . 18
Figure 15. Off-state output current . . . 19
Figure 16. High level input current . . . 19
Figure 17. Input clamp voltage . . . 19
Figure 18. Input high level . . . 19
Figure 19. Input low level . . . 19
Figure 20. Low level STAT_DIS current . . . 19
Figure 21. On-state resistance vs T_{case} . . . 20
Figure 22. High level STAT_DIS current . . . 20
Figure 23. On-state resistance vs V_{CC} . . . 20
Figure 24. Low level input current . . . 20
Figure 25. I_{LIM} vs T_{case} . . . 20
Figure 26. Turn-on voltage slope . . . 20
Figure 27. Undervoltage shutdown . . . 21
Figure 28. Turn-off voltage slope . . . 21
Figure 29. STAT_DIS clamp voltage . . . 21
Figure 30. High level STAT_DIS voltage . . . 21
Figure 31. Low level STAT_DIS voltage . . . 21
Figure 32. Application schematic . . . 22
Figure 33. Open load detection in off-state . . . 24
Figure 34. Maximum turn-off current versus inductance (for each channel) . . . 25
Figure 35. PowerSSO-24 PC board . . . 26
Figure 36. Rthj-amb vs. PCB copper area in open box free air condition (one channel ON) . . . 26
Figure 37. PowerSSO-24 thermal impedance junction ambient single pulse (one channel ON) . . . 27
Figure 38. Thermal fitting model of a double channel HSD in PowerSSO-24(1) . . . 27
Figure 39. PowerSSO-24 package dimensions . . . 29
Figure 40. PowerSSO-24 tube shipment (no suffix) . . . 31
Figure 41. PowerSSO-24 tape and reel shipment (suffix “TR”) . . . 31

chanhvinh.com

1 Block diagram and pin configuration

Figure 1. Block diagram

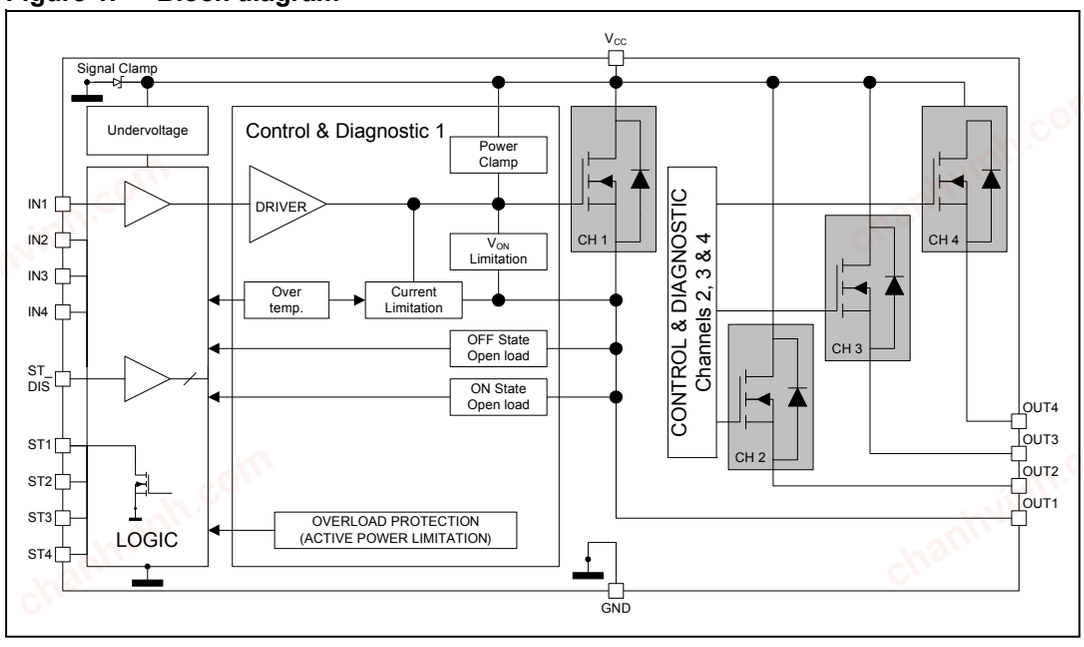

Table 1. Pin functions

Name	Function
V_{CC}	Battery connection.
OUTPUTn	Power output.
GND	Ground connection. Must be reverse battery protected by an external diode / resistor network.
INPUTn	Voltage controlled input pin with hysteresis, CMOS compatible. Controls output switch state.
STATUSn	Open drain digital diagnostic pin.
STAT_DIS	Active high CMOS compatible pin, to disable the STATUS pin.

chanhvinh.com

Figure 2. Configuration diagram (top view)

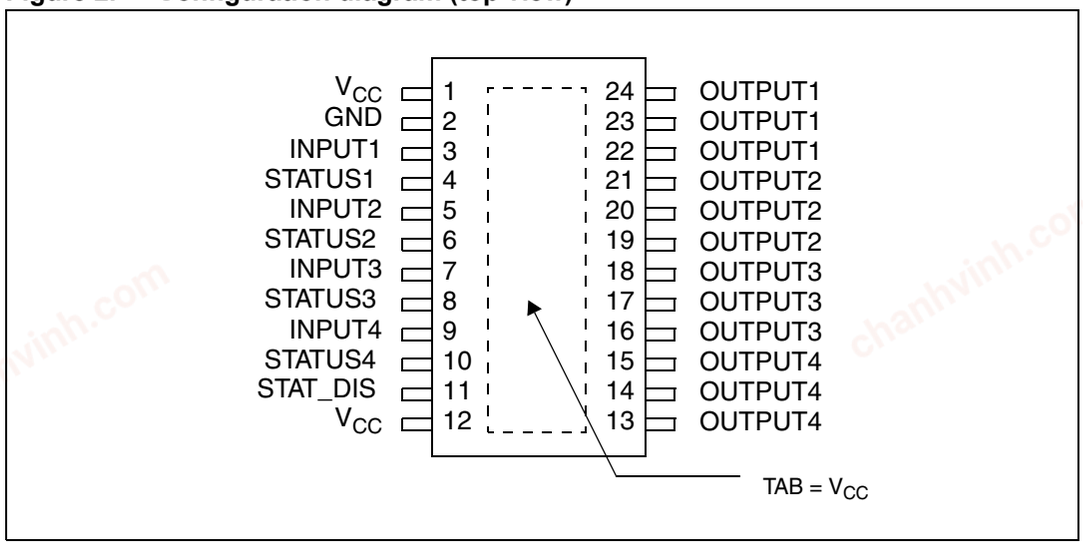

Table 2. Suggested connections for unused and not connected pins

Connection / pin	Status	N.C.	Output	Input	STAT_DIS
Floating	X	X	X	X	X
To ground	Not allowed	X	Not allowed	Through 10kΩ resistor	Through 10kΩ resistor

chanhvinh.com

2 Electrical specifications

Figure 3. Current and voltage conventions

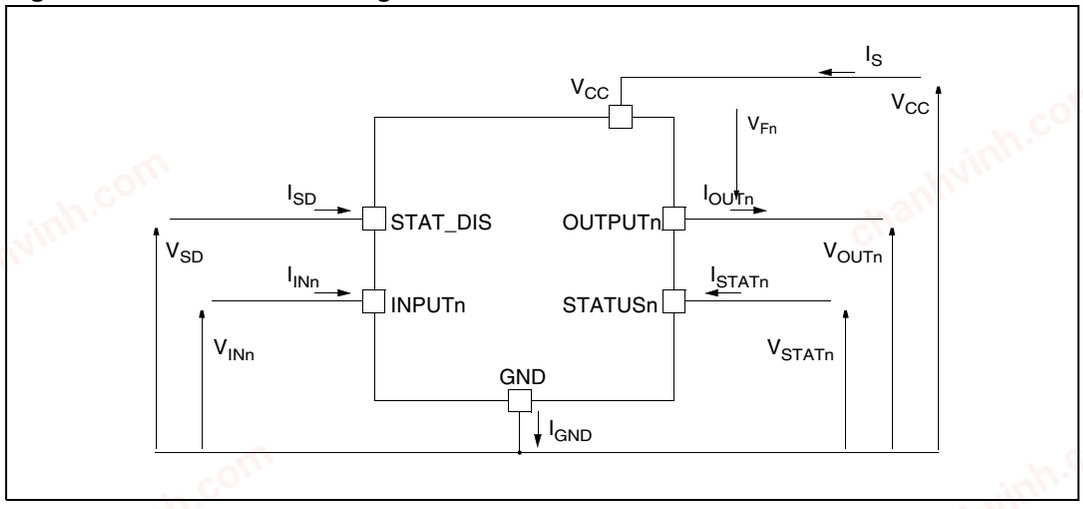

Note: $V_{Fn} = V_{OUTn} - V_{CC}$ during reverse battery condition.

2.1 Absolute maximum ratings

Stressing the device above the rating listed in the “Absolute maximum ratings” table may cause permanent damage to the device. These are stress ratings only and operation of the device at these or any other conditions above those indicated in the operating sections of this specification is not implied. Exposure to the conditions in table below for extended periods may affect device reliability. Refer also to the STMicroelectronics SURE Program and other relevant quality document.

Table 3. Absolute maximum ratings

Symbol	Parameter	Value	Unit
V_{CC}	DC supply voltage	41	V
- V_{CC}	Reverse DC supply voltage	0.3	V
- I_{GND}	DC reverse ground pin current	200	mA
I_{OUT}	DC output current	Internally limited	A
- I_{OUT}	Reverse DC output current	6	A
I_{IN}	DC input current	+10 / -1	mA
I_{STAT}	DC status current	+10 / -1	mA
I_{STAT_DIS}	DC status disable current	+10 / -1	mA
E_{MAX}	Maximum switching energy (single pulse) (L= 8 mH; R_L=0 Ω; V_{bat}=13.5 V; T_{jstart}=150 °C; $I_{OUT} = I_{limL}$(Typ.))	36	mJ

chanhvinh.com

Table 3. Absolute maximum ratings

Symbol	Parameter	Value	Unit
V_{ESD}	Electrostatic discharge (Human Body Model: R=1.5KΩ; C=100pF) – Input – Status – STAT_DIS – Output – V_{CC}	 4000 4000 4000 5000 5000	 V V V V V
V_{ESD}	Charge device model (CDM-AEC-Q100-011)	750	V
T_j	Junction operating temperature	-40 to 150	°C
T_{stg}	Storage temperature	- 55 to 150	°C

2.2 Thermal data

Table 4. Thermal data

Symbol	Parameter	Max. value	Unit
$R_{thj\text{-}case}$	Thermal resistance junction-case (max) (with one channel on)	8	°C/W
$R_{thj\text{-}amb}$	Thermal resistance junction-ambient (max)	See *Figure 36*	°C/W

chanhvinh.com

2.3 Electrical characteristics

Values specified in this section are for 8V<V_{CC}<28V; -40°C< T_j <150°C, unless otherwise stated.

Table 5. Power section

Symbol	Parameter	Test conditions	Min.	Typ.	Max.	Unit
V_{CC}	Operating supply voltage		4.5	13	28	V
V_{USD}	Undervoltage shut-down			3.5	4.5	V
$V_{USDhyst}$	Undervoltage shut-down hysteresis			0.5		V
R_{ON}	On-state resistance(1)	I_{OUT}=1A; T_j=25°C I_{OUT}=1A; T_j=150°C I_{OUT}=1A; V_{CC}=5V; T_j=25°C			160 320 210	mΩ mΩ mΩ
V_{clamp}	Clamp voltage	I_S = 20 mA	41	46	52	V
I_S	Supply current	Off-state; V_{CC}=13V; V_{IN}=V_{OUT}=0V; T_j=25°C On-state; V_{IN}=5V; V_{CC}=13V; I_{OUT}=0A		2(2) 8	5(2) 14	µA mA
$I_{L(off1)}$	Off-state output current(1)	V_{IN}=V_{OUT}=0V; V_{CC}=13V; T_j=25°C V_{IN}=V_{OUT}=0V; V_{CC}=13V; T_j=125°C	0 0	0.01	3 5	µA µA
V_F	Output - V_{CC} diode voltage(1)	-I_{OUT}=0.6A; T_j=150°C			0.7	V

1. For each channel.
2. PowerMOS leakage included.

Table 6. Switching (V_{CC} = 13V; T_j = 25°C)

Symbol	Parameter	Test conditions	Min.	Typ.	Max.	Unit
$t_{d(on)}$	Turn-on delay time	R_L= 13Ω (see *Figure 6.*)		15		µs
$t_{d(off)}$	Turn-off delay time	R_L= 13Ω (see *Figure 6.*)		15		µs
$dV_{OUT}/dt_{(on)}$	Turn-on voltage slope	R_L= 13Ω		See *Figure 26.*		V/µs
$dV_{OUT}/dt_{(off)}$	Turn-off voltage slope	R_L= 13Ω		See *Figure 28.*		V/µs
W_{ON}	Switching energy losses during t_{won}	R_L= 13Ω (see *Figure 6.*)		0.05		mJ
W_{OFF}	Switching energy losses during t_{woff}	R_L= 13Ω (see *Figure 6.*)		0.03		mJ

Table 7. Status pin (V_{SD}=0)

Symbol	Parameter	Test conditions	Min.	Typ.	Max.	Unit
V_{STAT}	Status low output voltage	I_{STAT}= 1.6 mA, V_{SD}=0V			0.5	V
I_{LSTAT}	Status leakage current	Normal operation or V_{SD}=5V, V_{STAT}= 5V			10	µA

chanhvinh.com

Table 7. Status pin (V_{SD}=0)

Symbol	Parameter	Test conditions	Min.	Typ.	Max.	Unit
C_{STAT}	Status pin input capacitance	Normal operation or V_{SD}=5V, V_{STAT}= 5V			100	pF
V_{SCL}	Status clamp voltage	I_{STAT} = 1mA I_{STAT} = -1mA	5.5	 -0.7	7	V V

Table 8. Protection(1)

Symbol	Parameter	Test conditions	Min.	Typ.	Max.	Unit
I_{limH}	DC short circuit current	V_{CC}=13V; 5V<V_{CC}<28V	7	10	14 14	A A
I_{limL}	Short circuit current during thermal cycling	V_{CC}=13V; T_R<T_j<T_{TSD}		2.5		A
T_{TSD}	Shutdown temperature		150	175	200	°C
T_R	Reset temperature		T_{RS} + 1	T_{RS} + 5		°C
T_{RS}	Thermal reset of STATUS		135			°C
T_{HYST}	Thermal hysteresis (T_{TSD}-T_R)			7		°C
t_{SDL}	Status delay in overload conditions	T_j>T_{TSD} (see *Figure 4.*)			20	µs
V_{DEMAG}	Turn-off output voltage clamp	I_{OUT}=1A; V_{IN}=0; L=20mH	V_{CC}-41	V_{CC}-46	V_{CC}-52	V
V_{ON}	Output voltage drop limitation	I_{OUT}=0.03A (see *Figure 5.*) T_j= -40°C...+150°C		25		mV

1. To ensure long term reliability under heavy overload or short circuit conditions, protection and related diagnostic signals must be used together with a proper software strategy. If the device is subjected to abnormal conditions, this software must limit the duration and number of activation cycles.

Table 9. Openload detection (8V<V_{CC}<18V)

Symbol	Parameter	Test conditions	Min.	Typ.	Max.	Unit
I_{OL}	Openload on-state detection threshold	V_{IN} = 5V	10		40	mA
$t_{DOL(on)}$	Openload on-state detection delay	I_{OUT} = 0A, V_{CC}=13V (see *Figure 4.*)			200	µs
t_{POL}	Delay between INPUT falling edge and STATUS rising edge in Openload condition	I_{OUT} = 0A (see *Figure 4.*)	200	500	1200	µs
V_{OL}	Openload off-state voltage detection threshold	V_{IN} = 0V	2		4	V
t_{DSTKON}	Output short circuit to V_{cc} detection delay at turn-off	See *Figure 4.*	180		t_{POL}	µs

chanhvinh.com

Table 9. Openload detection (8V<V_{CC}<18V)

Symbol	Parameter	Test conditions	Min.	Typ.	Max.	Unit
$I_{L(off2)}$	Off-state output current(1)	V_{IN}= 0V; V_{OUT}= 4V (see *Section 3.4: Open-load detection in off-state*)	-75		0	µA
td_vol	Delay response from output rising edge to STATUS falling edge in open load	V_{IN}= 0V; V_{OUT}= 4V			20	µs

1. For each channel.

Table 10. Logic input

Symbol	Parameter	Test conditions	Min.	Typ.	Max.	Unit
V_{IL}	Input low level				0.9	V
I_{IL}	Low level input current	V_{IN} = 0.9V	1			µA
V_{IH}	Input high level		2.1			V
I_{IH}	High level input current	V_{IN} = 2.1V			10	µA
$V_{I(hyst)}$	Input hysteresis voltage		0.25			V
V_{ICL}	Input clamp voltage	I_{IN} = 1mA I_{IN} = -1mA	5.5	 -0.7	7	V V
V_{SDL}	STAT_DIS low level voltage				0.9	V
I_{SDL}	Low level STAT_DIS current	V_{SD}=0.9V	1			µA
V_{SDH}	STAT_DIS high level voltage		2.1			V
I_{SDH}	High level STAT_DIS current	V_{SD}=2.1V			10	µA
$V_{SD(hyst)}$	STAT_DIS hysteresis voltage		0.25			V
V_{SDCL}	STAT_DIS clamp voltage	I_{SD}=1mA I_{SD}=-1mA	5.5	 -0.7	7	V V

chanhvinh.com

Figure 4. Status timings

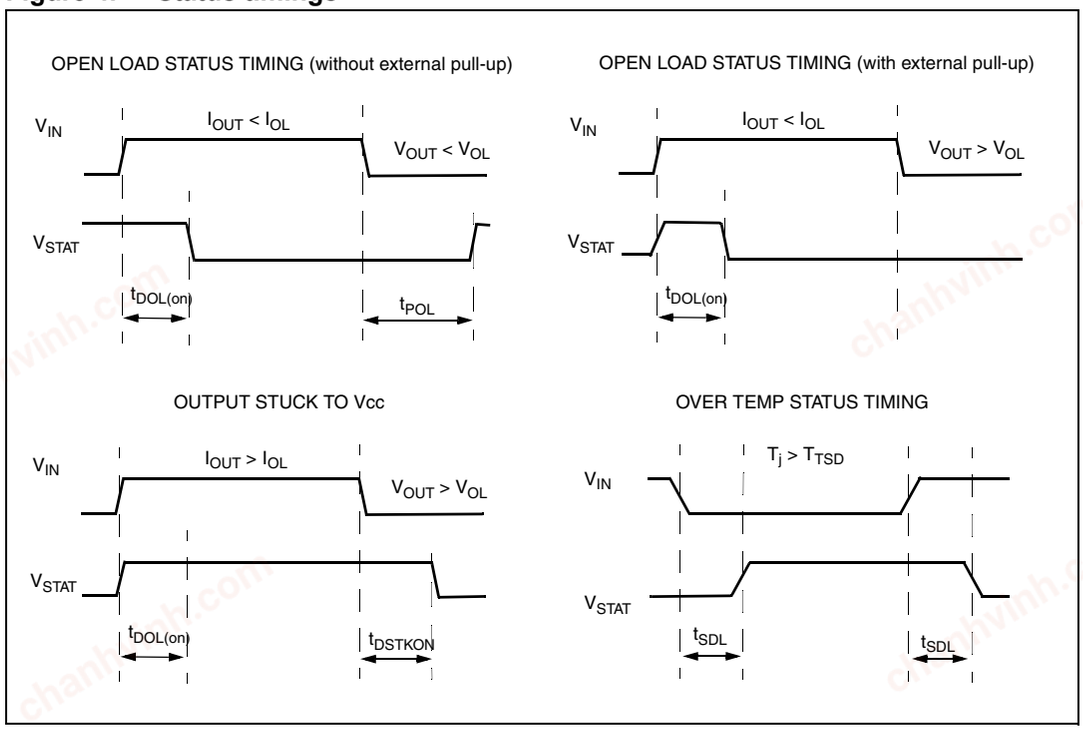

Figure 5. Output voltage drop limitation

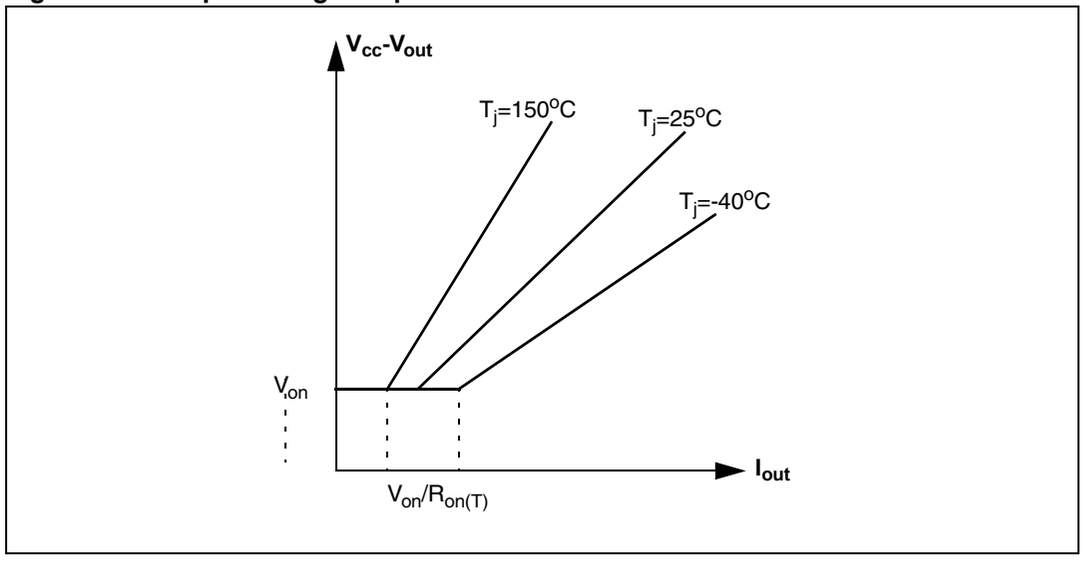

chanhvinh.com

Figure 6. Switching characteristics

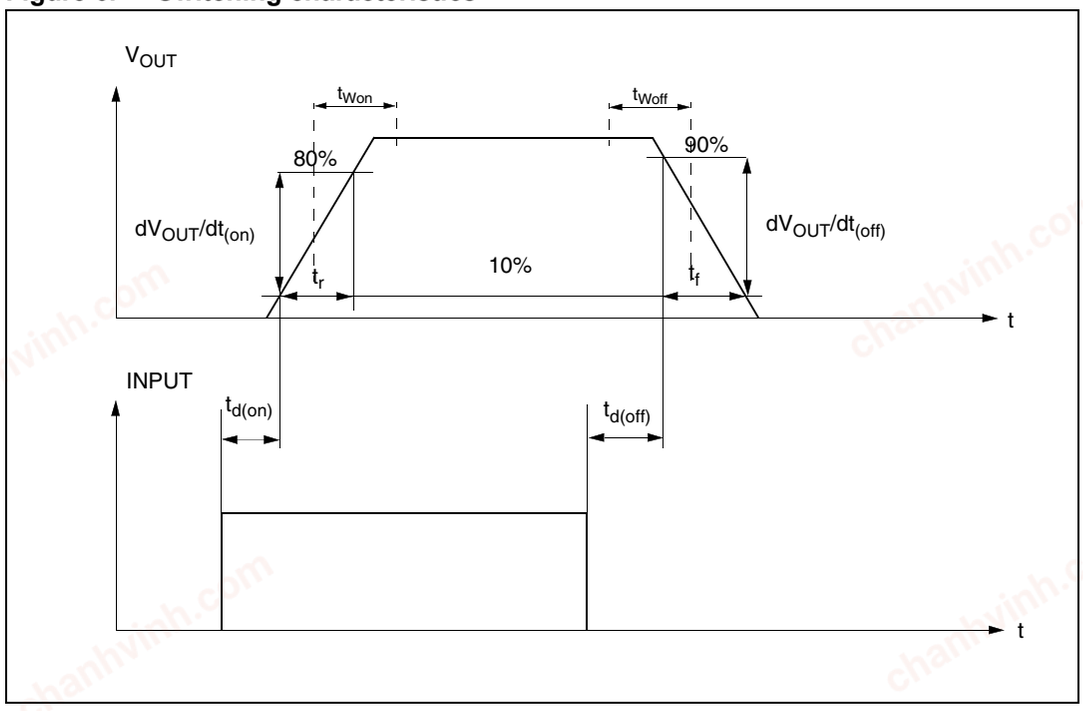

Table 11. Truth table

Conditions	INPUTn	OUTPUTn	STATUSn (V_{SD}=0V)(1)
Normal operation	L H	L H	H H
Over temperature	L H	L L	H L
Undervoltage	L H	L L	X X
Overload & Short circuit to GND	H H	X (no power limitation) Cycling (power limitation)	H L
Output voltage > V_{OL}	L H	H H	L(2) H
Output current < I_{OL}	L H	L H	H(3) L

1. If the V_{SD} is high, the STATUS pin is in a high impedance.
2. The STATUS pin is low with a delay equal to t_{DSTKON} after INPUT falling edge.
3. The STATUS pin becomes high with a delay equal to t_{POL} after INPUT falling edge.

chanhvinh.com

Table 12. Electrical transient requirements (part 1/3)

ISO 7637-2: 2004(E) Test pulse	Test levels		Number of pulses or test times	Burst cycle / pulse repetition time		Delays and Impedance
	III	IV				
1	-75 V	-100 V	5000 pulses	0.5 s	5 s	2 ms, 10 Ω
2a	+37 V	+50 V	5000 pulses	0.2 s	5 s	50 µs, 2 Ω
3a	-100 V	-150 V	1h	90 ms	100 ms	0.1 µs, 50 Ω
3b	+75 V	+100 V	1h	90 ms	100 ms	0.1 µs, 50 Ω
4	-6 V	-7 V	1 pulse			100 ms, 0.01 Ω
5b(2)	+65 V	+87 V	1 pulse			400 ms, 2 Ω

Table 13. Electrical transient requirements (part 2/3)

ISO 7637-2: 2004(E) Test pulse	Test level results(1)	
	III	IV
1	C	C
2a	C	C
3a	C	C
3b	C	C
4	C	C
5b(2)	C	C

1. The above test levels must be considered referred to V_{CC} = 13.5V except for pulse 5b.
2. Valid in case of external load dump clamp: 40V maximum referred to ground.

Table 14. Electrical transient requirements (part 3/3)

Class	Contents
C	All functions of the device are performed as designed after exposure to disturbance.
E	One or more functions of the device are not performed as designed after exposure to disturbance and cannot be returned to proper operation without replacing the device.

chanhvinh.com

2.4 Waveforms

Figure 7. Normal operation

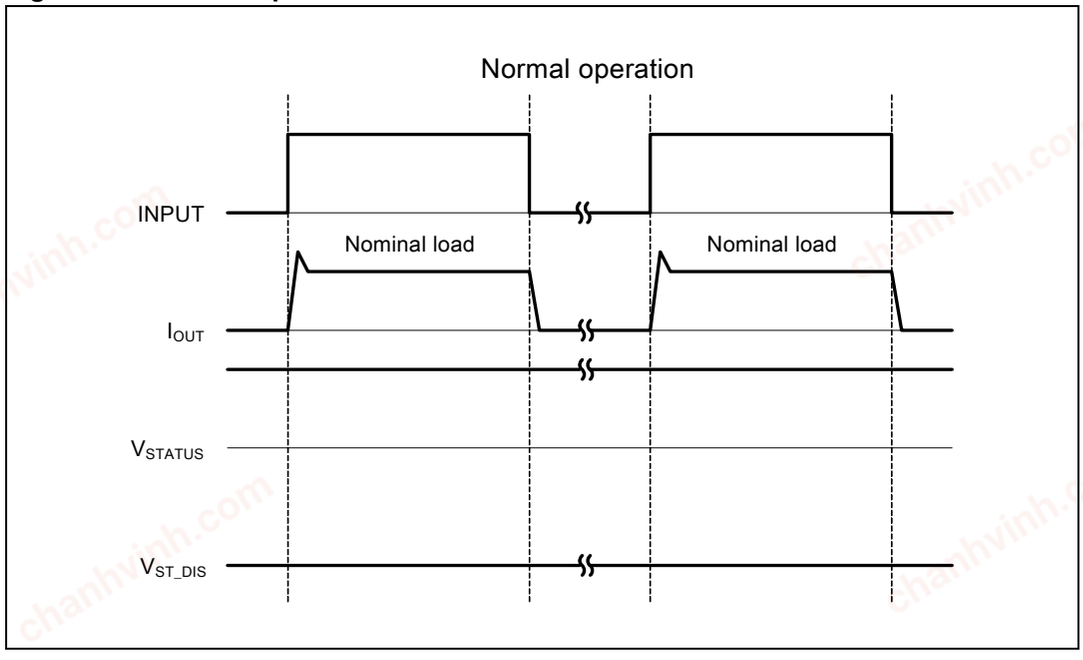

Figure 8. Undervoltage shut-down

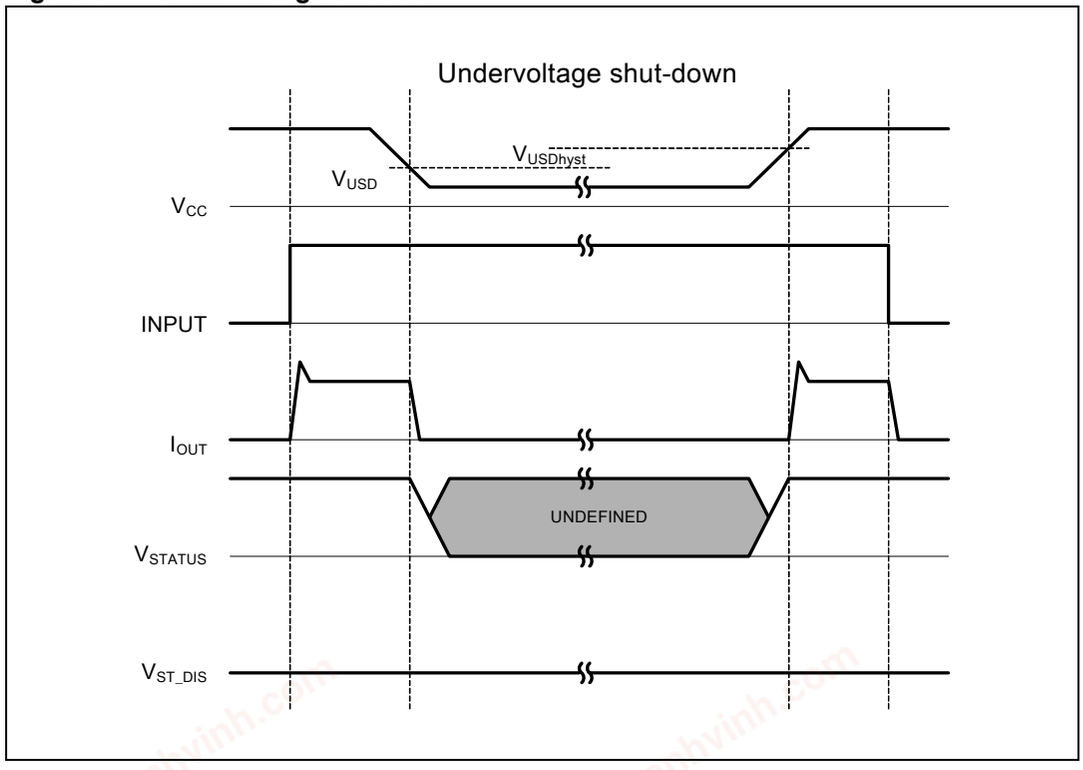

chanhvinh.com

Figure 9. Overload or Short to GND

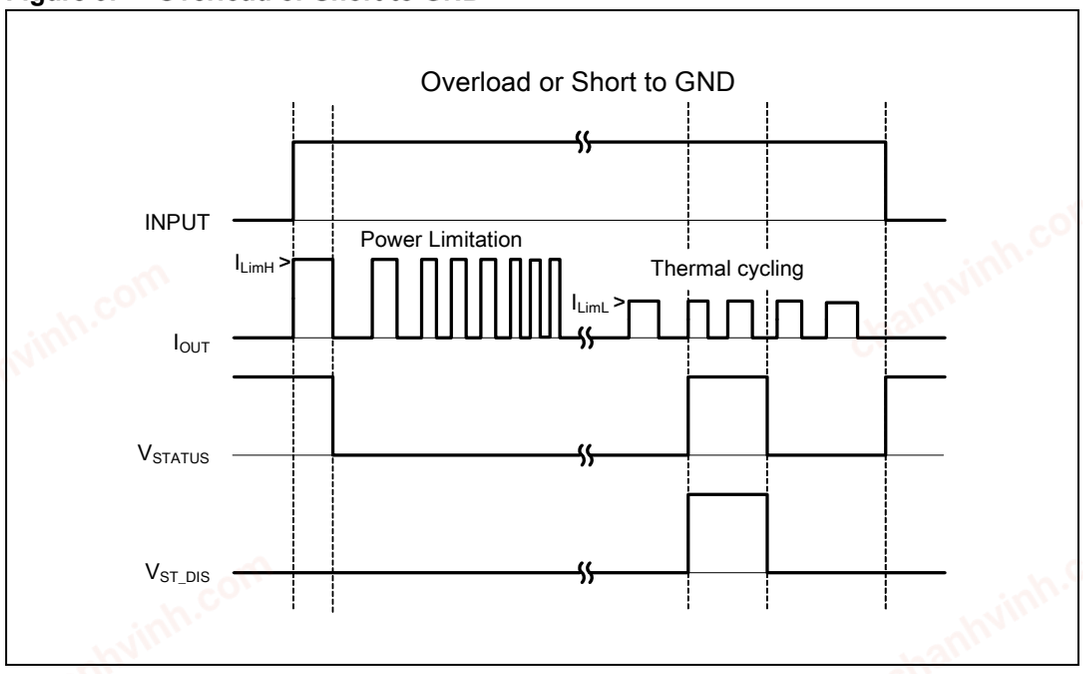

Figure 10. Intermittent Overload

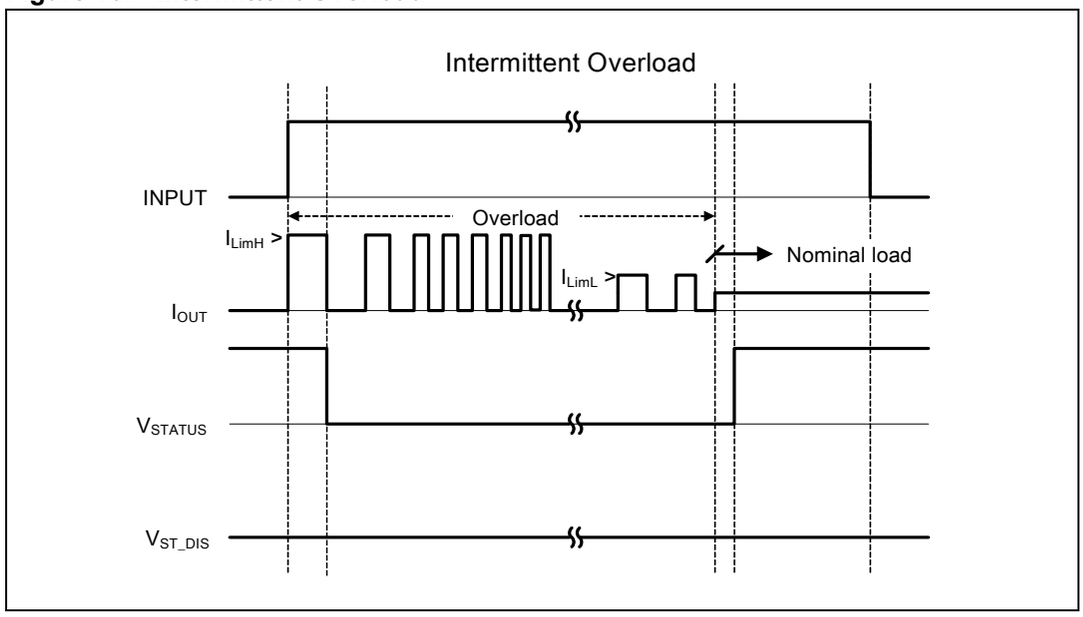

chanhvinh.com

Figure 11. Open Load with external pull-up

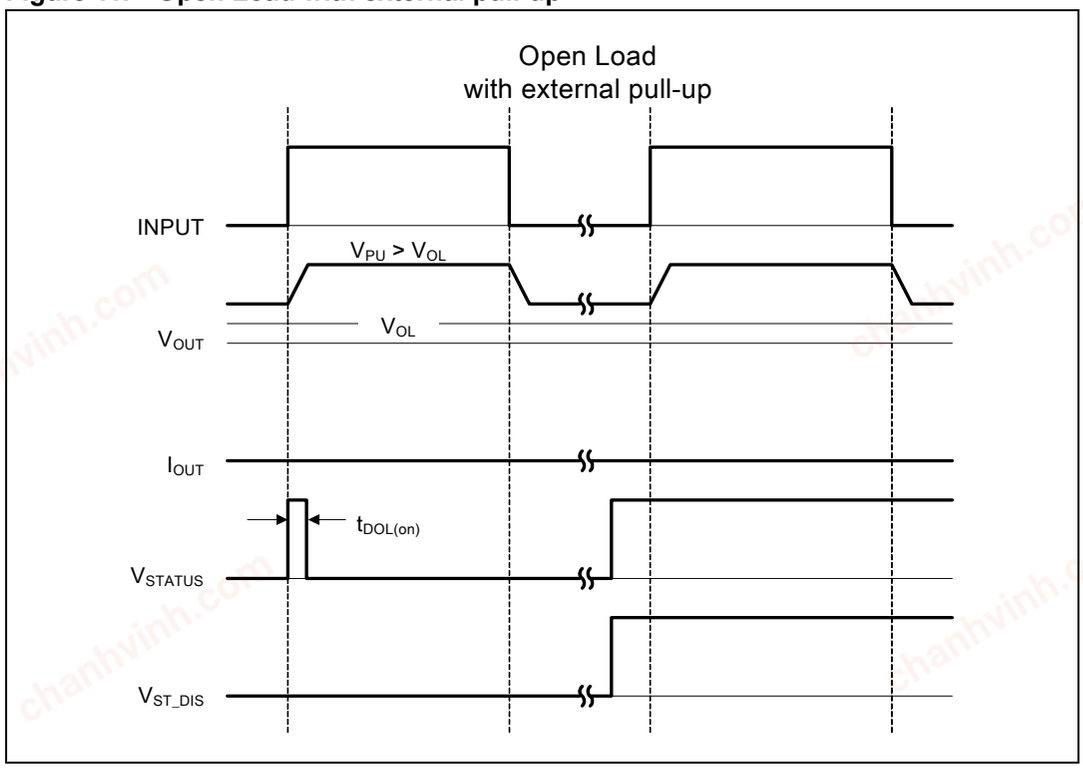

Figure 12. Open Load without external pull-up

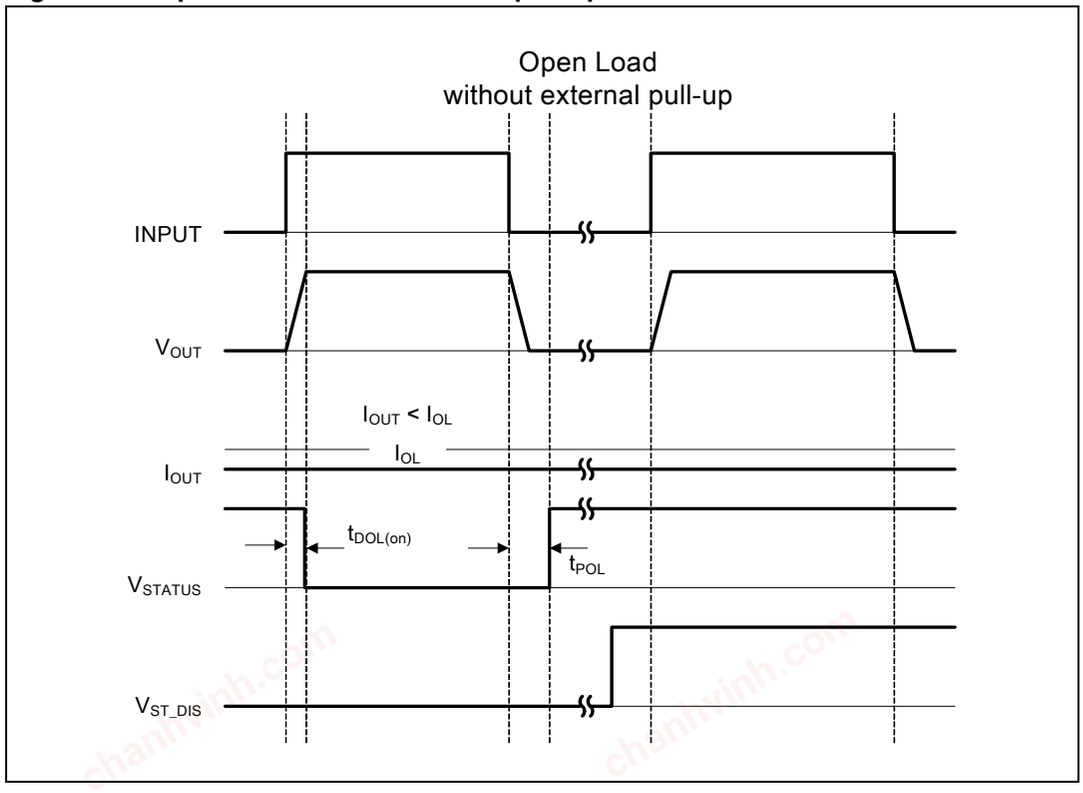

chanhvinh.com

Figure 13. Short to V_{CC}

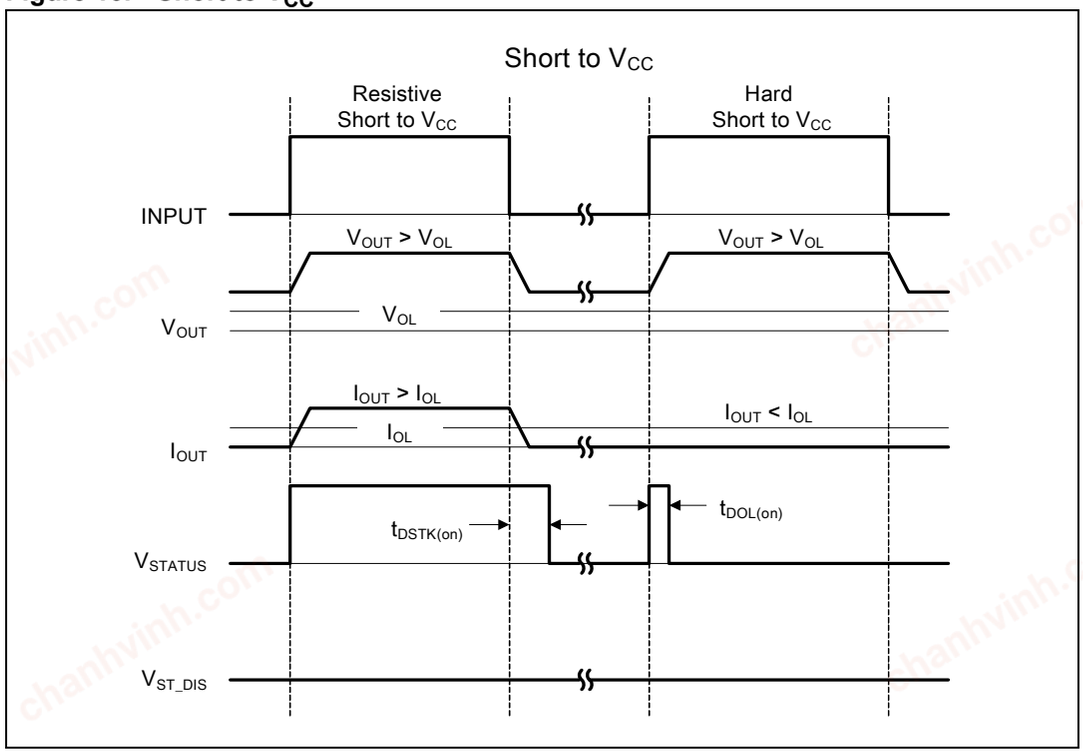

Figure 14. T_J evolution in Overload or Short to GND

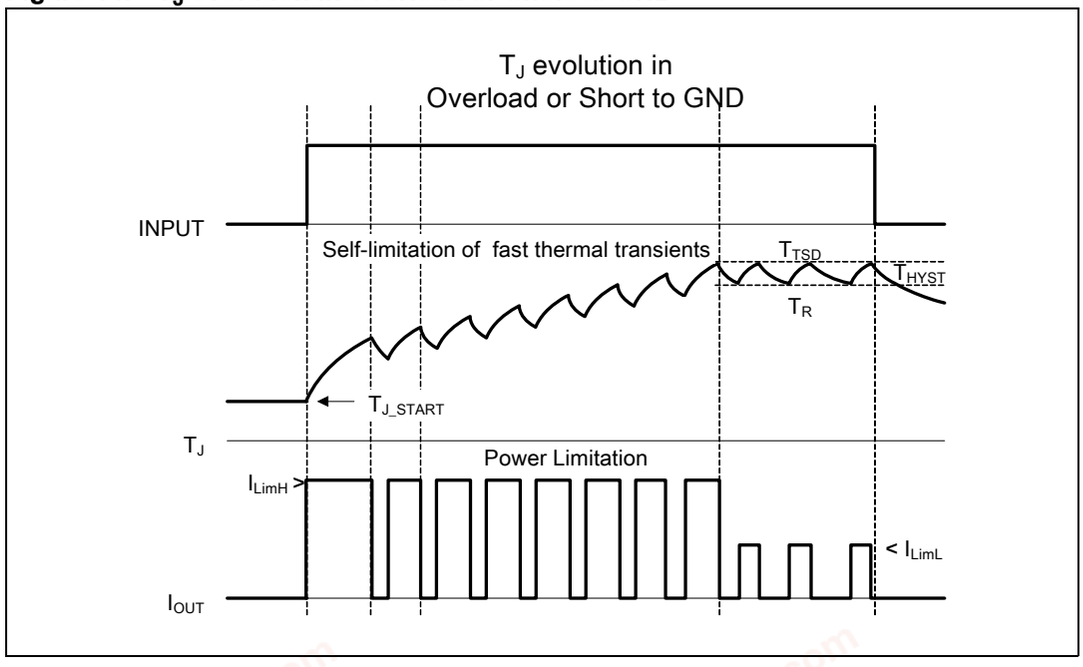

chanhvinh.com

2.5 Electrical characteristics curves

Figure 15. Off-state output current

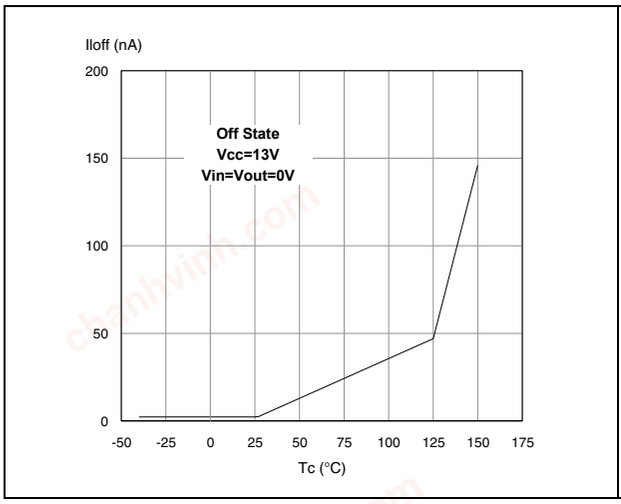

Figure 16. High level input current

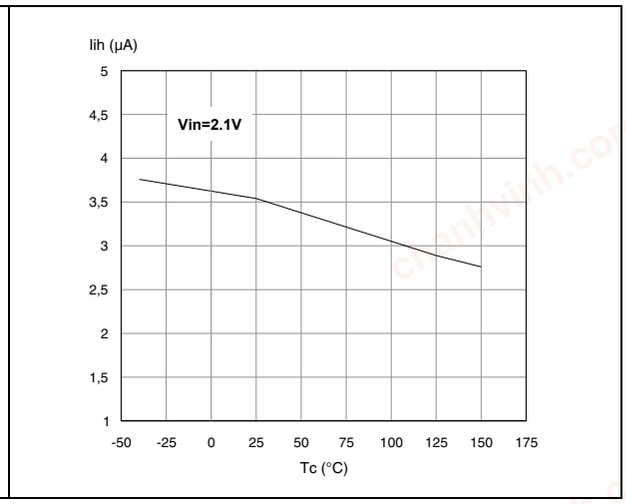

Figure 17. Input clamp voltage

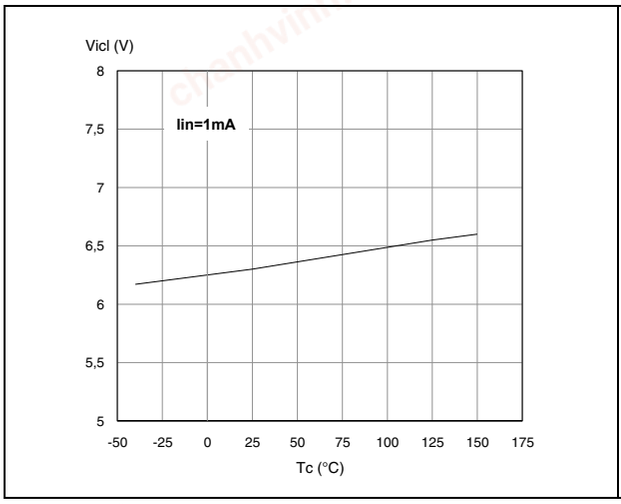

Figure 18. Input high level

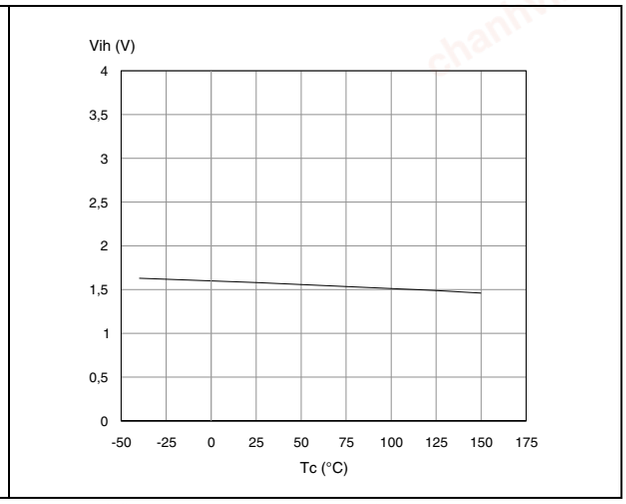

Figure 19. Input low level

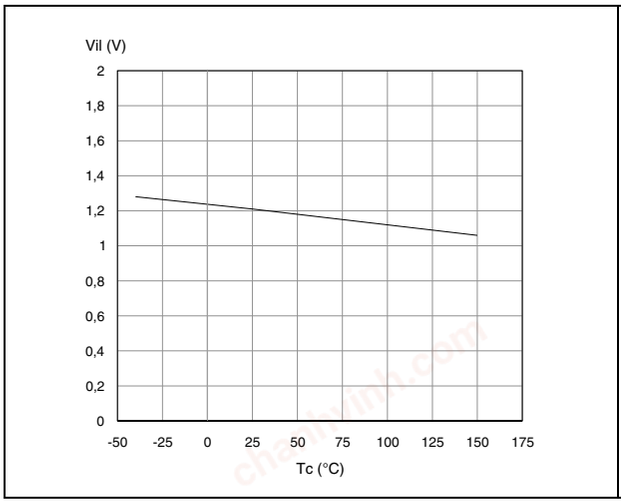

Figure 20. Low level STAT_DIS current

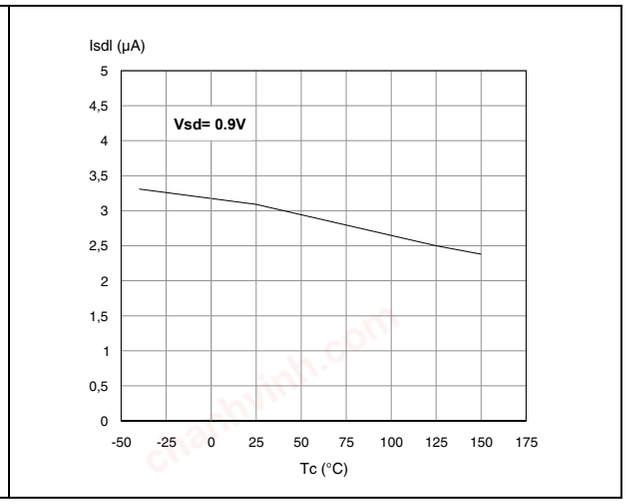

chanhvinh.com

Figure 21. On-state resistance vs T_{case}

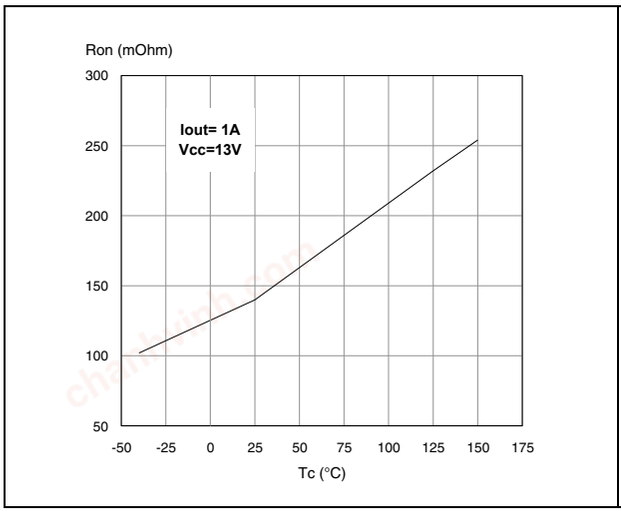

Figure 22. High level STAT_DIS current

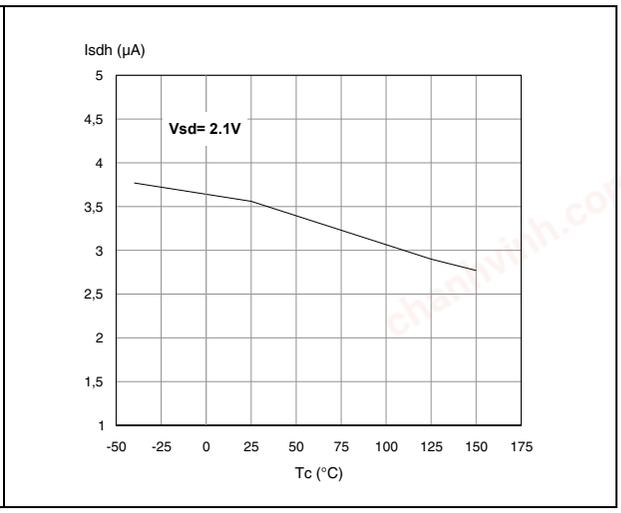

Figure 23. On-state resistance vs V_{CC}

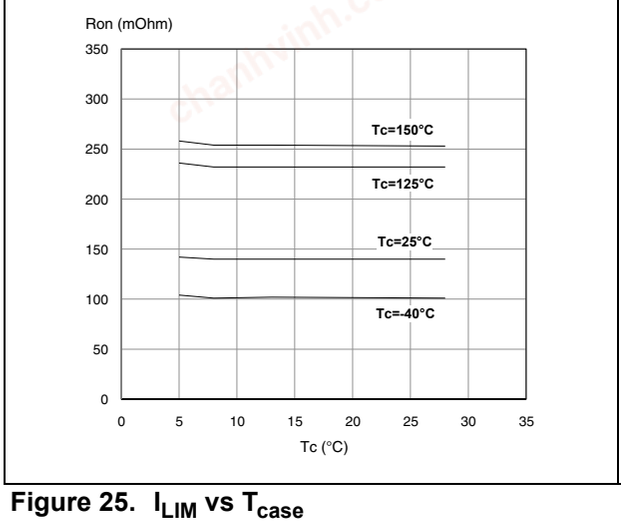

Figure 24. Low level input current

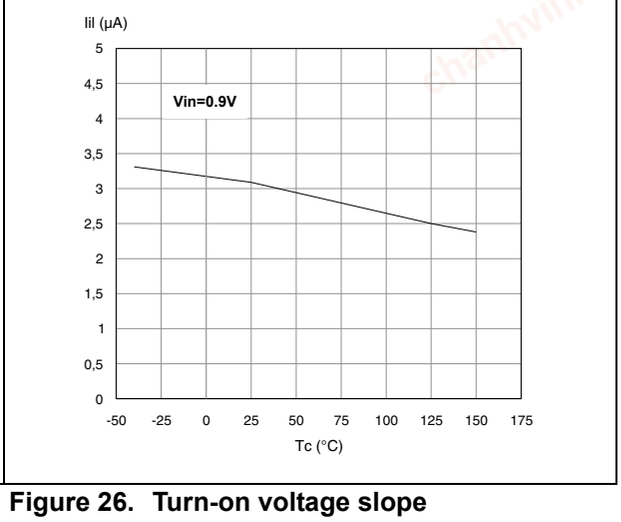

Figure 25. I_{LIM} vs T_{case}

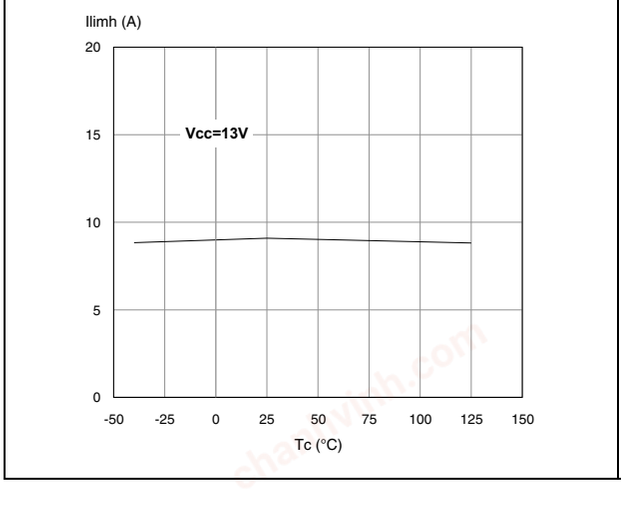

Figure 26. Turn-on voltage slope

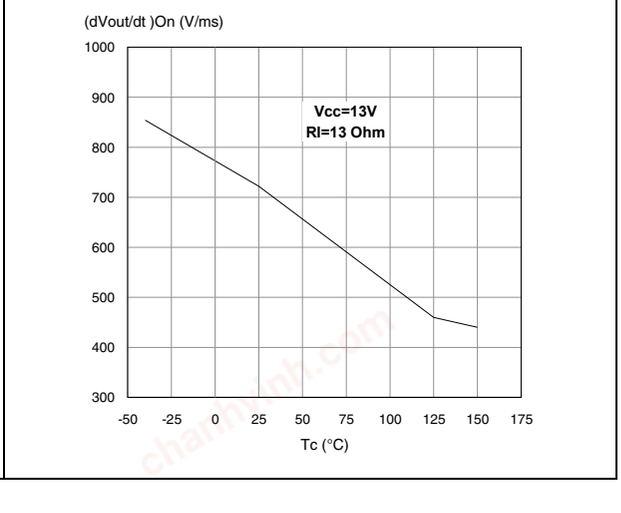

chanhvinh.com

Figure 27. Undervoltage shutdown

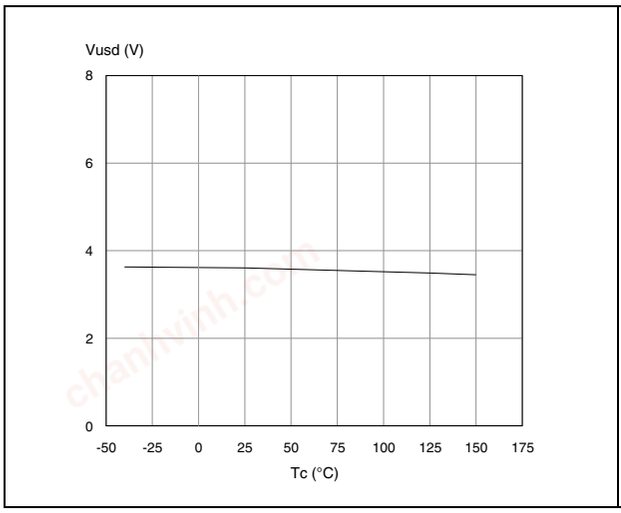

Figure 28. Turn-off voltage slope

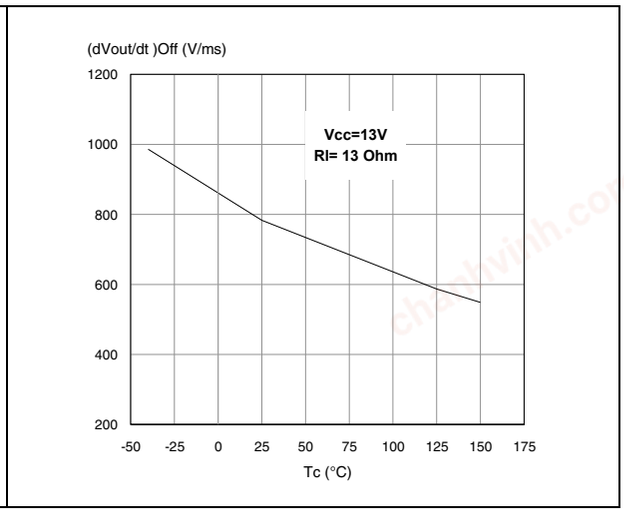

Figure 29. STAT_DIS clamp voltage

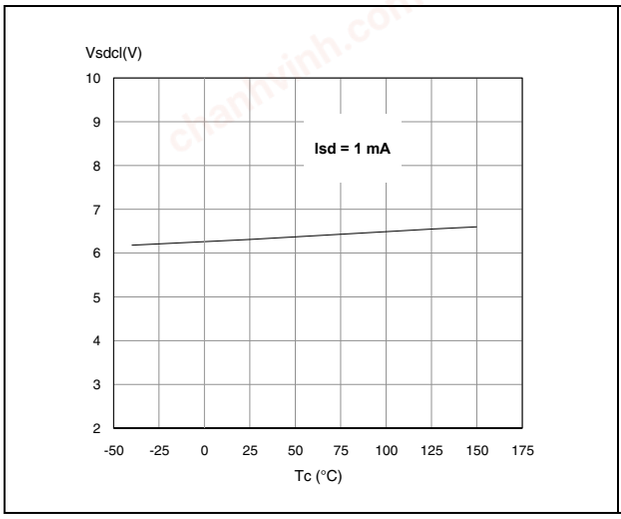

Figure 30. High level STAT_DIS voltage

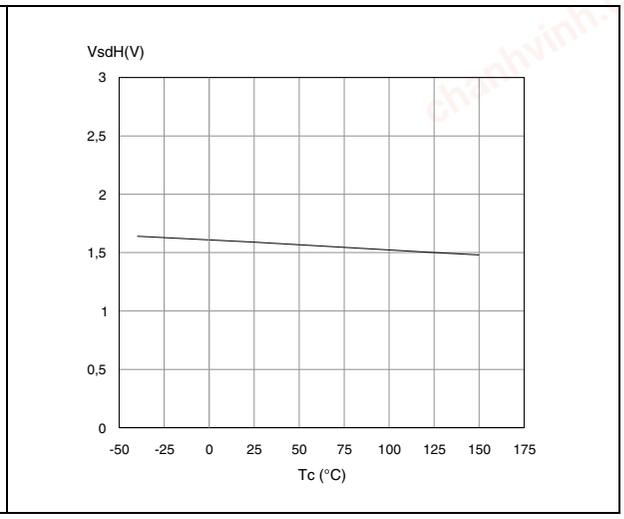

Figure 31. Low level STAT_DIS voltage

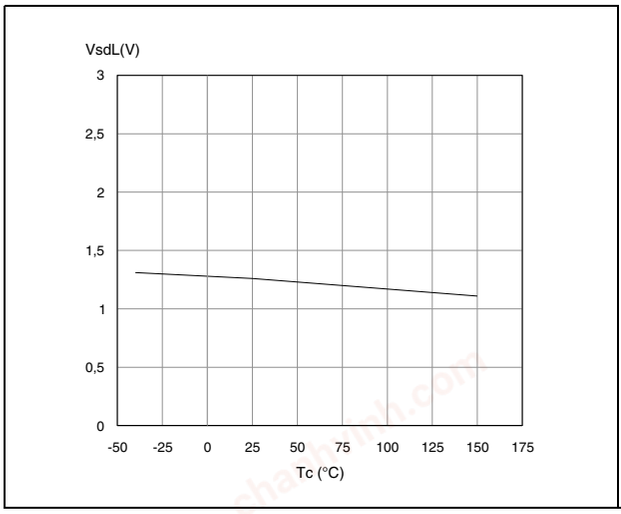

chanhvinh.com

3 Application information

Figure 32. Application schematic

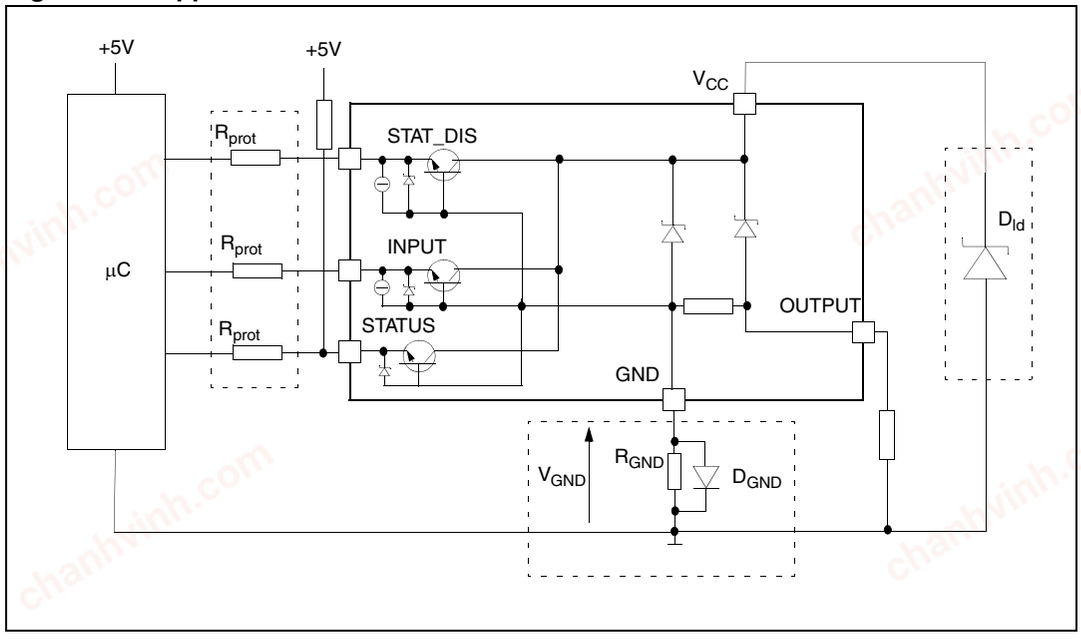

Note: Channels 2, 3 and 4 have the same internal circuit as channel 1.

3.1 GND protection network against reverse battery

3.1.1 Solution 1: resistor in the ground line (R_{GND} only)

This solution can be used with any type of load.

The following is an indication on how to dimension the R_{GND} resistor.

1. $R_{GND} \leq 600mV / (I_{S(on)max})$.
2. $R_{GND} \geq (-V_{CC}) / (-I_{GND})$

where $-I_{GND}$ is the DC reverse ground pin current and can be found in the absolute maximum rating section of the device datasheet.

Power dissipation in R_{GND} (when $V_{CC}<0$: during reverse battery situations) is:

$P_D= (-V_{CC})^2/R_{GND}$

This resistor can be shared amongst several different HSDs. Please note that the value of this resistor should be calculated with formula (1) where $I_{S(on)max}$ becomes the sum of the maximum On-state currents of the different devices.

Please note that if the microprocessor ground is not shared by the device ground then the R_{GND} will produce a shift ($I_{S(on)max} * R_{GND}$) in the input thresholds and the status output values. This shift will vary depending on how many devices are ON in the case of several high side drivers sharing the same R_{GND}.

chanhvinh.com

If the calculated power dissipation leads to a large resistor or several devices have to share the same resistor then ST suggests that Solution 2 is used (see below).

3.1.2 Solution 2: diode (D_{GND}) in the ground line

A resistor (R_{GND}=1kΩ) should be inserted in parallel with D_{GND} if the device drives an inductive load.

This small signal diode can be safely shared amongst several different HSDs. Also in this case, the presence of the ground network will produce a shift (~600mV) in the input threshold and in the status output values if the microprocessor ground is not common with the device ground. This shift will not vary if more than one HSD shares the same diode/resistor network.

3.2 Load dump protection

D_{ld} is necessary (Voltage Transient Suppressor) if the load dump peak voltage exceeds to V_{CC} max DC rating. The same applies if the device is subject to transients on the V_{CC} line that are greater than the ones shown in the ISO T/R 7637/2 table.

3.3 MCU I/Os protection

If a ground protection network is used and negative transients are present on the V_{CC} line, the control pins will be pulled negative. ST suggests the insertion of resistors (R_{prot}) in the lines to prevent the µC I/Os pins from latching up.

The values of these resistors are a compromise between the leakage current of µC and the current required by the HSD I/Os (Input levels compatibility) with the latch-up limit of the µC I/Os.

$-V_{CCpeak}/I_{latchup} \leq R_{prot} \leq (V_{OH\mu C}-V_{IH}-V_{GND}) / I_{IHmax}$

Calculation example:

For V_{CCpeak}= - 100V and $I_{latchup} \geq$ 20mA; $V_{OH\mu C} \geq$ 4.5V

5kΩ ≤ R_{prot} ≤ 180kΩ.

Recommended R_{prot} value is 10kΩ.

chanhvinh.com

3.4 Open-load detection in off-state

Off-state open load detection requires an external pull-up resistor (R_{PU}) connected between the OUTPUT pin and a positive supply voltage (V_{PU}) like the +5V line used to supply the microprocessor.

The external resistor has to be selected according to the following requirements:

1. no false open load indication when load is connected: in this case we have to avoid V_{OUT} to be higher than V_{Olmin}; this results in the following condition:
   $V_{OUT}=(V_{PU}/(R_L+R_{PU}))R_L<V_{Olmin}$.
2. no misdetection when the load is disconnected: in this case the V_{OUT} has to be higher than V_{OLmax}; this results in the following condition:
   $R_{PU}<(V_{PU}–V_{OLmax}) / I_{L(off2)}$.

Because $I_{s(OFF)}$ may significantly increase if V_{out} is pulled high (up to several mA), the pull-up resistor R_{PU} should be connected to a supply that is switched OFF when the module is in standby.

The values of V_{OLmin}, V_{OLmax} and $I_{L(off2)}$ are available in the Electrical characteristics section.

Figure 33. Open load detection in off-state

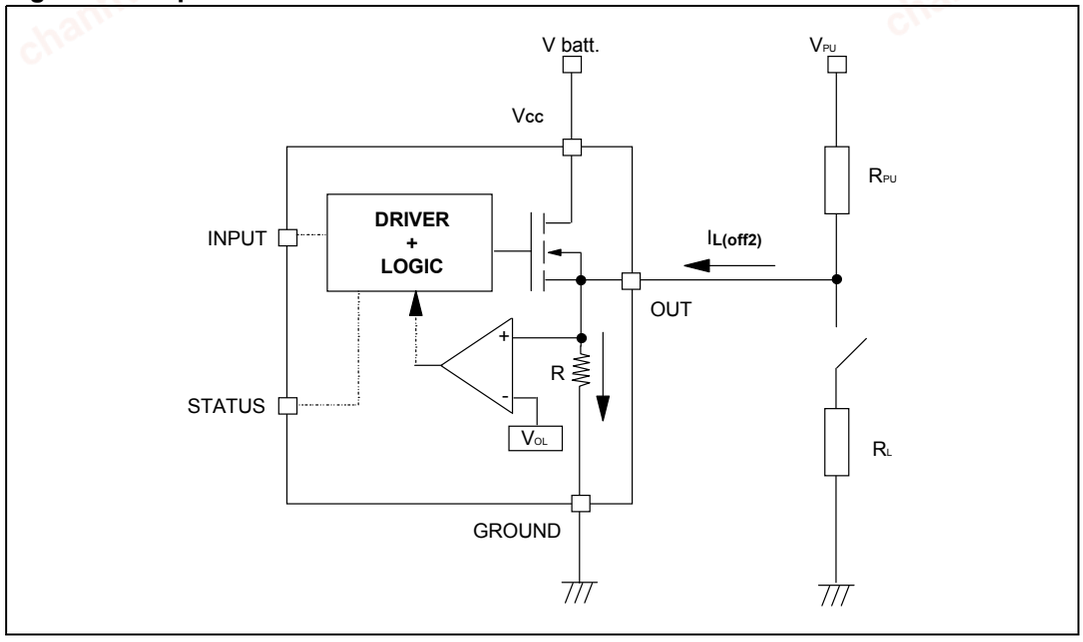

chanhvinh.com

3.5 Maximum demagnetization energy (V_{CC} = 13.5V)

Figure 34. Maximum turn-off current versus inductance (for each channel)

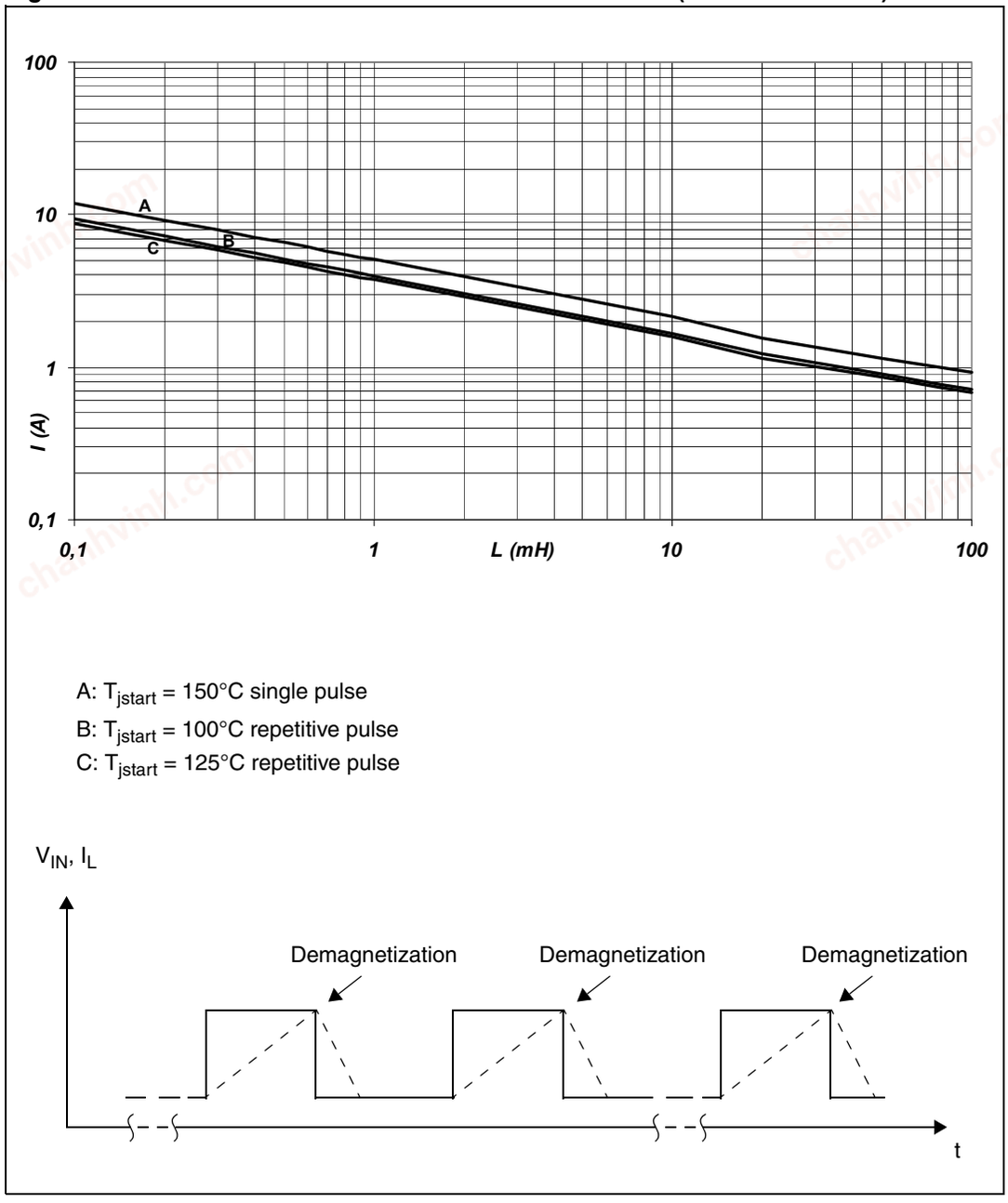

Note: Values are generated with R_L = 0 Ω.

In case of repetitive pulses, T_{jstart} (at beginning of each demagnetization) of every pulse must not exceed the temperature specified above for curves A and B.

chanhvinh.com

4 Package and PC board thermal data

4.1 PowerSSO-24 thermal data

Figure 35. PowerSSO-24 PC board

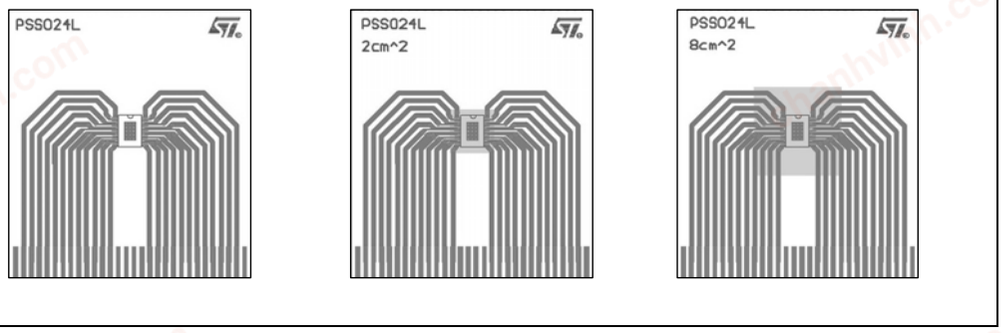

Note: Layout condition of R_{th} and Z_{th} measurements (PCB: Double layer, Thermal Vias, FR4 area= 77mm x 86mm, PCB thickness=1.6mm, Cu thickness=70mm (front and back side), Copper areas: from minimum pad lay-out to 8cm^2).

Figure 36. $R_{thj\text{-}amb}$ vs. PCB copper area in open box free air condition (one channel ON)

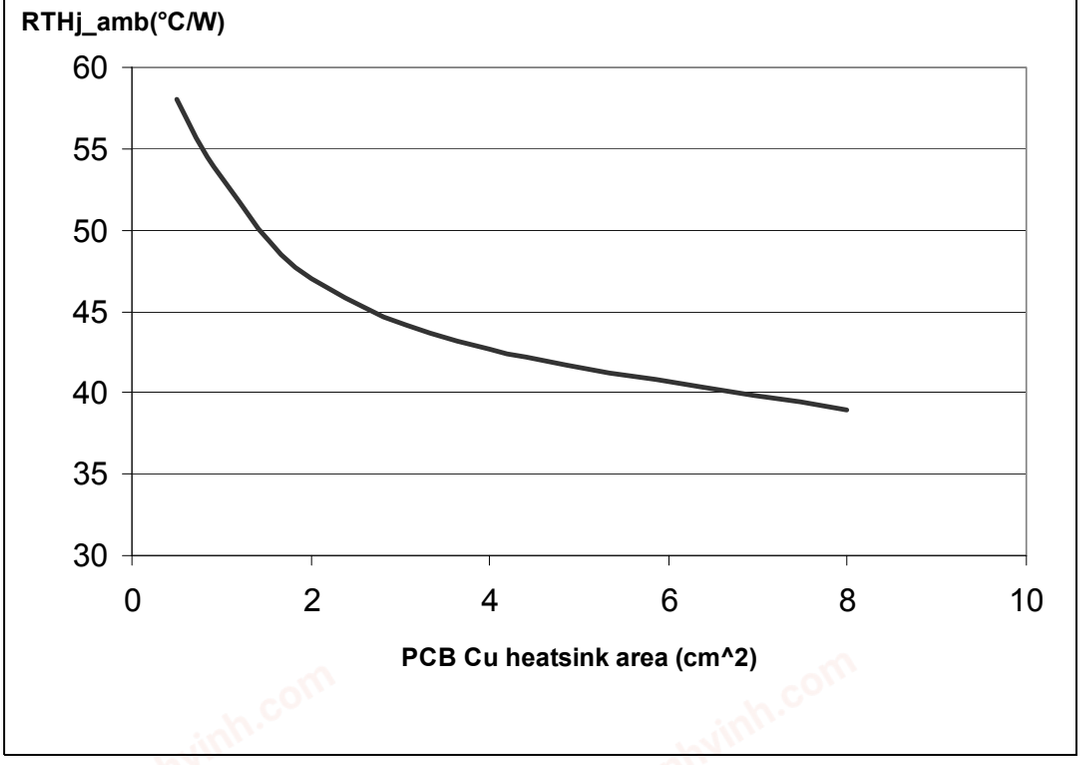

chanhvinh.com

Figure 37. PowerSSO-24 thermal impedance junction ambient single pulse (one channel ON)

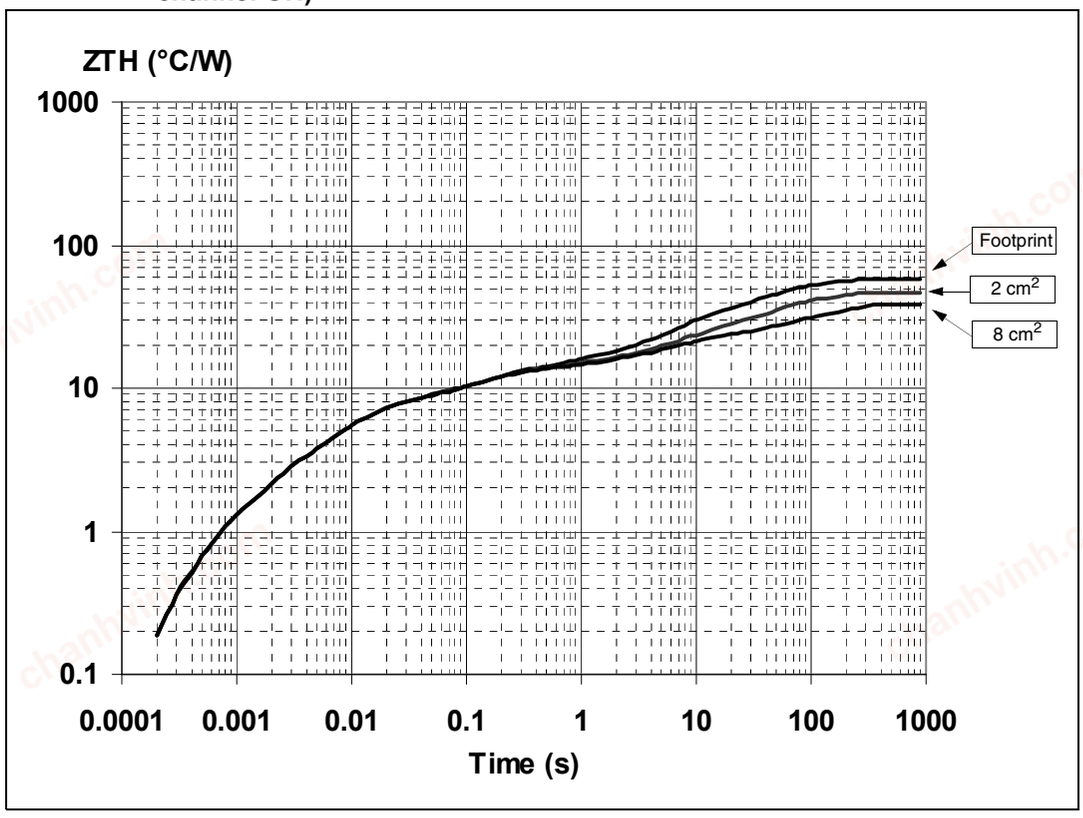

Figure 38. Thermal fitting model of a double channel HSD in PowerSSO-24(1)

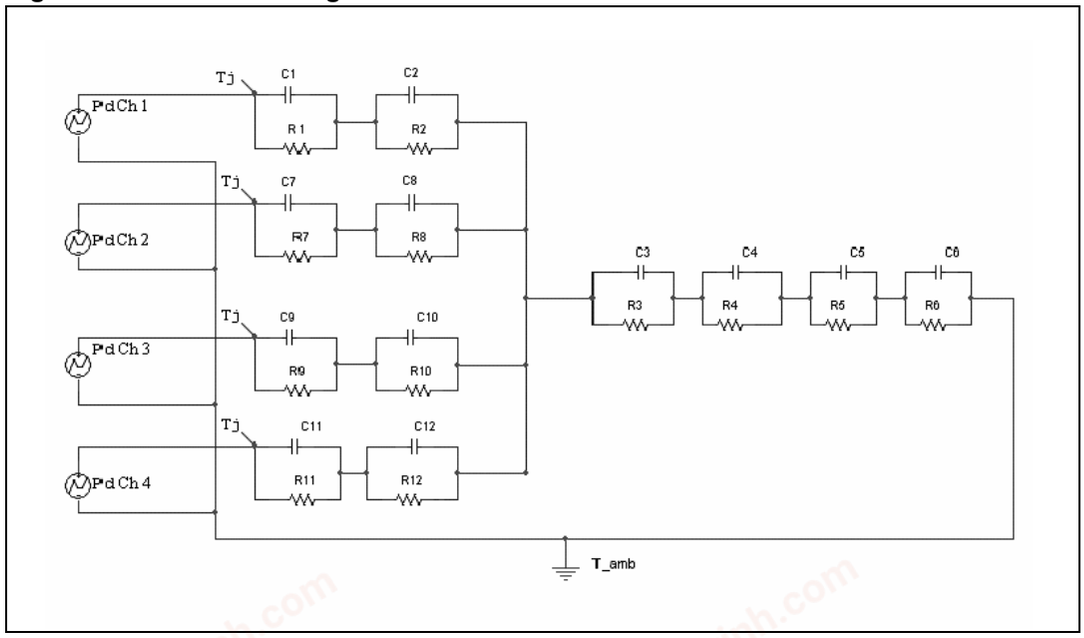

1. The fitting model is a simplified thermal tool and is valid for transient evolutions where the embedded protections (power limitation or thermal cycling during thermal shutdown) are not triggered.

chanhvinh.com

Equation 1: pulse calculation formula:

$$Z_{TH\delta} = R_{TH} \cdot \delta + Z_{THtp}(1 - \delta)$$

where $\delta = t_P/T$

Table 15. Thermal parameters

Area/island (cm^2)	Footprint	2	8
R1 = R7 = R9 = R11 (°C/W)	1.2		
R2 = R8 = R10 = R12 (°C/W)	6		
R3 (°C/W)	6		
R4 (°C/W)	7.7		
R5 (°C/W)	9	9	8
R6 (°C/W)	28	17	10
C1 = C7 = C9 = C11 (W.s/°C)	0.0008		
C2 = C8 = C10 = C12 (W.s/°C)	0.0016		
C3 (W.s/°C)	0.025		
C4 (W.s/°C)	0.75		
C5 (W.s/°C)	1	4	9
C6 (W.s/°C)	2.2	5	17

chanhvinh.com

5 Package and packing information

5.1 ECOPACK® packages

In order to meet environmental requirements, ST offers these devices in different grades of ECOPACK® packages, depending on their level of environmental compliance. ECOPACK® specifications, grade definitions and product status are available at: www.st.com.

ECOPACK® is an ST trademark.

5.2 PowerSSO-24 mechanical data

Figure 39. PowerSSO-24 package dimensions

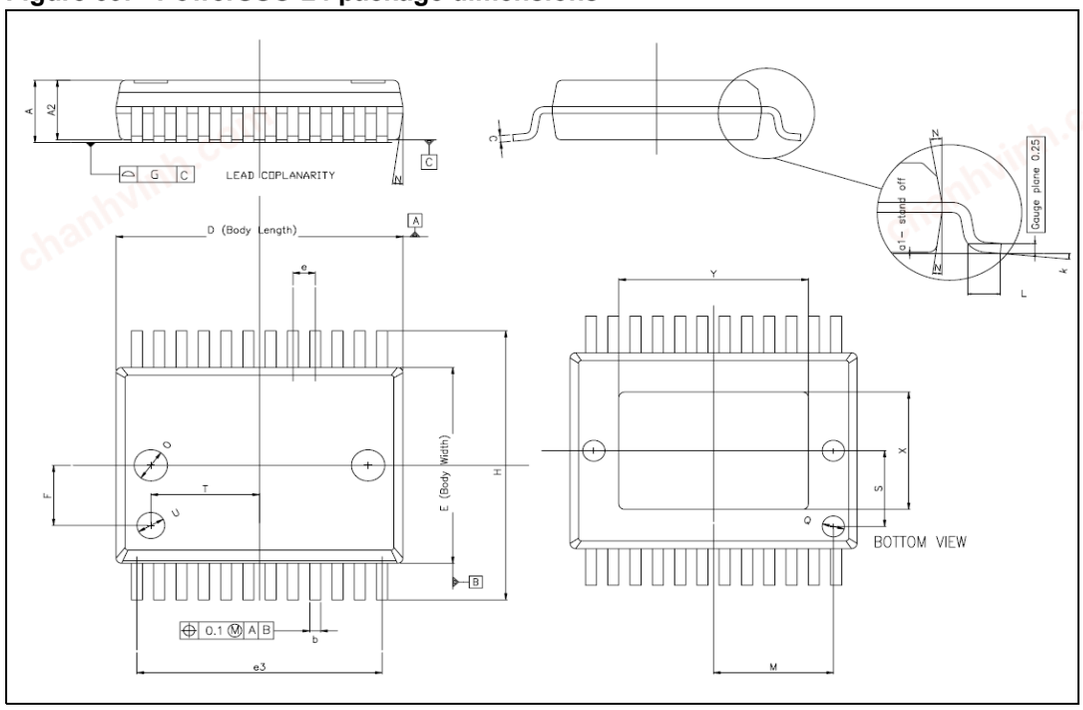

chanhvinh.com

Table 16. PowerSSO-24™ mechanical data

Symbol	Millimeters		
	Min	Typ	Max
A			2.45
A2	2.15		2.35
a1	0		0.1
b	0.33		0.51
c	0.23		0.32
D	10.10		10.50
E	7.4		7.6
e		0.8	
e3		8.8	
F		2.3	
G			0.1
H	10.1		10.5
h			0.4
k	0°		8°
L	0.55		0.85
O		1.2	
Q		0.8	
S		2.9	
T		3.65	
U		1.0	
N			10°
X	4.1		4.7
Y	6.5		7.1

chanhvinh.com

5.3 Packing information

Figure 40. PowerSSO-24 tube shipment (no suffix)

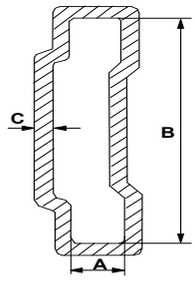

Base Q.ty	49
Bulk Q.ty	1225
Tube length (± 0.5)	532
A	3.5
B	13.8
C (± 0.1)	0.6

All dimensions are in mm.

Figure 41. PowerSSO-24 tape and reel shipment (suffix "TR")

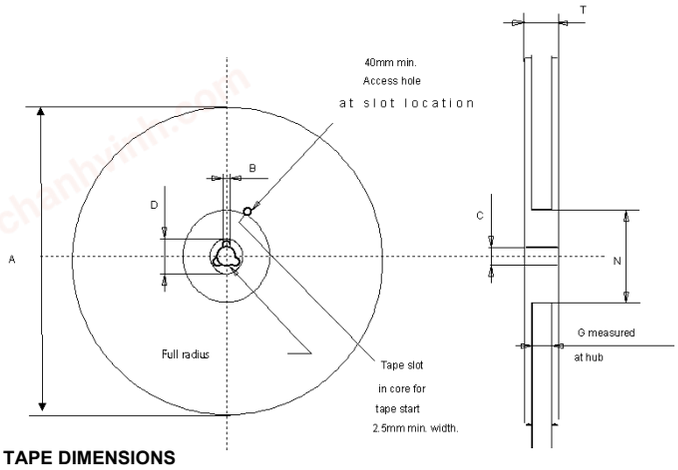

Reel dimensions

Base Q.ty	1000
Bulk Q.ty	1000
A (max)	330
B (min)	1.5
C (± 0.2)	13
F	20.2
G (+ 2 / -0)	24.4
N (min)	100
T (max)	30.4

All dimensions are in mm.

TAPE DIMENSIONS

According to Electronic Industries Association (EIA) Standard 481 rev. A, Feb 1986

Tape width	**W**	24
Tape Hole Spacing	**P0 (± 0.1)**	4
Component Spacing	**P**	12
Hole Diameter	**D (± 0.05)**	1.55
Hole Diameter	**D1 (min)**	1.5
Hole Position	**F (± 0.1)**	11.5
Compartment Depth	**K (max)**	2.85
Hole Spacing	**P1 (± 0.1)**	2

All dimensions are in mm.

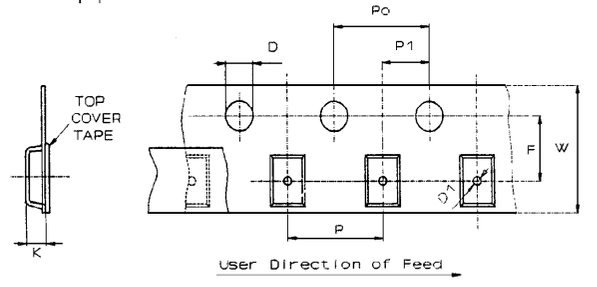

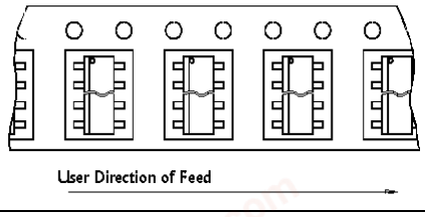

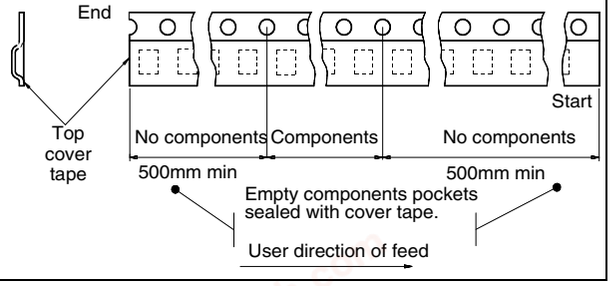

chanhvinh.com

6 Order codes

Table 17. Device summary

Package	Order codes	
	Tube	Tape and reel
PowerSSO-24	VNQ5E160K-E	VNQ5E160KTR-E

chanhvinh.com

7 Revision history

Table 18. Document revision history

Date	Revision	Changes
04-Feb-2008	1	Initial release.
24-Jun-2009	2	*Table 16: PowerSSO-24 mechanical data*: – Deleted A (min) value – Changed A (max) value from 2.47 to 2.45 – Changed A2 (max) value from 2.40 to 2.35 – Changed a1 (max) value from 0.075 to 0.1 – Added F and k rows
23-Jul-2009	3	Updated *Figure 39: PowerSSO-24 package dimensions*. Updated *Table 16: PowerSSO-24 mechanical data*: – Deleted G1 row – Added O, Q, S, T and U rows
19-Sep-2013	4	Updated Disclaimer

chanhvinh.com

Please Read Carefully:

Information in this document is provided solely in connection with ST products. STMicroelectronics NV and its subsidiaries (“ST”) reserve the right to make changes, corrections, modifications or improvements, to this document, and the products and services described herein at any time, without notice.

All ST products are sold pursuant to ST’s terms and conditions of sale.

Purchasers are solely responsible for the choice, selection and use of the ST products and services described herein, and ST assumes no liability whatsoever relating to the choice, selection or use of the ST products and services described herein.

No license, express or implied, by estoppel or otherwise, to any intellectual property rights is granted under this document. If any part of this document refers to any third party products or services it shall not be deemed a license grant by ST for the use of such third party products or services, or any intellectual property contained therein or considered as a warranty covering the use in any manner whatsoever of such third party products or services or any intellectual property contained therein.

UNLESS OTHERWISE SET FORTH IN ST’S TERMS AND CONDITIONS OF SALE ST DISCLAIMS ANY EXPRESS OR IMPLIED WARRANTY WITH RESPECT TO THE USE AND/OR SALE OF ST PRODUCTS INCLUDING WITHOUT LIMITATION IMPLIED WARRANTIES OF MERCHANTABILITY, FITNESS FOR A PARTICULAR PURPOSE (AND THEIR EQUIVALENTS UNDER THE LAWS OF ANY JURISDICTION), OR INFRINGEMENT OF ANY PATENT, COPYRIGHT OR OTHER INTELLECTUAL PROPERTY RIGHT.

ST PRODUCTS ARE NOT DESIGNED OR AUTHORIZED FOR USE IN: (A) SAFETY CRITICAL APPLICATIONS SUCH AS LIFE SUPPORTING, ACTIVE IMPLANTED DEVICES OR SYSTEMS WITH PRODUCT FUNCTIONAL SAFETY REQUIREMENTS; (B) AERONAUTIC APPLICATIONS; (C) AUTOMOTIVE APPLICATIONS OR ENVIRONMENTS, AND/OR (D) AEROSPACE APPLICATIONS OR ENVIRONMENTS. WHERE ST PRODUCTS ARE NOT DESIGNED FOR SUCH USE, THE PURCHASER SHALL USE PRODUCTS AT PURCHASER’S SOLE RISK, EVEN IF ST HAS BEEN INFORMED IN WRITING OF SUCH USAGE, UNLESS A PRODUCT IS EXPRESSLY DESIGNATED BY ST AS BEING INTENDED FOR “AUTOMOTIVE, AUTOMOTIVE SAFETY OR MEDICAL” INDUSTRY DOMAINS ACCORDING TO ST PRODUCT DESIGN SPECIFICATIONS. PRODUCTS FORMALLY ESCC, QML OR JAN QUALIFIED ARE DEEMED SUITABLE FOR USE IN AEROSPACE BY THE CORRESPONDING GOVERNMENTAL AGENCY.

Resale of ST products with provisions different from the statements and/or technical features set forth in this document shall immediately void any warranty granted by ST for the ST product or service described herein and shall not create or extend in any manner whatsoever, any liability of ST.

ST and the ST logo are trademarks or registered trademarks of ST in various countries.
Information in this document supersedes and replaces all information previously supplied.
The ST logo is a registered trademark of STMicroelectronics. All other names are the property of their respective owners.

© 2013 STMicroelectronics - All rights reserved

STMicroelectronics group of companies

Australia - Belgium - Brazil - Canada - China - Czech Republic - Finland - France - Germany - Hong Kong - India - Israel - Italy - Japan - Malaysia - Malta - Morocco - Philippines - Singapore - Spain - Sweden - Switzerland - United Kingdom - United States of America

www.st.com