chanhvinh.com

life.augmented

VNL5050N3-E
VNL5050S5-E

OMNIFET III
fully protected low-side driver

Datasheet - production data

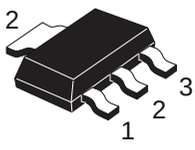

SOT-223

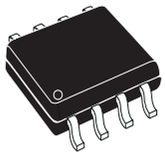

SO-8

Features

Type	V_{clamp}	$R_{DS(on)}$	I_D
VNL5050N3-E	41 V	50 mΩ	19 A
VNL5050S5-E			

- Automotive qualified
- Drain current: 19 A
- ESD protection
- Overvoltage clamp
- Thermal shutdown
- Current and power limitation
- Very low standby current
- Very low electromagnetic susceptibility
- Compliant with European directive 2002/95/EC
- Open drain status output (VNL5050S5-E only)

Description

The VNL5050N3-E and VNL5050S5-E are monolithic devices made using STMicroelectronics VIPower® Technology, intended for driving resistive or inductive loads with one side connected to the battery.

Built-in thermal shutdown protects the chip from overtemperature and short-circuit. Output current limitation protects the devices in an overload condition. In case of long duration overload, the devices limit the dissipated power to a safe level up to thermal shutdown intervention.Thermal shutdown, with automatic restart, allows the devices to recover normal operation as soon as a fault condition disappears. Fast demagnetization of inductive loads is achieved at turn-off.

Table 1. Devices summary

Package	Order codes	
	Tube	Tape and reel
SOT-223	VNL5050N3-E	VNL5050N3TR-E
SO-8	VNL5050S5-E	VNL5050S5TR-E

This is information on a product in full production. www.st.com

chanhvinh.com

Contents

1 Block diagrams and pins configurations 5

2 Absolute maximum rating 8

2.1 Absolute maximum ratings 8

2.2 Thermal data 8

3 Electrical characteristics 9

3.1 Electrical characteristics curves 12

3.2 MCU I/O protection 17

4 Package and PC board thermal data 19

4.1 SOT-223 thermal data 19

4.2 SO-8 thermal data 22

5 Package and packing information 25

5.1 ECOPACK® 25

5.2 SOT-223 mechanical data 25

5.3 SO-8 mechanical data 27

5.4 SOT-223 packing information 29

5.5 SO-8 packing information 30

6 Revision history 31

chanhvinh.com

List of tables

Table 1. Devices summary . . . 1
Table 2. Pin function . . . 6
Table 3. Suggested connections for unused and n.c. pins . . . 7
Table 4. Absolute maximum ratings . . . 8
Table 5. Thermal data . . . 8
Table 6. Power MOS section . . . 9
Table 7. Source drain diode . . . 9
Table 8. Input section . . . 9
Table 9. Status pin . . . 9
Table 10. Logic input . . . 10
Table 11. Openload detection . . . 10
Table 12. Supply section . . . 10
Table 13. Switching characteristics . . . 11
Table 14. Protection and diagnostics . . . 11
Table 15. Truth table . . . 14
Table 16. Thermal parameters . . . 21
Table 17. Thermal parameters . . . 24
Table 18. SOT-223 mechanical data . . . 26
Table 19. SO-8 mechanical data . . . 28
Table 20. Document revision history . . . 31

chanhvinh.com

List of figures

Figure 1. VNL5050N3-E block diagram . . . 5
Figure 2. VNL5050S5-E block diagram . . . 5
Figure 3. VNL5050N3-E current and voltage conventions . . . 6
Figure 4. VNL5050S5-E current and voltage conventions . . . 6
Figure 5. Configuration diagrams (top view) . . . 7
Figure 6. Source diode forward characteristics . . . 12
Figure 7. Static drain source on-resistance vs. drain current . . . 12
Figure 8. Static drain source on-resistance vs. input voltage . . . 12
Figure 9. Static drain source on-resistance vs. drain current . . . 12
Figure 10. Transfer characteristics . . . 13
Figure 11. Transfer characteristics (inside view for V_{IN} = 2 V to 3 V) . . . 13
Figure 12. Output characteristics . . . 13
Figure 13. Normalized on-resistance vs. temperature . . . 13
Figure 14. Normalized input threshold vs. temperature . . . 14
Figure 15. Switching characteristics . . . 15
Figure 16. VNL5050N3-E application schematic . . . 15
Figure 17. VNL5050S5-E application schematic . . . 16
Figure 18. Maximum demagnetization energy . . . 18
Figure 19. SOT-223 PC board . . . 19
Figure 20. Rthj-amb vs. PCB copper area in open box free air condition . . . 19
Figure 21. SOT-223 thermal impedance junction ambient single pulse . . . 20
Figure 22. Thermal fitting model of a LSD in SOT-223 . . . 20
Figure 23. SO-8 PC board . . . 22
Figure 24. Rthj-amb vs. PCB copper area in open box free air condition . . . 22
Figure 25. SO-8 thermal impedance junction ambient single pulse . . . 23
Figure 26. Thermal fitting model of a LSD in SO-8 . . . 23
Figure 27. SOT-223 package dimensions . . . 25
Figure 28. SO-8 package dimensions . . . 27
Figure 29. SOT-223 tape and reel shipment (suffix “TR”) . . . 29
Figure 30. SO-8 tube shipment (no suffix) . . . 30
Figure 31. SO-8 tape and reel shipment (suffix “TR”) . . . 30

chanhvinh.com

1 Block diagrams and pins configurations

Figure 1. VNL5050N3-E block diagram

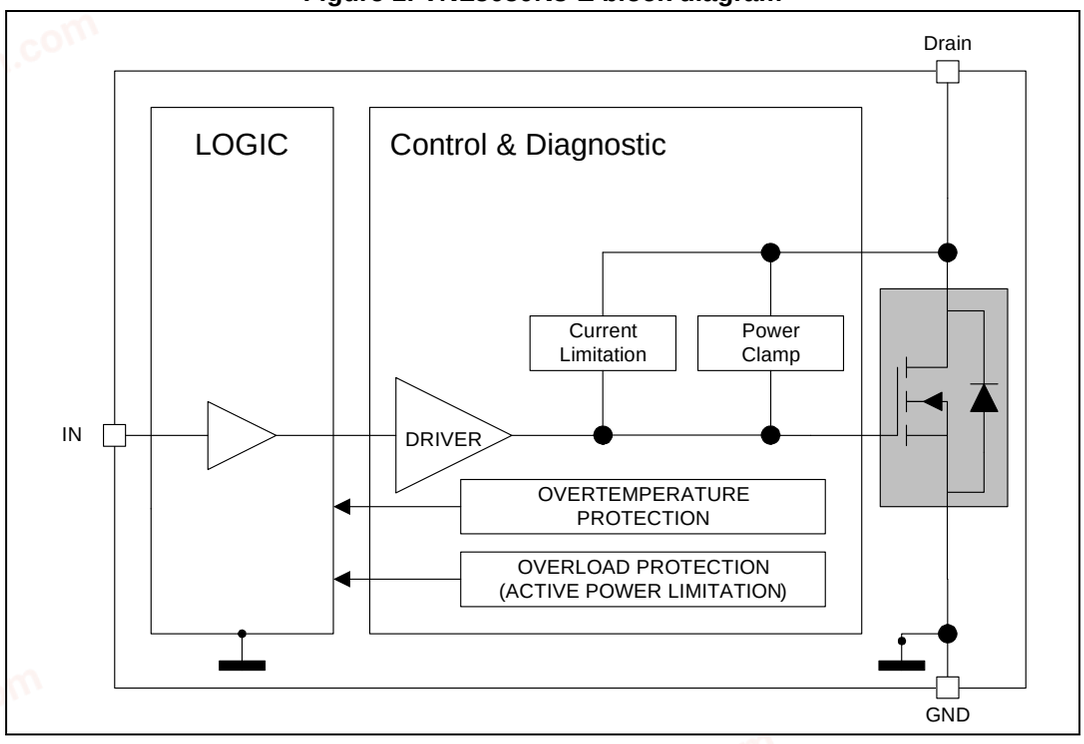

Figure 2. VNL5050S5-E block diagram

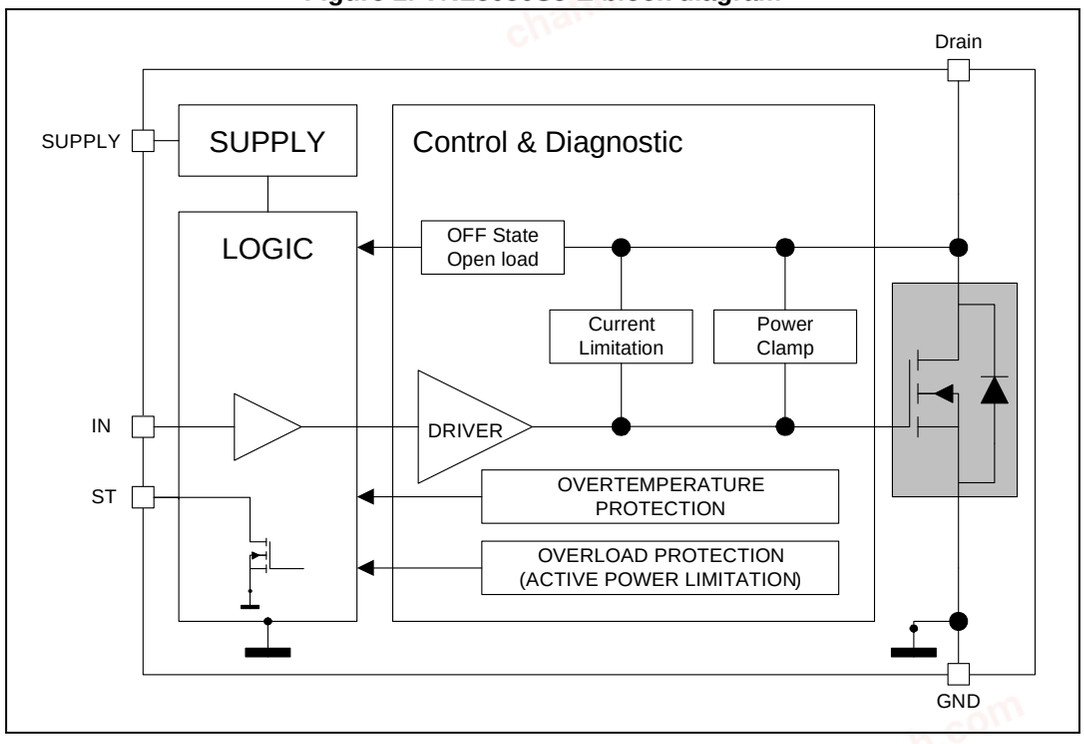

chanhvinh.com

Table 2. Pin function

Name	Function
INPUT	Voltage controlled input pin with hysteresis, CMOS compatible. Controls output switch state(1)
DRAIN	Power MOS drain
SOURCE	Power MOS source and ground reference for the control section
SUPPLY VOLTAGE	Supply voltage connected to the signal part (5 V)
STATUS	Open drain digital diagnostic pin(2)

1. Internally connected to V_{supply} in the VNL5050N3-E
2. Valid for VNL5050S5-E only.

Figure 3. VNL5050N3-E current and voltage conventions

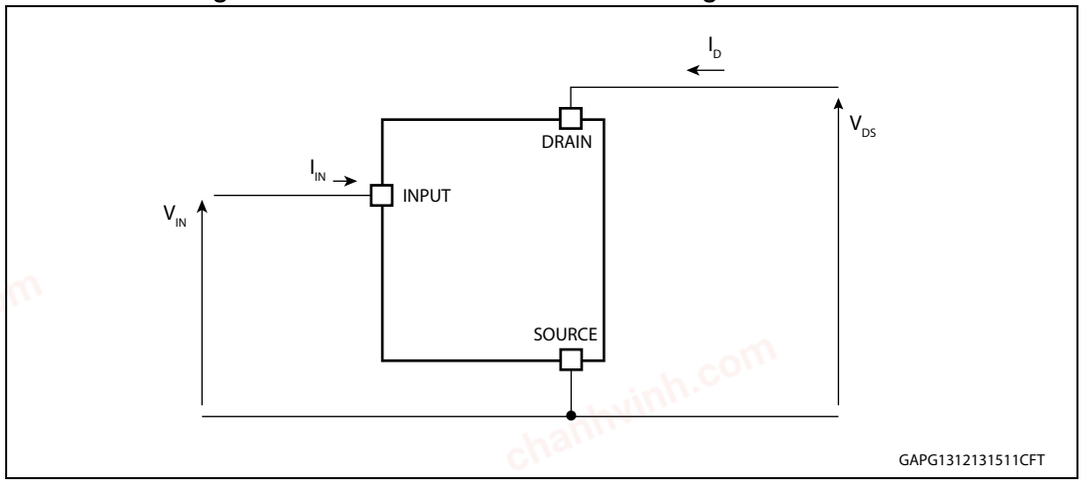

Figure 4. VNL5050S5-E current and voltage conventions

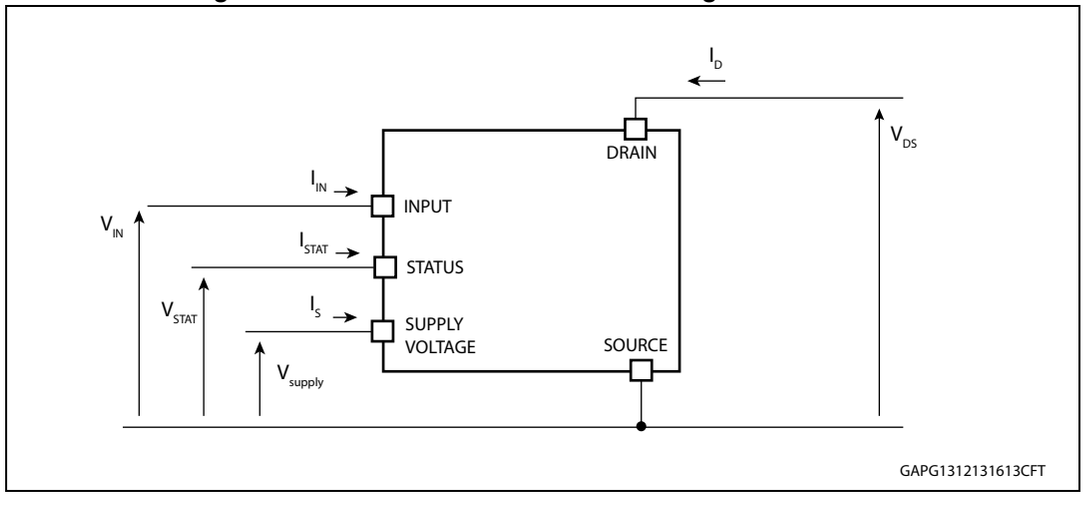

chanhvinh.com

Figure 5. Configuration diagrams (top view)

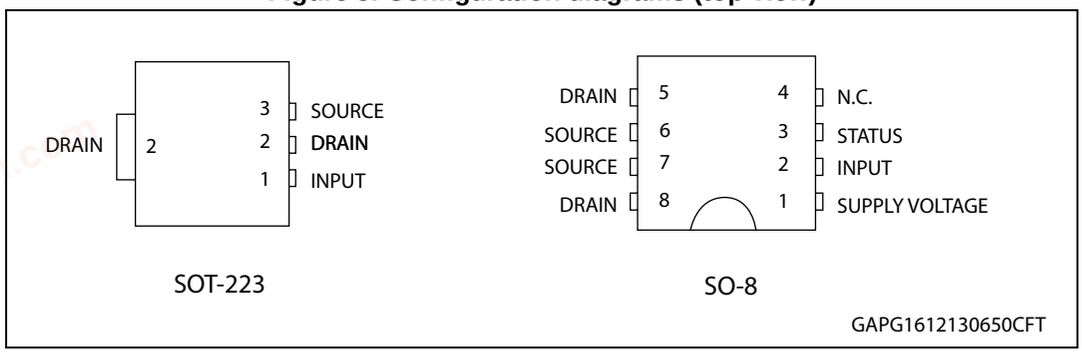

Table 3. Suggested connections for unused and n.c. pins

Connection / pin	STATUS	N.C.	INPUT
Floating	X	X	X
To ground	Not allowed	X	Through 10 kΩ resistor

chanhvinh.com

2 Absolute maximum rating

Stressing the device above the rating listed in the *Table 4* may cause permanent damage to the device. These are stress ratings only and operation of the device at these or any other conditions above those indicated in the operating sections of this specification is not implied. Exposure to absolute maximum rating conditions for extended periods may affect device reliability.

2.1 Absolute maximum ratings

Table 4. Absolute maximum ratings

Symbol	Parameter	Value		Unit
		SOT-223	SO-8	
V_{DS}	Drain-source voltage (V_{IN} = 0 V)	Internally clamped		V
I_D	DC drain current	Internally limited		A
$-I_D$	Reverse DC drain current	4		A
I_S	DC supply current	-	-1 to 10	mA
I_{IN}	DC input current	-1 to 10		mA
I_{STAT}	DC status current	-	-1 to 10	mA
V_{ESD1}	Electrostatic discharge (R = 1.5 kΩ; C = 100 pF) – DRAIN – SUPPLY, INPUT, STATUS	 5000 4000		V
V_{ESD2}	Electrostatic discharge on output pin only (R = 330 Ω, C = 150 pF)	2000		V
T_j	Junction operating temperature	-40 to 150		°C
T_{stg}	Storage temperature	-55 to 150		°C
E_{AS}	Single pulse avalanche energy (L = 1.1 mH, T_J = 150 °C, R_L = 0, I_{OUT} = I_{limL})	93		mJ

2.2 Thermal data

Table 5. Thermal data

Symbol	Parameter	Maximum value		Unit
		SOT-223	SO-8	
$R_{thj\text{-}amb}$	Thermal resistance junction-ambient	108.3(1)	87	°C/W

1. When mounted on a standard single-sided FR4 board with 0.5 cm^2 of Cu (at least 35 µm thick) connected to all DRAIN pins

chanhvinh.com

3 Electrical characteristics

Values specified in this section are for V_{supply} = V_{IN} = 4.5 V to 5.5 V, -40 °C < T_j < 150 °C, unless otherwise stated.

Table 6. Power MOS section

Symbol	Parameter	Test conditions	Min.	Typ.	Max.	Unit
V_{supply}	Operating supply voltage	-	3.5	5	5.5	V
R_{ON}	ON-state resistance	I_D = 2 A; T_j = 25 °C, V_{supply} = V_{IN} = 5 V			50	mΩ
		I_D = 2 A; T_j = 150 °C, V_{supply} = V_{IN} = 5 V			100	
V_{CLAMP}	Drain-source clamp voltage	V_{IN} = 0 V; I_D = 2 A	41	46	52	V
V_{CLTH}	Drain-source clamp threshold voltage	V_{IN} = 0 V; I_D = 2 mA	36			V
I_{DSS}	OFF-state output current	V_{IN} = 0 V; V_{DS} = 13 V; T_j = 25 °C	0		3	µA
		V_{IN} = 0 V; V_{DS} = 13 V; T_j = 125 °C	0		5	

Table 7. Source drain diode

Symbol	Parameter	Test conditions	Min.	Typ.	Max.	Unit
V_{SD}	Forward on voltage	I_D = 2 A; V_{IN} = 0 V	-	0.8	-	V

Table 8. Input section(1)

Symbol	Parameter	Test conditions	Min.	Typ.	Max.	Unit
I_{ISS}	Supply current from input pin	ON-state: V_{supply} = V_{IN} = 5 V; V_{DS} = 0 V		30	65	µA
V_{ICL}	Input clamp voltage	I_S = 1 mA	5.5		7	V
		I_S = -1 mA		-0.7		
V_{INTH}	Input threshold voltage	V_{DS} = V_{IN}; I_D = 1 mA	1		3.5	V

1. Valid for VNL5050N3-E option (input and supply pins connected together)

Table 9. Status pin(1)

Symbol	Parameter	Test conditions	Min.	Typ.	Max.	Unit
V_{STAT}	Status low output voltage	I_{STAT} = 1 mA			0.5	V
I_{LSTAT}	Status leakage current	Normal operation; V_{STAT} = 5 V			10	µA
C_{STAT}	Status pin input capacitance	Normal operation; V_{STAT} = 5 V			100	pF

chanhvinh.com

Table 9. Status pin(1) (continued)

Symbol	Parameter	Test conditions	Min.	Typ.	Max.	Unit
V_{STCL}	Status clamp voltage	I_{STAT} = 1 mA	5.5		7	V
		I_{STAT} = -1 mA		-0.7		

1. Valid for VNL5050S5-E option

Table 10. Logic input(1)

Symbol	Parameter	Test conditions	Min.	Typ.	Max.	Unit
V_{IL}	Low-level input voltage	—			0.9	V
I_{IL}	Low-level input current	V_{IN} = 0.9 V	1			µA
V_{IH}	High-level input voltage	—	2.1			V
I_{IH}	High-level input current	V_{IN} = 2.1 V			10	µA
$V_{I(hyst)}$	Input hysteresis voltage	—	0.13			V
V_{ICL}	Input clamp voltage	I_{IN} = 1 mA	5.5		7	V
		I_{IN} = -1 mA		-0.7		

1. Valid for VNL5050S5-E option

Table 11. Openload detection(1)

Symbol	Parameter	Test conditions	Min.	Typ.	Max.	Unit
V_{OL}	Openload OFF-state voltage detection threshold	V_{IN} = 0 V	0.6	1.2	1.7	V
$t_{d(oloff)}$	Delay between INPUT falling edge and STATUS falling edge in openload condition	I_{OUT} = 0 A	45	425	1100	µs

1. Valid for VNL5050S5-E option

Table 12. Supply section(1)

Symbol	Parameter	Test conditions	Min.	Typ.	Max.	Unit
I_S	Supply current	OFF-state: T_j = 25 °C; V_{IN} = V_{DRAIN} = 0 V;		10	25	µA
		ON-state: T_j = 25 °C; V_{IN} = 5 V; V_{DS} = 0 V		25	65	
V_{SCL}	Supply clamp voltage	I_{SCL} = 1 mA	5.5		7	V
		I_{SCL} = -1 mA		-0.7		

1. Valid for VNL5050S5-E option

chanhvinh.com

Table 13. Switching characteristics(1)

Symbol	Parameter	Test conditions	SOT-223(2)			SO-8			Unit
			Min.	Typ.	Max	Min.	Typ.	Max.	
$t_{d(ON)}$	Turn-on delay time	R_L = 6.5 Ω, V_{CC} = 13 V(3)	—	6	—	—	6	—	µs
$t_{d(OFF)}$	Turn-off delay time	R_L = 6.5 Ω, V_{CC} = 13 V	—	20	—	—	20	—	µs
t_r	Rise time	R_L = 6.5 Ω, V_{CC} = 13 V	—	10	—	—	10	—	µs
t_f	Fall time	R_L = 6.5 Ω, V_{CC} = 13 V	—	10	—	—	10	—	µs
W_{ON}	Switching energy losses at turn-on	R_L = 6.5 Ω, V_{CC} = 13 V	—	0.04	—	—	0.04	—	mJ
W_{OFF}	Switching energy losses at turn-off	R_L = 6.5 Ω, V_{CC} = 13 V	—	0.06	—	—	0.06	—	mJ

1. see *Figure 16: VNL5050N3-E application schematic* and *Figure 17: VNL5050S5-E application schematic*
2. 3.5 V ≤ V_{supply} = V_{IN} ≤ 5.5 V
3. See *Figure 15: Switching characteristics*

Table 14. Protection and diagnostics

Symbol	Parameter	Test conditions(1)	Min.	Typ.	Max.	Unit
I_{limH}	DC short-circuit current	V_{DS} = 13 V; V_{supply} = V_{IN} = 5 V	19	27	38	A
I_{limL}	Short-circuit current during thermal cycling	V_{DS} = 13 V; T_R < T_j < T_{TSD}; V_{supply} = V_{IN} = 5 V		11		A
t_{dlimL}	Step response current limit	V_{DS} = 13 V; V_{input} = 5 V		44		µs
T_{TSD}	Shutdown temperature	—	150	175	200	°C
T_R(2)	Reset temperature	—	T_{RS} + 1	T_{RS} + 5		°C
T_{RS} (3)	Thermal reset of STATUS	—	135			°C
T_{HYST}	Thermal hysteresis (T_{TSD} - T_R)	—		7		°C

1. V_{supply} = V_{input} in VNL5050N3-E version
2. Valid for VNL5050S5-E option

chanhvinh.com

3.1 Electrical characteristics curves

Figure 6. Source diode forward characteristics

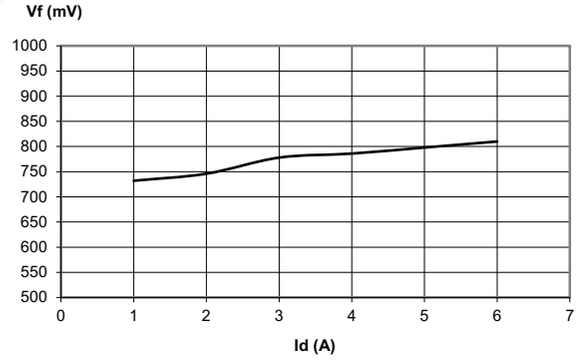

GAPG1612130659CFT

Figure 7. Static drain source on-resistance vs. drain current

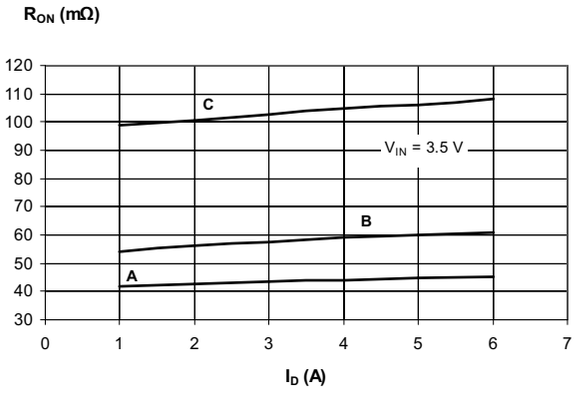

A: T_j = -40°C B: T_j = 250°C C: T_j = 150°C

Note: Input and supply pins connected together

GAPG1612130708CFT

Figure 8. Static drain source on-resistance vs. input voltage

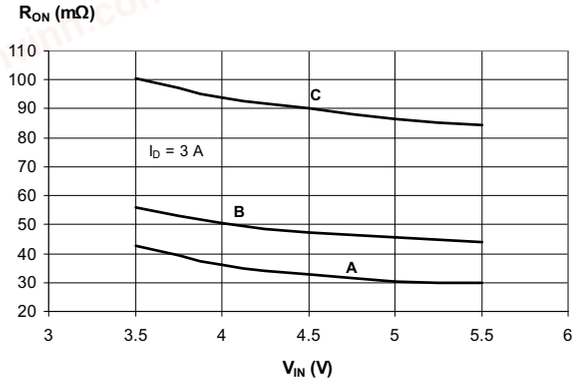

A: T_j = -40°C B: T_j = 250°C C: T_j = 150°C

Note: Input and supply pins connected together

GAPG1612130710CFT

Figure 9. Static drain source on-resistance vs. drain current

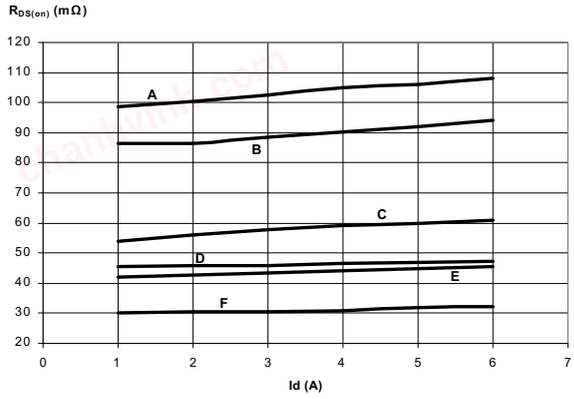

A: V_{IN} = 3.5 V; T_j = 150°C
B: V_{IN} = 5 V; T_j = 150°C
C: V_{IN} = 3.5 V; T_j = 25°C
D: V_{IN} = 5 V; T_j = 25°C
E: V_{IN} = 3.5 V; T_j = -40°C
F: V_{IN} = 5 V; T_j = -40°C

Note: Input and supply pins connected together

GAPG1612130716CFT

chanhvinh.com

Figure 10. Transfer characteristics

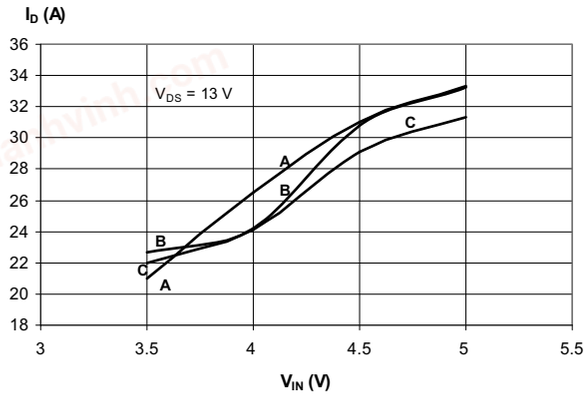

A: T_j = -40°C B: T_j = 250°C C: T_j = 150°C

Note: Input and supply pins connected together

GAPG1612130725CFT

Figure 11. Transfer characteristics (inside view for V_{IN} = 2 V to 3 V)

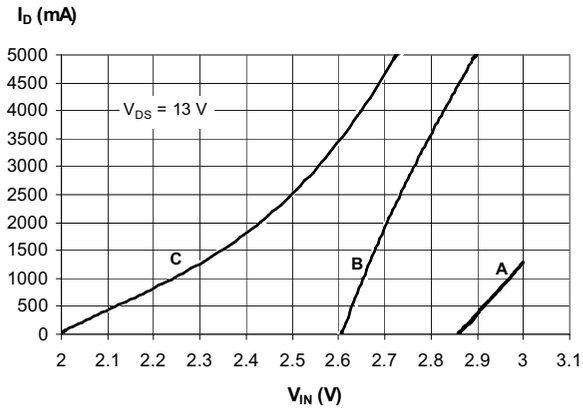

A: T_j = -40°C B: T_j = 250°C C: T_j = 150°C

Note: Input and supply pins connected together

GAPG1612130730CFT

Figure 12. Output characteristics

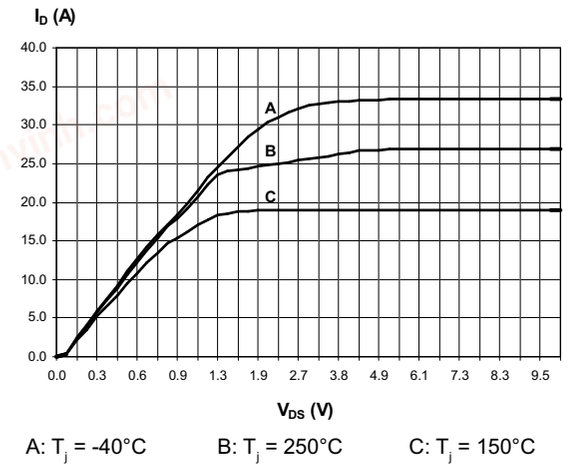

A: T_j = -40°C B: T_j = 250°C C: T_j = 150°C

Note: Input and supply pins connected together

GAPG1612130740CFT

Figure 13. Normalized on-resistance vs. temperature

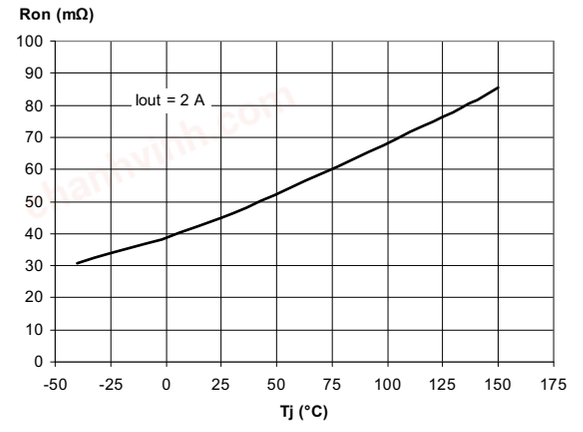

GAPG1612130745CFT

chanhvinh.com

Figure 14. Normalized input threshold vs. temperature

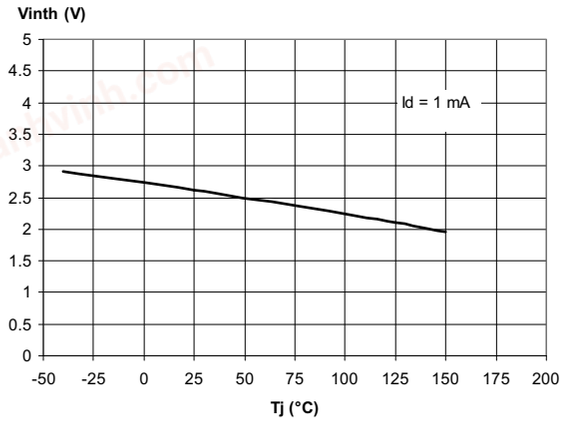

Note: Input and supply pins connected together

GAPG1612130752CFT

Table 15. Truth table(1)

Conditions	INPUT	DRAIN	STATUS
Normal operation	L H	H L	H H
Current limitation	L H	H X	H H
Overtemperature	L H	H H	H L
Undervoltage	L H	H H	X X
Output voltage < V_{OL}	L H	L L	L H

1. Valid for VNL5050S5-E option

chanhvinh.com

Figure 15. Switching characteristics

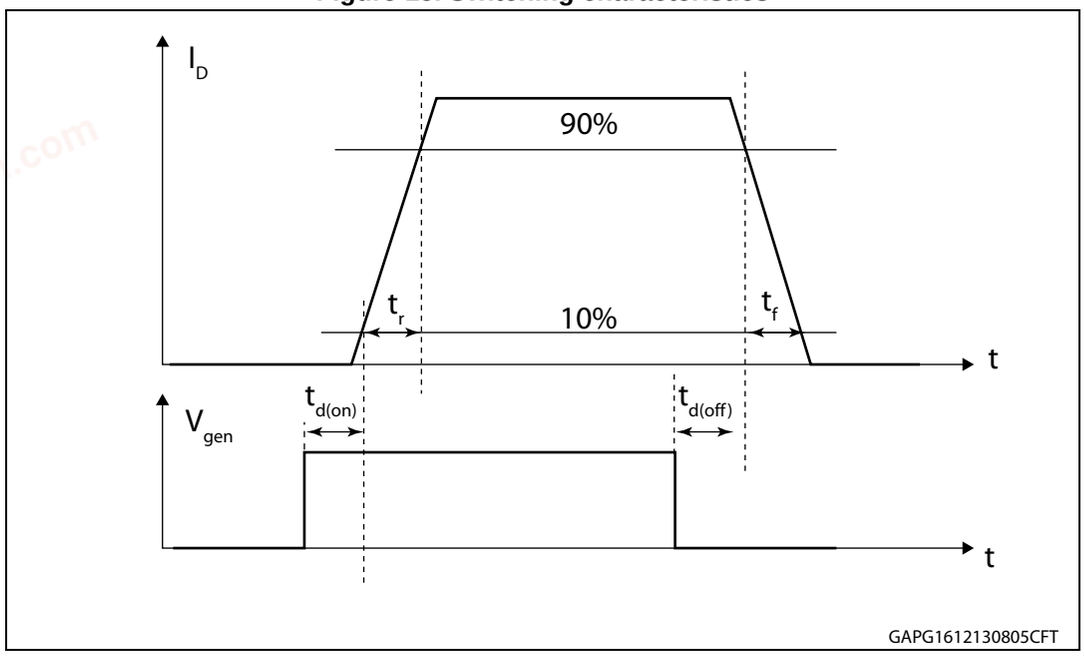

Figure 16. VNL5050N3-E application schematic

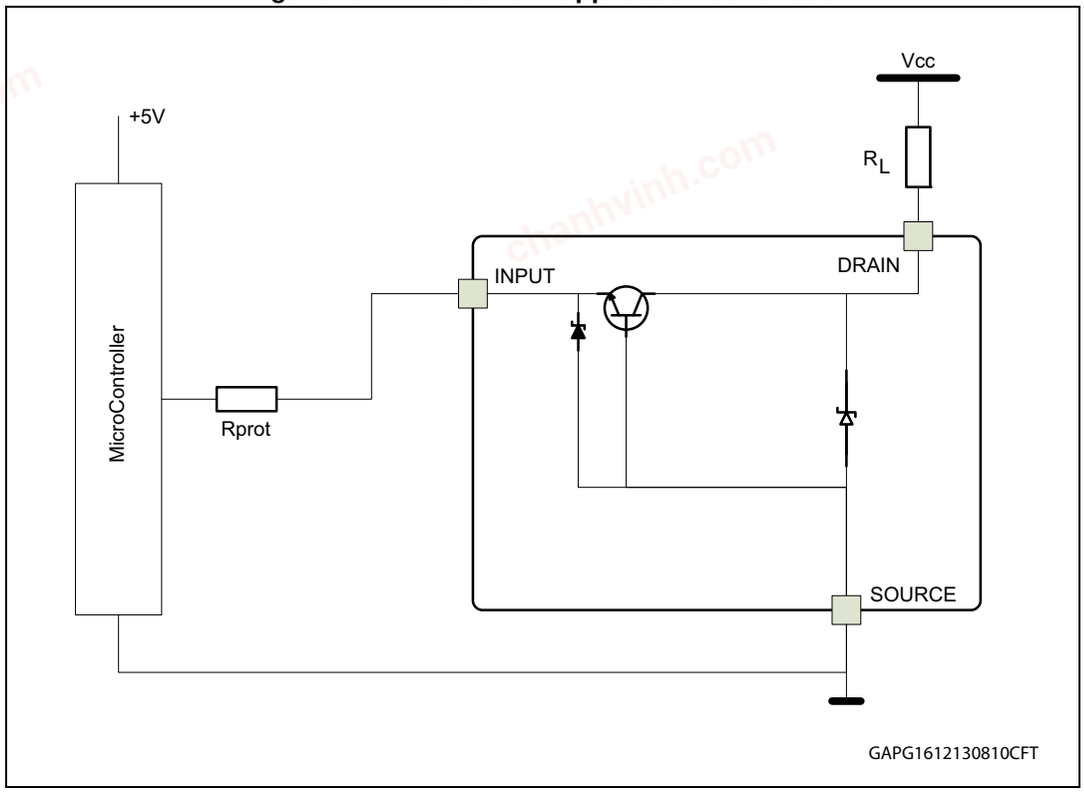

chanhvinh.com

Figure 17. VNL5050S5-E application schematic

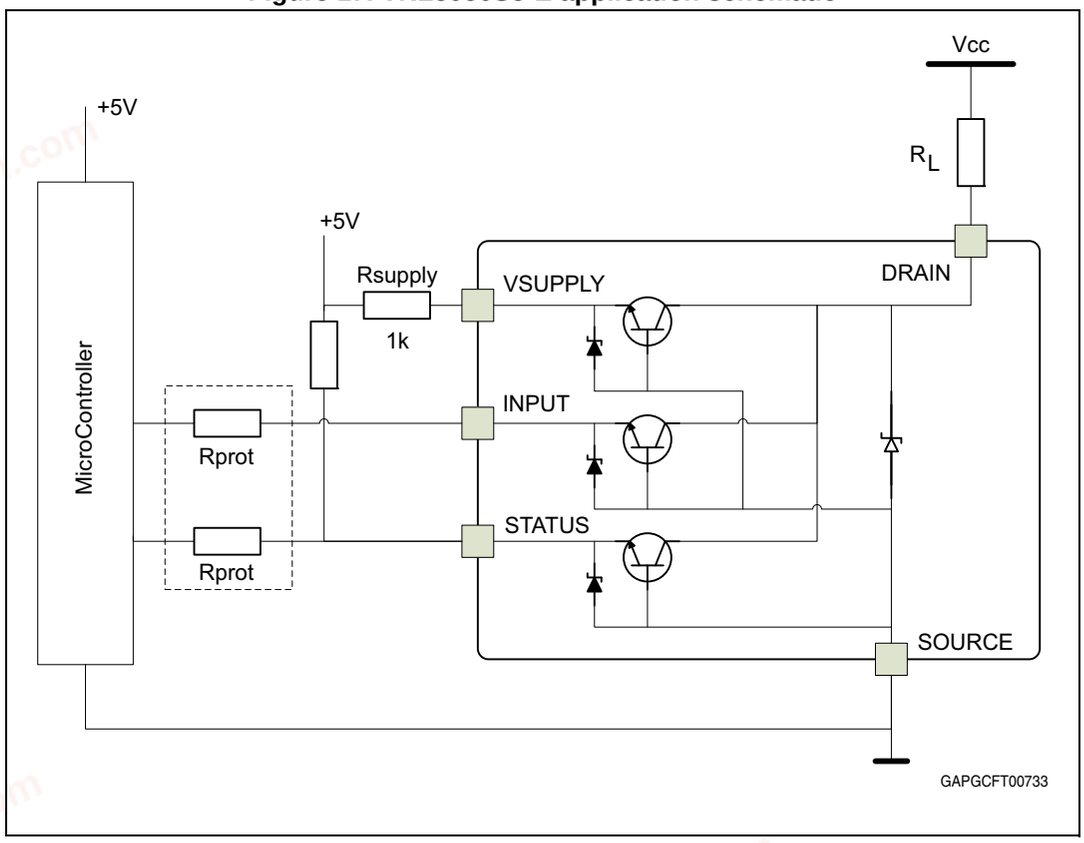

chanhvinh.com

3.2 MCU I/O protection

ST suggests to insert a resistor (R_{prot}) in line to prevent the microcontroller I/O pins from latching up[(a)]. The value of these resistors is a compromise between the leakage current of microcontroller and the current required by the LSD I/Os (input levels compatibility) with the latch-up limit of microcontroller I/Os:

Equation 1

$$\frac{0.7}{I_{latchup}} \leq R_{prot} \leq \frac{(V_{OH\,\mu C} - V_{IH})}{I_{IH\,max}}$$

Let:

- $I_{latchup} \geq 20$ mA
- $V_{OH\mu C} \geq 4.5$ V
- $35\ \Omega \leq R_{prot} \leq 100\ K\Omega$

Then, the recommended value is $R_{prot} = 1\ K\Omega$

Figure 18 shows the turn-off current drawn during the demagnetization.

a. In case of negative transient on the drain pin

chanhvinh.com

Figure 18. Maximum demagnetization energy

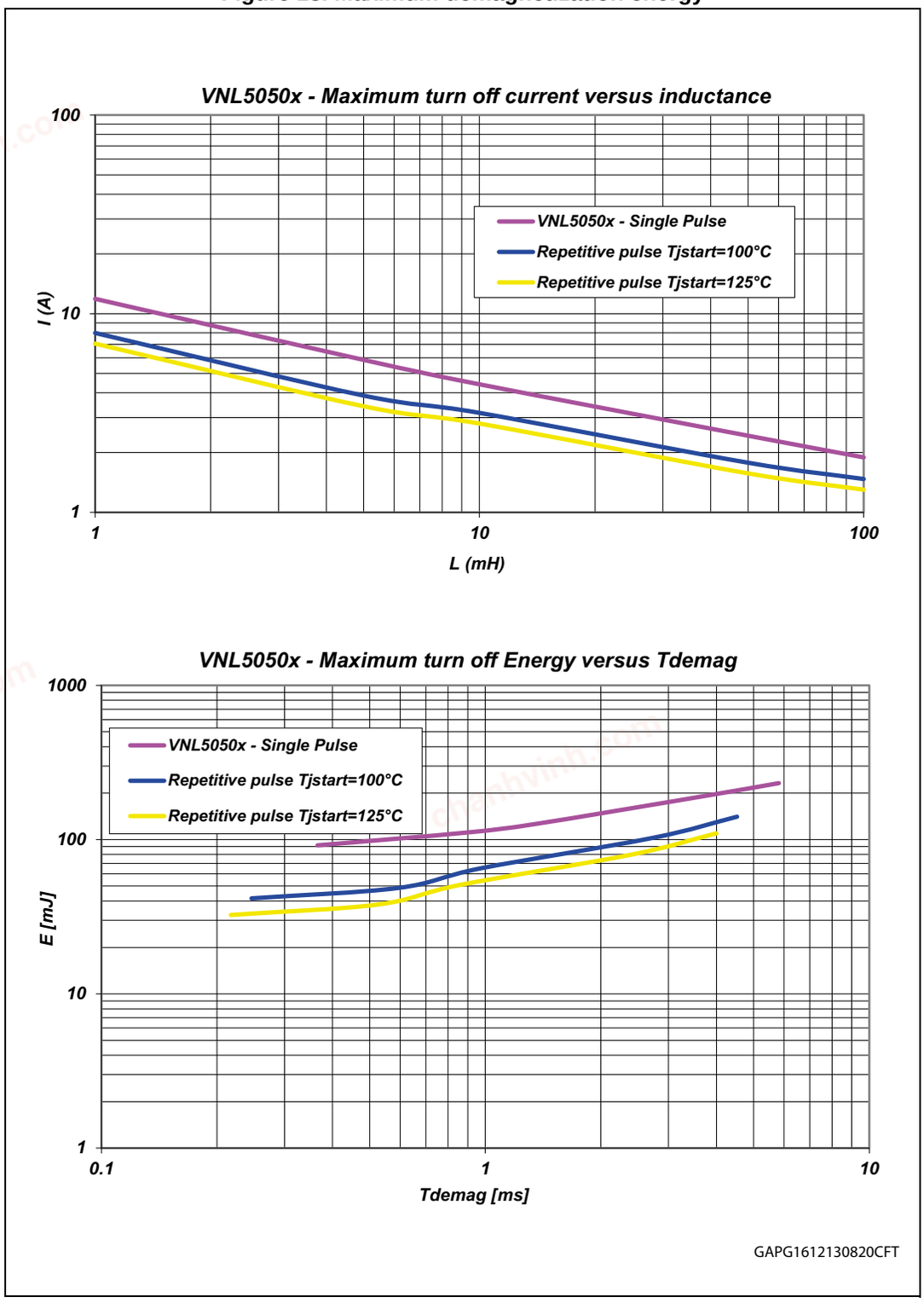

1. The voltage supply is V_{CC} = 13.5 V

chanhvinh.com

4 Package and PC board thermal data

4.1 SOT-223 thermal data

Figure 19. SOT-223 PC board

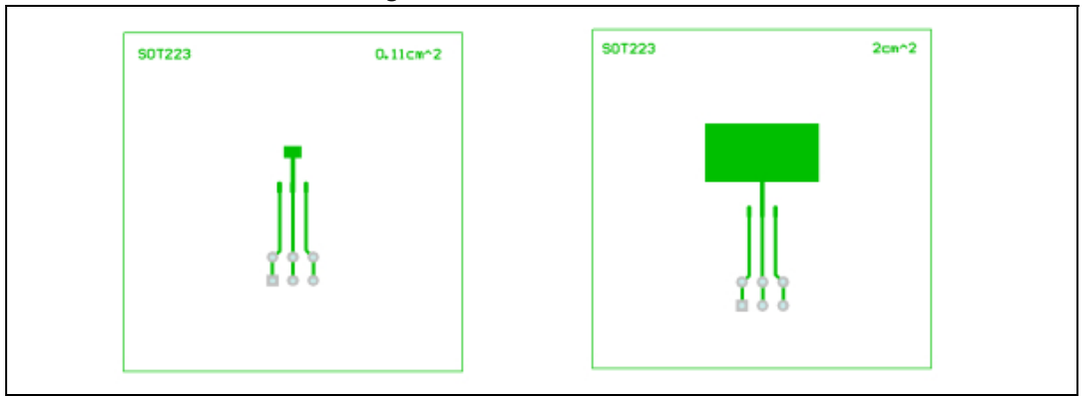

1. Layout condition of R_{th} and Z_{th} measurements (PCB FR4 area = 30 mm x 58 mm, PCB thickness = 2 mm, Cu thickness = 35 µm, copper areas: from minimum pad lay-out to 0.8 cm^2).

Figure 20. $R_{thj\text{-}amb}$ vs. PCB copper area in open box free air condition

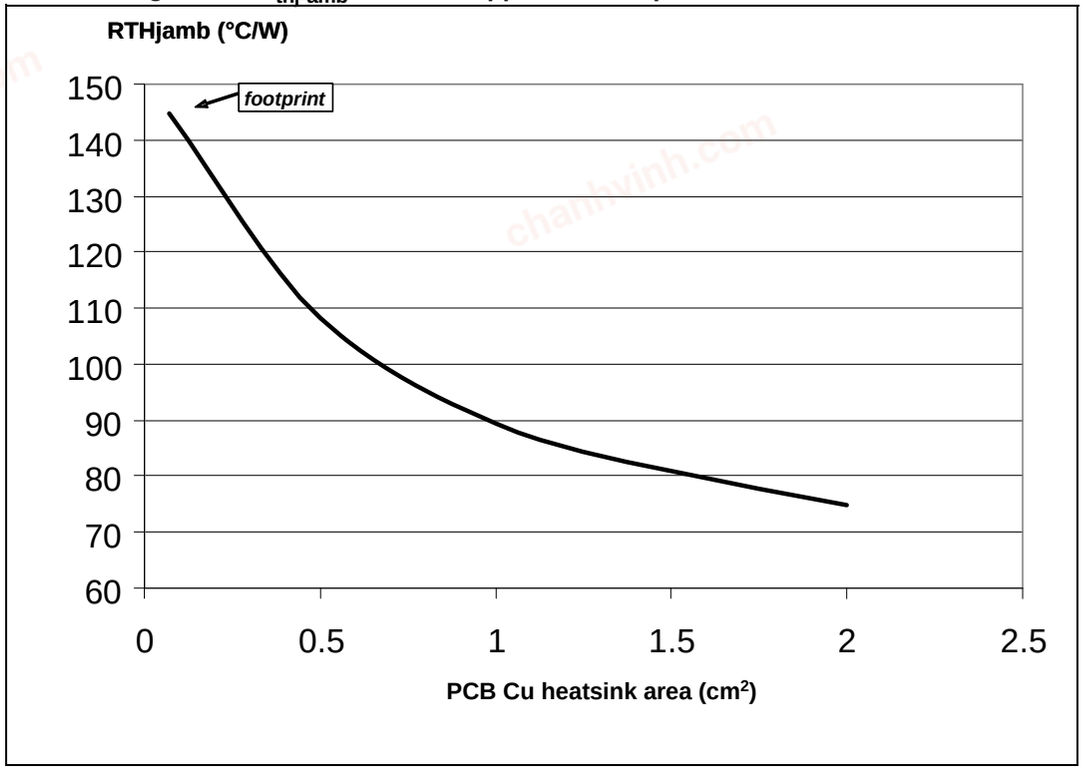

chanhvinh.com

Figure 21. SOT-223 thermal impedance junction ambient single pulse

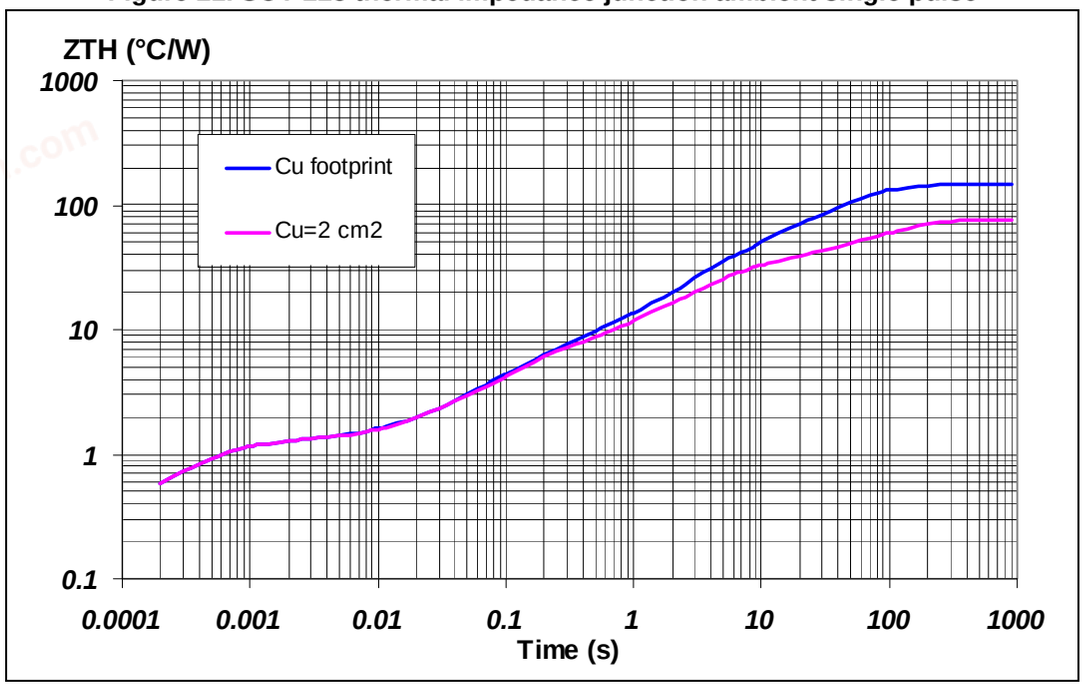

Equation 2: pulse calculation formula

$$Z_{TH\delta} = R_{TH} \times \delta + Z_{THtp}(1-\delta)$$

where $\delta = t_P/T$

Figure 22. Thermal fitting model of a LSD in SOT-223

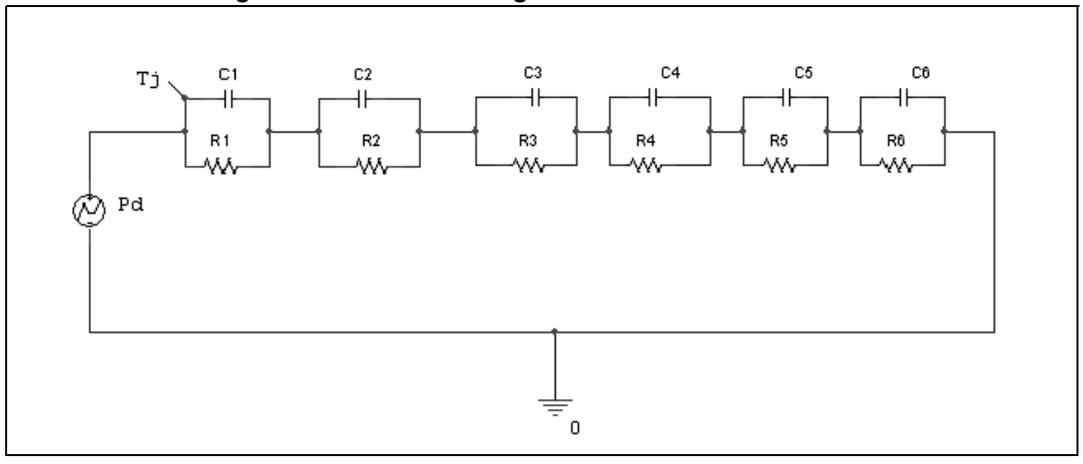

1. The fitting model is a semplified thermal tool and is valid for transient evolutions where the embedded protections (power limitation or thermal cycling during thermal shutdown) are not triggered.

chanhvinh.com

Table 16. Thermal parameters

Area/island (cm^2)	Footprint	2
R1 (°C/W)	0.4	
R2 (°C/W)	0.8	
R3 (°C/W)	4.5	
R4 (°C/W)	24	
R5 (°C/W)	0.1	
R6 (°C/W)	115	45
C1 (W.s/°C)	0.00006	
C2 (W.s/°C)	0.0005	
C3 (W.s/°C)	0.03	
C4 (W.s/°C)	0.16	
C5 (W.s/°C)	1000	
C6 (W.s/°C)	0.4	2

chanhvinh.com

4.2 SO-8 thermal data

Figure 23. SO-8 PC board

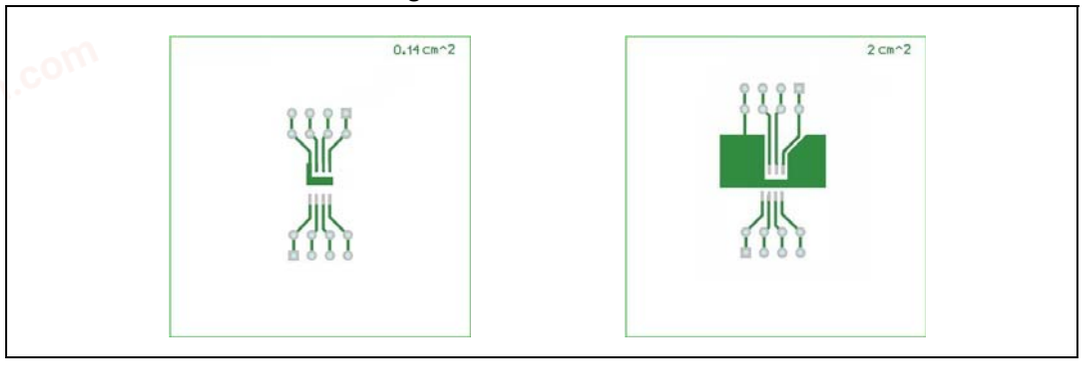

1. Layout condition of R_{th} and Z_{th} measurements (PCB FR4 area = 58 mm x 58 mm, PCB thickness = 2 mm, Cu thickness = 35 µm (front and back side), Copper areas: from minimum pad lay-out to 2 cm^2).

Figure 24. $R_{thj\text{-}amb}$ vs. PCB copper area in open box free air condition

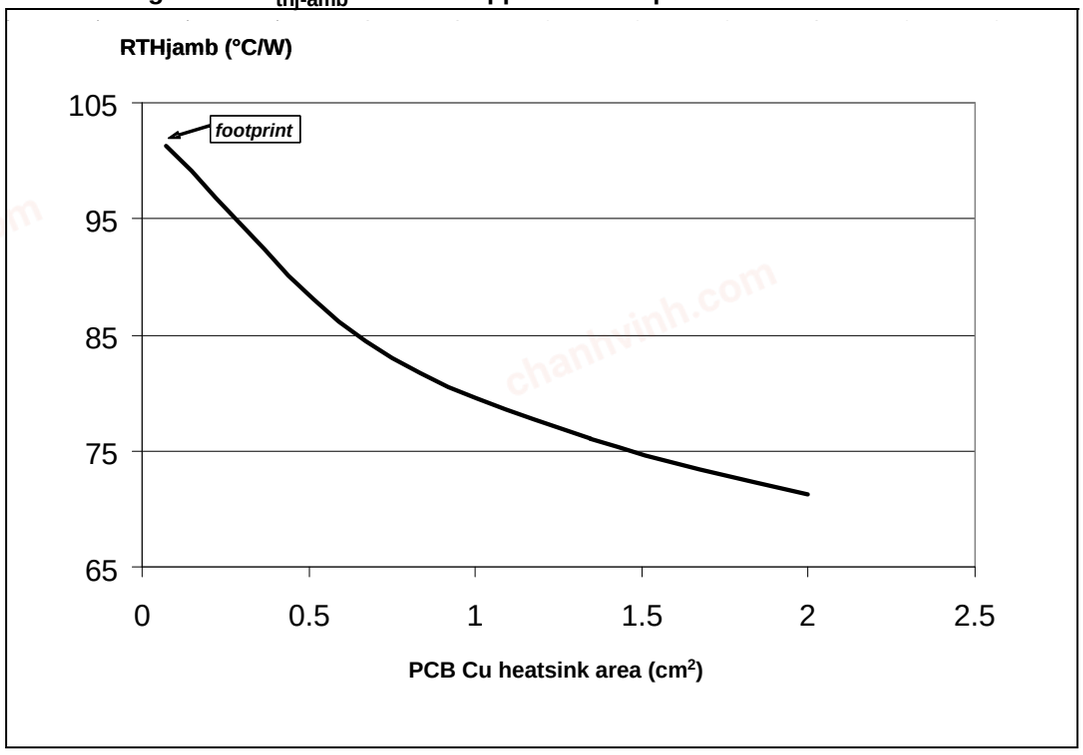

chanhvinh.com

Figure 25. SO-8 thermal impedance junction ambient single pulse

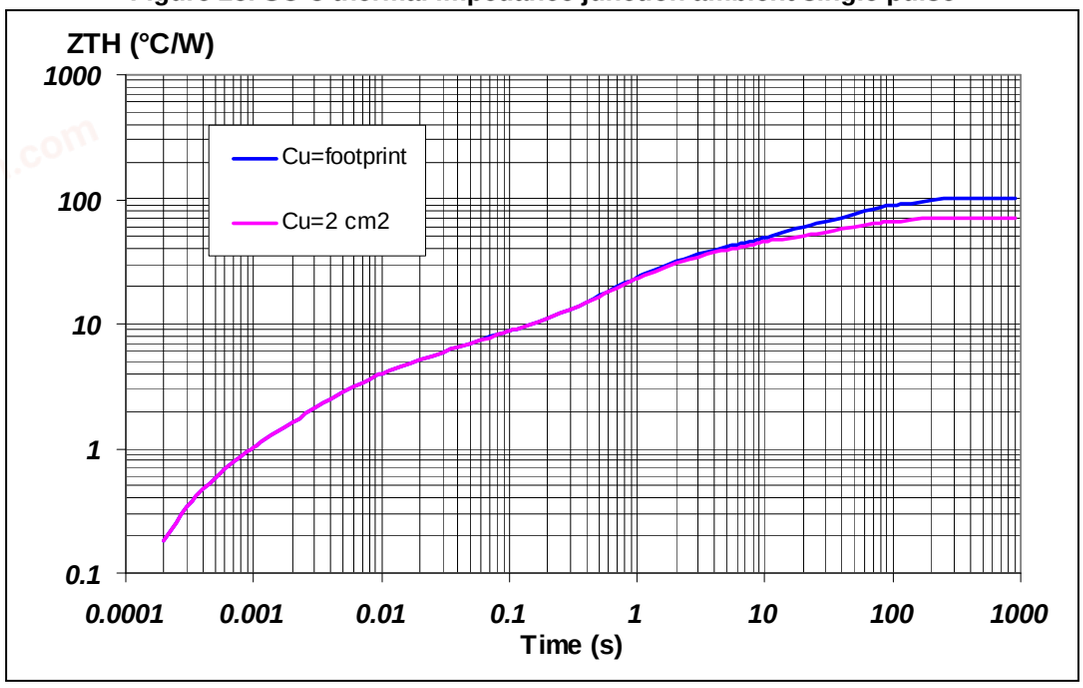

Equation 3: pulse calculation formula

$$Z_{TH\delta} = R_{TH} \times \delta + Z_{THtp}(1-\delta)$$

where $\delta = t_P/T$

Figure 26. Thermal fitting model of a LSD in SO-8

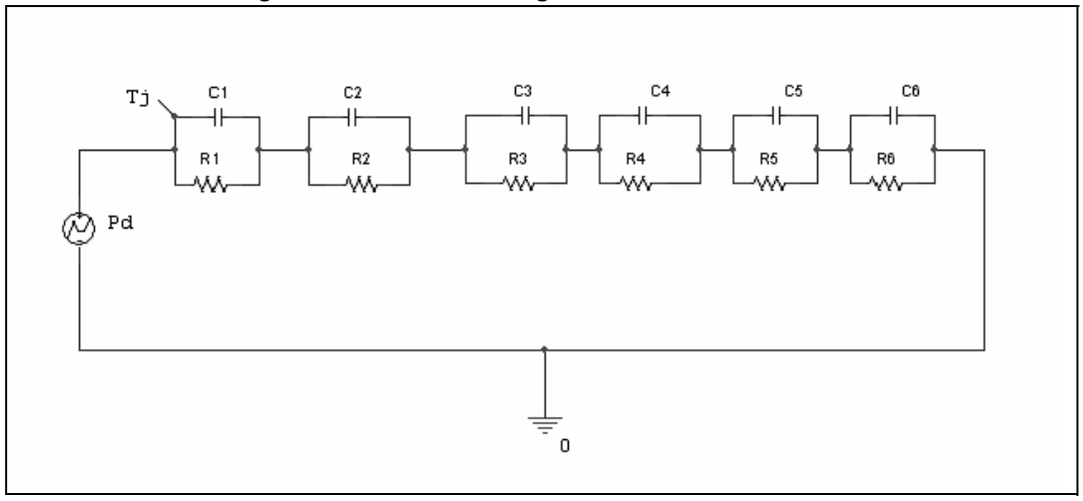

1. The fitting model is a semplified thermal tool and is valid for transient evolutions where the embedded protections (power limitation or thermal cycling during thermal shutdown) are not triggered.

chanhvinh.com

Table 17. Thermal parameters

Area/island (cm^2)	Footprint	2
R1 (°C/W)	0.4	
R2 (°C/W)	2.4	
R3 (°C/W)	3.5	
R4 (°C/W)	21	
R5 (°C/W)	16	
R6 (°C/W)	58	28
C1 (W.s/°C)	0.00008	
C2 (W.s/°C)	0.0016	
C3 (W.s/°C)	0.0075	
C4 (W.s/°C)	0.045	
C5 (W.s/°C)	0.35	
C6 (W.s/°C)	1.05	2

chanhvinh.com

5 Package and packing information

5.1 ECOPACK®

In order to meet environmental requirements, ST offers these devices in different grades of ECOPACK® packages, depending on their level of environmental compliance. ECOPACK® specifications, grade definitions and product status are available at: www.st.com. ECOPACK® is an ST trademark.

5.2 SOT-223 mechanical data

Figure 27. SOT-223 package dimensions

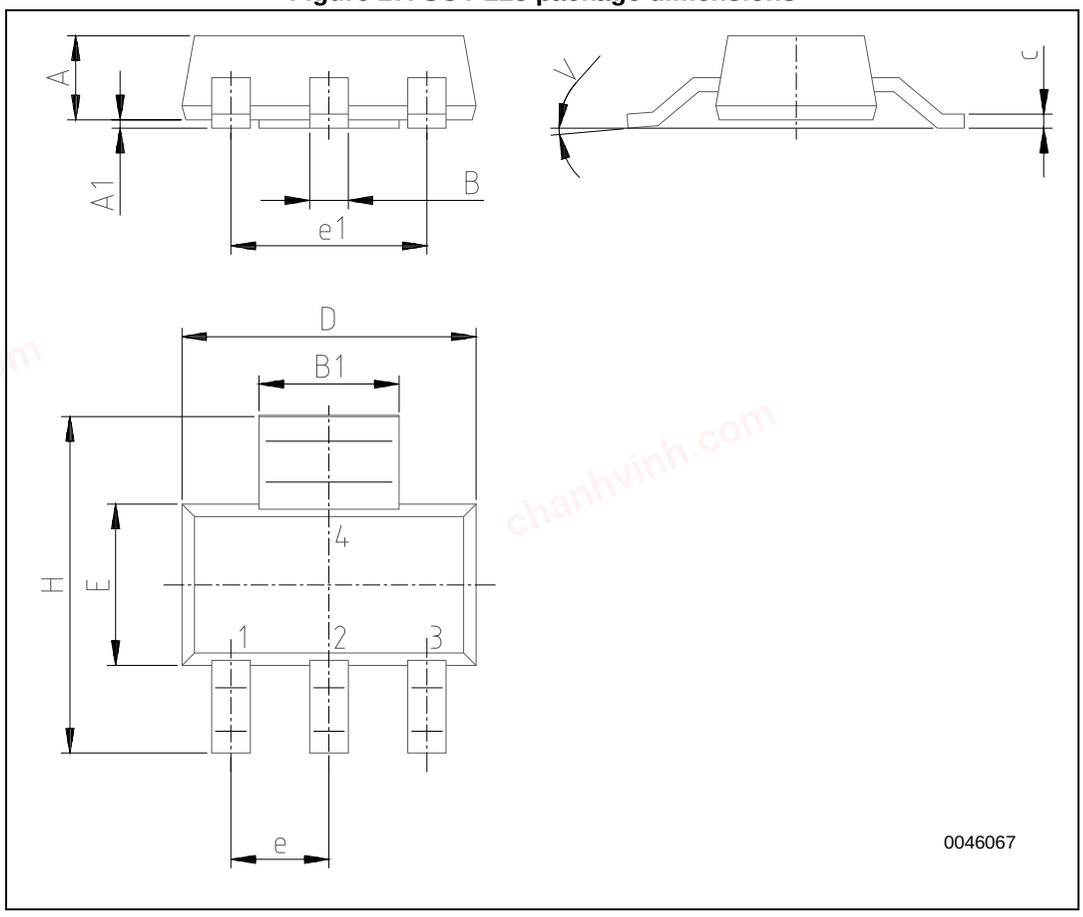

chanhvinh.com

Table 18. SOT-223 mechanical data

DIM.	mm.			inch		
	Min.	Typ.	Max.	Min.	Typ.	Max.
A			1.8			0.071
B	0.6	0.7	0.85	0.024	0.027	0.033
B1	2.9	3	3.15	0.114	0.118	0.124
c	0.24	0.26	0.35	0.009	0.01	0.014
D	6.3	6.5	6.7	0.248	0.256	0.264
e		2.3			0.09	
e1		4.6			0.181	
E	3.3	3.5	3.7	0.13	0.138	0.146
H	6.7	7	7.3	0.264	0.276	0.287
V	10 (max)					
A1	0.02		0.1	0.0008		0.004

chanhvinh.com

5.3 SO-8 mechanical data

Figure 28. SO-8 package dimensions

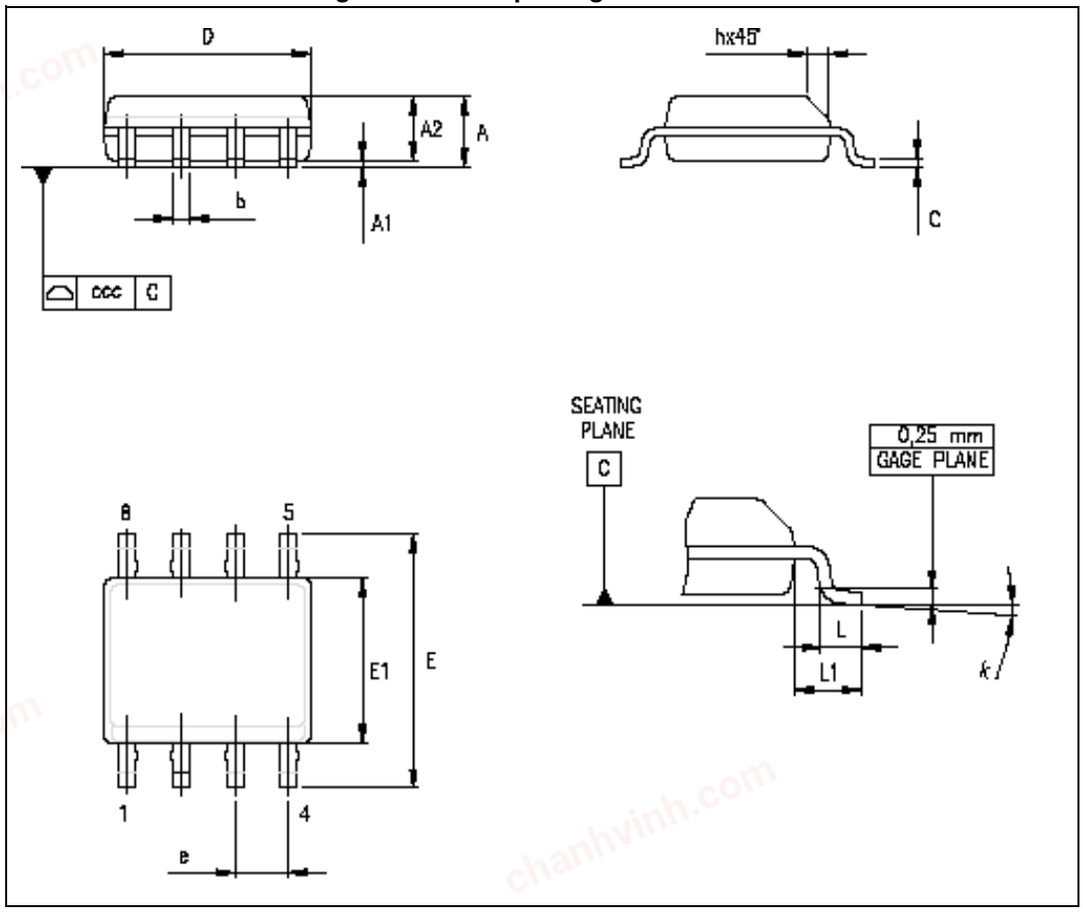

chanhvinh.com

Table 19. SO-8 mechanical data

Symbol	Millimeters		
	Min.	Typ.	Max.
A			1.75
A1	0.10		0.25
A2	1.25		
b	0.28		0.48
c	0.17		0.23
D(1)	4.80	4.90	5.00
E	5.80	6.00	6.20
E1(2)	3.80	3.90	4.00
e		1.27	
h	0.25		0.50
L	0.40		1.27
L1		1.04	
k	0°		8°
ccc			0.10

1. Dimension D does not include mold flash, protrusions or gate burrs. Mold flash, potrusions or gate burrs shall not exceed 0.15 mm in total (both side).
2. Dimension “E1” does not include interlead flash or protrusions. Interlead flash or protrusions shall not exceed 0.25 mm per side.

chanhvinh.com

5.4 SOT-223 packing information

The devices can be packed in tube or tape and reel shipments (see the *Table 1: Devices summary on page 1*).

Figure 29. SOT-223 tape and reel shipment (suffix “TR”)

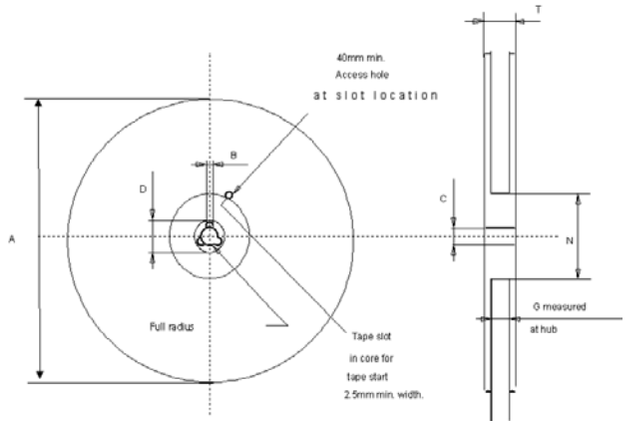

Reel dimensions

Base Q.ty	1000
Bulk Q.ty	1000
A (max)	330
B (min)	1.5
C (± 0.2)	13
F	20.2
G (+ 2 / -0)	12.4
N (min)	60
T (max)	18.4

Tape dimensions

According to Electronic Industries Association (EIA) Standard 481 rev. A, Feb. 1986

Tape width	**W**	12
Tape Hole Spacing	**P0 (± 0.1)**	4
Component Spacing	**P**	8
Hole Diameter	**D (+ 0.1/-0)**	1.5
Hole Diameter	**D1 (min)**	1.5
Hole Position	**F (± 0.05)**	5.5
Compartment Depth	**K (max)**	4.5
Hole Spacing	**P1 (± 0.1)**	2

All dimensions are in mm.

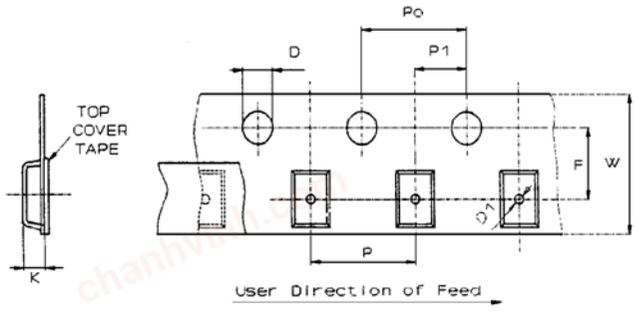

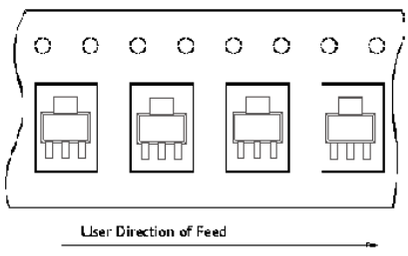

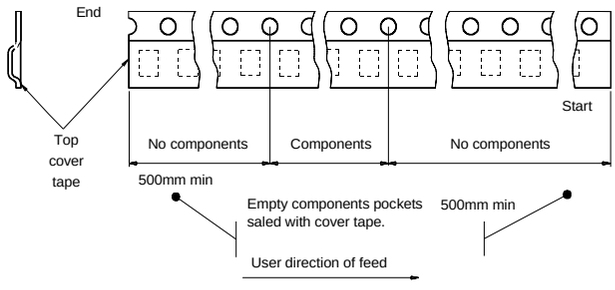

chanhvinh.com

5.5 SO-8 packing information

Figure 30. SO-8 tube shipment (no suffix)

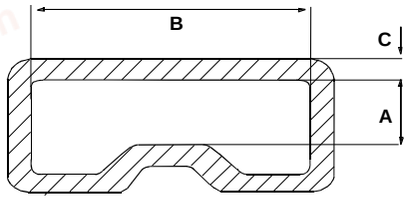

Base q.ty	100
Bulk q.ty	2000
Tube length (± 0.5)	532
A	3.2
B	6
C (± 0.1)	0.6

All dimensions are in mm.

Figure 31. SO-8 tape and reel shipment (suffix "TR")

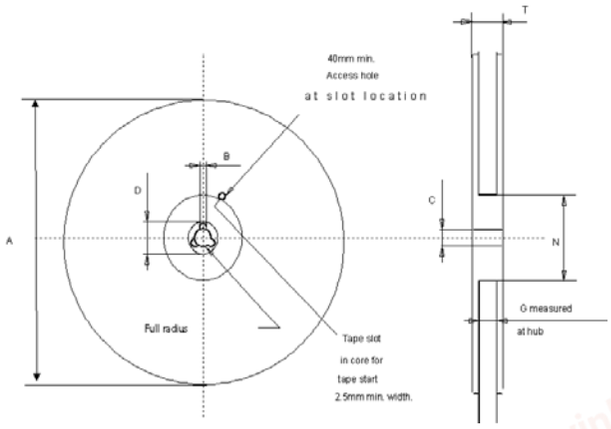

Reel dimensions

Base q.ty	2500
Bulk q.ty	2500
A (max)	330
B (min)	1.5
C (± 0.2)	13
F	20.2
G (+ 2 / -0)	12.4
N (min)	60
T (max)	18.4

All dimensions are in mm.

Tape dimensions

According to Electronic Industries Association (EIA) Standard 481 rev. A, Feb. 1986

Tape width	**W**	12
Tape hole spacing	**P0 (± 0.1)**	4
Component spacing	**P**	8
Hole diameter	**D (+ 0.1/-0)**	1.5
Hole diameter	**D1 (min)**	1.5
Hole position	**F (± 0.05)**	5.5
Compartment depth	**K (max)**	4.5
Hole spacing	**P1 (± 0.1)**	2

All dimensions are in mm.

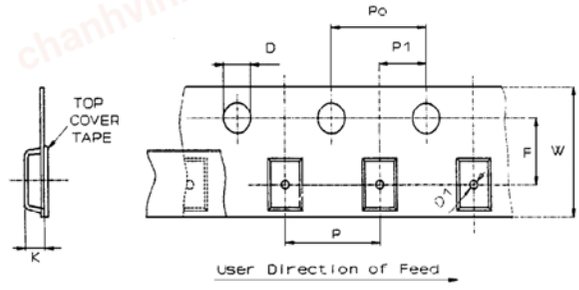

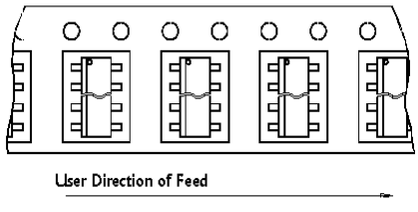

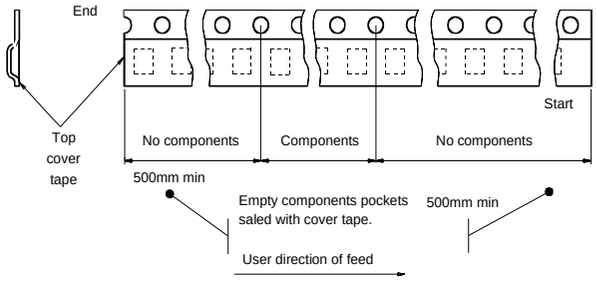

chanhvinh.com

6 Revision history

Table 20. Document revision history

Date	Revision	Changes
9-Jan-2008	1	Initial release.
25-Jun-2009	2	Updated corporate template from V2 to V3 *Table 3: Suggested connections for unused and n.c. pins* – V_{ESD1}: updated parameter and value – V_{ESD2}: changed value *Table 4: Absolute maximum ratings* – $R_{thj\text{-}case}$: deleted max value for SO-8 – $R_{thj\text{-}amb}$: added max value for both SOT-223 and SO-8 *Table 7: Source drain diode* – V_{SD}: added typ value *Table 8: Input section.* – V_{ICL}: added min/max value for I_S = 1 mA – $V_{INTH:}$ added min/max value *Table 9: Status pin* – V_{STCL}: added max value for I_{STAT} = 1 mA *Table 10: Logic input* – V_{ICL}: added max value for I_N = 1 mA *Table 12: Supply section* – I_S: changed unit of measurement for ON-state. – V_{VSL}: added max value for I_{STAT} = 1 mA *Table 13: Switching characteristics* – $t_{d(OFF)}$: changed typ value both for SOT-223 and SO-8 – W_{ON}: added typ value for SO-8 – W_{OFF}: added typ value for SO-8 – Added all typ column for SOT-223 *Table 14: Protection and diagnostics* – I_{limL}: changed typ value – t_{dlimL}: changed typ value – Deleted row T_R valid for VNL5050N3-E option Added *Figure 6: Source diode forward characteristics* Added *Figure 7: Static drain source on-resistance vs. drain current* Added *Figure 8: Static drain source on-resistance vs. input voltage* Added *Figure 9: Static drain source on-resistance vs. drain current* Added *Figure 10: Transfer characteristics* Added *Figure 11: Transfer characteristics (inside view for V_{IN} = 2 V to 3 V)* Added *Figure 12: Output characteristics* Added *Figure 13: Normalized on-resistance vs. temperature* Added *Chapter 4: Package and PC board thermal data*

chanhvinh.com

Table 20. Document revision history (continued)

Date	Revision	Changes
25-Jun-2009	2 (continued)	Deleted table 25: SOT-223 mechanical data & package outline Added *Figure 27: SOT-223 package dimensions* Added *Table 18: SOT-223 mechanical data* Deleted table 26: SO-8 mechanical data & package outline Added *Figure 28: SO-8 package dimensions* Added *Table 19: SO-8 mechanical data*
19-Aug-2009	3	Updated corporate template from V3 to V3-1 Deleted row for $R_{thj\text{-}case}$ in *Table 5: Thermal data*
20-Nov-2009	4	Changed the document title Took the first line off the bullet list for *Features* on cover page *Table 4: Absolute maximum ratings* – E_{AS}: added new row *Table 6: Power MOS section* – V_{supply}: added new row – R_{ON}: updated test conditions *Table 8: Input section.* – I_{SS}: updated test conditions – Updated the table footnote *Table 13: Switching characteristics* – Moved footnote 2 and changed its text – W_{ON}: changed typ value – W_{OFF}: changed typ value *Table 14: Protection and diagnostics* – I_{limH}: updated test conditions – I_{limL}: updated test conditions – t_{dlimL}: changed typ value Updated *Figure 7: Static drain source on-resistance vs. drain current* Updated *Figure 8: Static drain source on-resistance vs. input voltage* Updated *Figure 9: Static drain source on-resistance vs. drain current* Updated *Figure 10: Transfer characteristics* Added *Figure 11: Transfer characteristics (inside view for V_{IN} = 2 V to 3 V)* Updated *Figure 14: Normalized input threshold vs. temperature* Added *Section 3.2: MCU I/O protection*
19-Sep-2013	5	Updated Disclaimer.
17-Dec-2013	6	*Table 4: Absolute maximum ratings*: – $-I_D$: updated value *Table 8: Input section.*: – I_{ISS}: updated value *Table 12: Supply section*: – I_S: updated value Updated *Figure 16: VNL5050N3-E application schematic* and *Figure 17: VNL5050S5-E application schematic* Updated *Section 3.2: MCU I/O protection*

chanhvinh.com

Please Read Carefully:

Information in this document is provided solely in connection with ST products. STMicroelectronics NV and its subsidiaries (“ST”) reserve the right to make changes, corrections, modifications or improvements, to this document, and the products and services described herein at any time, without notice.

All ST products are sold pursuant to ST’s terms and conditions of sale.

Purchasers are solely responsible for the choice, selection and use of the ST products and services described herein, and ST assumes no liability whatsoever relating to the choice, selection or use of the ST products and services described herein.

No license, express or implied, by estoppel or otherwise, to any intellectual property rights is granted under this document. If any part of this document refers to any third party products or services it shall not be deemed a license grant by ST for the use of such third party products or services, or any intellectual property contained therein or considered as a warranty covering the use in any manner whatsoever of such third party products or services or any intellectual property contained therein.

UNLESS OTHERWISE SET FORTH IN ST’S TERMS AND CONDITIONS OF SALE ST DISCLAIMS ANY EXPRESS OR IMPLIED WARRANTY WITH RESPECT TO THE USE AND/OR SALE OF ST PRODUCTS INCLUDING WITHOUT LIMITATION IMPLIED WARRANTIES OF MERCHANTABILITY, FITNESS FOR A PARTICULAR PURPOSE (AND THEIR EQUIVALENTS UNDER THE LAWS OF ANY JURISDICTION), OR INFRINGEMENT OF ANY PATENT, COPYRIGHT OR OTHER INTELLECTUAL PROPERTY RIGHT.

ST PRODUCTS ARE NOT DESIGNED OR AUTHORIZED FOR USE IN: (A) SAFETY CRITICAL APPLICATIONS SUCH AS LIFE SUPPORTING, ACTIVE IMPLANTED DEVICES OR SYSTEMS WITH PRODUCT FUNCTIONAL SAFETY REQUIREMENTS; (B) AERONAUTIC APPLICATIONS; (C) AUTOMOTIVE APPLICATIONS OR ENVIRONMENTS, AND/OR (D) AEROSPACE APPLICATIONS OR ENVIRONMENTS. WHERE ST PRODUCTS ARE NOT DESIGNED FOR SUCH USE, THE PURCHASER SHALL USE PRODUCTS AT PURCHASER’S SOLE RISK, EVEN IF ST HAS BEEN INFORMED IN WRITING OF SUCH USAGE, UNLESS A PRODUCT IS EXPRESSLY DESIGNATED BY ST AS BEING INTENDED FOR “AUTOMOTIVE, AUTOMOTIVE SAFETY OR MEDICAL” INDUSTRY DOMAINS ACCORDING TO ST PRODUCT DESIGN SPECIFICATIONS. PRODUCTS FORMALLY ESCC, QML OR JAN QUALIFIED ARE DEEMED SUITABLE FOR USE IN AEROSPACE BY THE CORRESPONDING GOVERNMENTAL AGENCY.

Resale of ST products with provisions different from the statements and/or technical features set forth in this document shall immediately void any warranty granted by ST for the ST product or service described herein and shall not create or extend in any manner whatsoever, any liability of ST.

ST and the ST logo are trademarks or registered trademarks of ST in various countries.
Information in this document supersedes and replaces all information previously supplied.
The ST logo is a registered trademark of STMicroelectronics. All other names are the property of their respective owners.

© 2013 STMicroelectronics - All rights reserved

STMicroelectronics group of companies

Australia - Belgium - Brazil - Canada - China - Czech Republic - Finland - France - Germany - Hong Kong - India - Israel - Italy - Japan - Malaysia - Malta - Morocco - Philippines - Singapore - Spain - Sweden - Switzerland - United Kingdom - United States of America

www.st.com