chanhvinh.com

TL431

Programmable voltage reference

Features

- Adjustable output voltage: 2.5 to 36 V
- Sink current capability: 1 to 100 mA
- Typical output impedance: 0.22 Ω
- 1% and 2% voltage precision
- Automotive temperature range -40°C to +125°C

Applications

- Power supply
- Industrial
- Automotive



Z
TO-92
(Plastic package)



D
SO-8
(Batwing plastic micropackage)

Description

The TL431 is a programmable shunt voltage reference with guaranteed temperature stability over the entire operating temperature range.

The device's temperature range is extended for the automotive version from -40° C up to +125° C.

The output voltage can be set to any value between 2.5 and 36 V with two external resistors.

The TL431 operates with a wide current range from 1 to 100 mA with a typical dynamic impedance of 0.22 Ω.

chanhvinh.com

1 Schematic diagrams

Figure 1. TO-92 pin connections (top view)

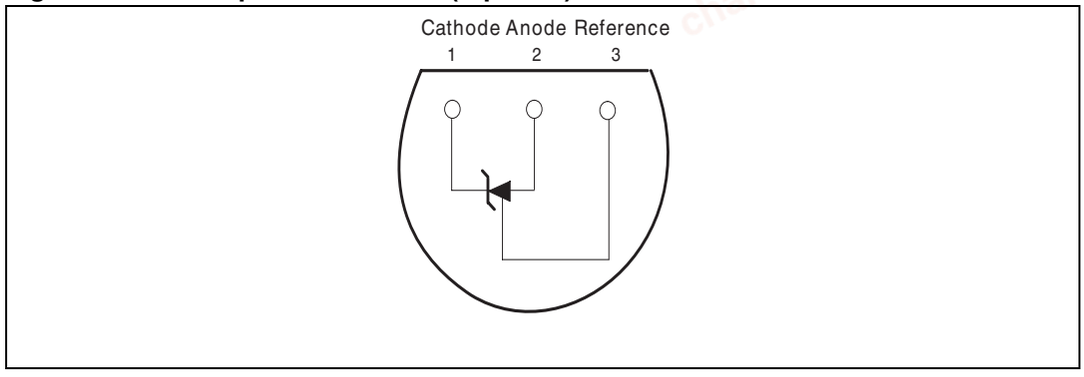

Figure 2. SO-8 batwing pin connections (top view)

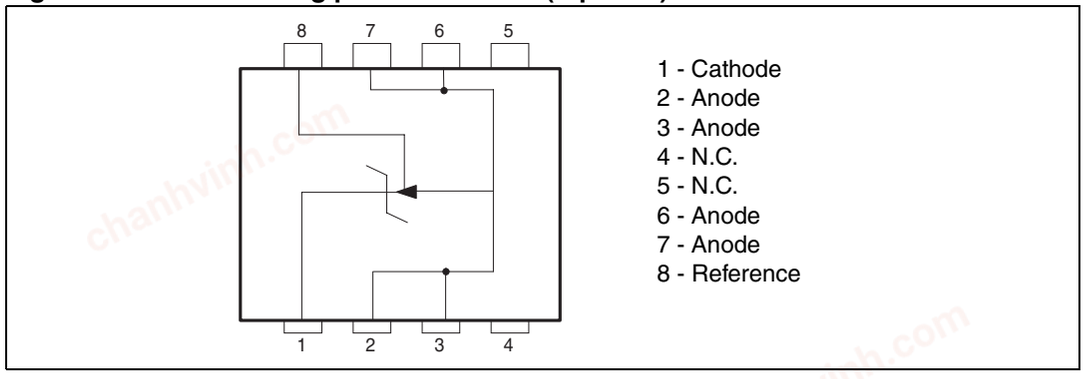

Figure 3. TL431 block diagram

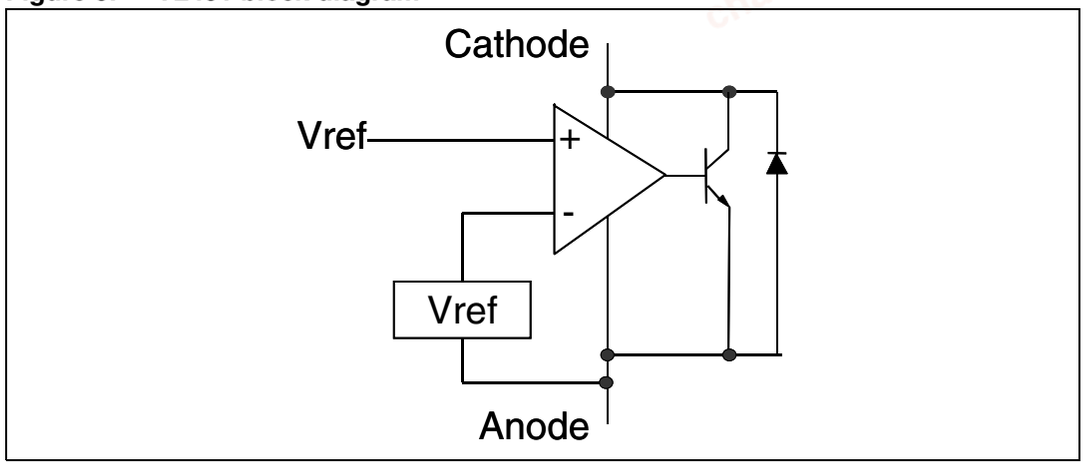

chanhvinh.com

2 Absolute maximum ratings and operating conditions

Table 1. Absolute maximum ratings

Symbol	Parameter	Value	Unit
V_{KA}	Cathode to anode voltage	37	V
I_k	Continuous cathode current range	-100 to +150	mA
I_{ref}	Reference input current range	-0.05 to +10	mA
R_{thja}	Thermal resistance junction to ambient(1) TO-92 SO-8 batwing	 200 85	°C/W
R_{thjc}	Thermal resistance junction to case (1) SO-8 batwing	30	°C/W
T_{stg}	Storage temperature range	-65 to +150	°C
ESD	TL431IY TL431AIY: HBM: human body model (2) TL431: HBM: human body model MM: machine model (3) CDM: charged device model (4)	3000 2000 200 1500	V

1. Short-circuits can cause excessive heating. These values are typical.
2. Human body model: a 100 pF capacitor is charged to the specified voltage, then discharged through a 1.5 kΩ resistor between two pins of the device. This is done for all couples of connected pin combinations while the other pins are floating.
3. Machine model: a 200 pF capacitor is charged to the specified voltage, then discharged directly between two pins of the device with no external series resistor (internal resistor < 5 Ω). This is done for all couples of connected pin combinations while the other pins are floating.
4. Charged device model: all pins and the package are charged together to the specified voltage and then discharged directly to the ground through only one pin. This is done for all pins.

Table 2. Operating conditions

Symbol	Parameter	Value	Unit
V_{KA}	Cathode to anode voltage	V_{ref} to 36	V
I_k	Cathode current	1 to 100	mA
T_{oper}	Operating free-air temperature range TL431C/AC TL431I/AI TL431IY/AIY	 0 to +70 -40 to +105 -40 to +125	°C

chanhvinh.com

3 Electrical characteristics

Table 3. TL431C: 0° C to 70° C (T_{amb} = 25° C unless otherwise specified)

Symbol	Parameter	TL431C			TL431AC			Unit
		Min.	Typ.	Max.	Min.	Typ.	Max.	
V_{ref}	Reference input voltage $V_{KA} = V_{ref}$, I_k = 10 mA, T_{amb} = 25° C $T_{min} \le T_{amb} \le T_{max}$	2.44 2.423	2.495	2.55 2.567	2.47 2.453	2.495	2.52 2.537	V
ΔV_{ref}	Reference input voltage deviation over temperature range (1) $V_{KA} = V_{ref}$, I_k = 10 mA, $T_{min} \le T_{amb} \le T_{max}$		3	17		3	15	mV
$\frac{\Delta Vref}{\Delta Vka}$	Ratio of change in reference input voltage to change in cathode to anode voltage I_k = 10 mA - ΔV_{KA} = 10 V to V_{ref} ΔV_{KA} = 36 V to 10 V	-2.7 -2	-1.4 -1		-2.7 -2	-1.4 -1		mV/V
I_{ref}	Reference input current I_k = 10 mA, R1 = 10 kΩ, R2 = ∞ T_{amb} = 25° C $T_{min} \le T_{amb} \le T_{max}$		1.8	4 5.2		1.8	4 5.2	µA
ΔI_{ref}	Reference input current deviation over temperature range I_k = 10 mA, R1 = 10 kΩ, R2 =∞ $T_{min} \le T_{amb} \le T_{max}$		0.4	1.2		0.4	1.2	µA
I_{min}	Minimum cathode current for regulation $V_{KA} = V_{ref}$		0.5	1		0.5	0.6	mA
I_{off}	Off-state cathode current		2.6	1000		2.6	1000	nA
$\lvert ZKA \rvert$	Dynamic impedance (2) $V_{KA} = V_{ref}$, ΔI_k = 1 to 100 mA, f ≤ 1 kHZ		0.22	0.5		0.22	0.5	Ω

1. See definition of *Section 3.1: Reference input voltage deviation over temperature range*.
2. The dynamic impedance is defined as $\lvert ZKA \rvert = \frac{\Delta V_{KA}}{\Delta I_k}$

chanhvinh.com

Table 4. TL431I: -40° C to 105° C, T_{amb} = 25°C (unless otherwise specified)

Symbol	Parameter	TL431I			TL431AI			Unit
		Min.	Typ.	Max.	Min.	Typ.	Max.	
V_{ref}	Reference input voltage $V_{KA} = V_{ref}$, I_k = 10 mA, T_{amb} = 25° C $T_{min} \le T_{amb} \le T_{max}$	2.44 2.41	2.495	2.55 2.58	2.47 2.44	2.495	2.52 2.55	V
ΔV_{ref}	Reference input voltage deviation over temperature range (1) $V_{KA} = V_{ref}$, I_k =10 mA, $T_{min} \le T_{amb} \le T_{max}$		7	30		7	30	mV
$\frac{\Delta Vref}{\Delta Vka}$	Ratio of change in reference input voltage to change in cathode to anode voltage I_k = 10 mA, ΔV_{KA} = 10 V to V_{ref} ΔV_{KA} = 36 V to 10 V	-2.7 -2	-1.4 -1		-2.7 -2	-1.4 -1		mV/V
I_{ref}	Reference input current I_k = 10 mA, R1 = 10 kΩ, R2 = ∞ T_{amb} = 25° C $T_{min} \le T_{amb} \le T_{max}$		1.8	4 6.5		1.8	4 6.5	µA
ΔI_{ref}	Reference input current deviation over temperature range I_k = 10 mA, R1 = 10 kΩ, R2 = ∞ $T_{min} \le T_{amb} \le T_{max}$		0.8	2.5		0.8	1.2	µA
I_{min}	Minimum cathode current for regulation $V_{KA} = V_{ref}$		0.5	1		0.5	0.7	mA
I_{off}	Off-state cathode current		2.6	1000		2.6	1000	nA
$\lvert ZKA \rvert$	Dynamic impedance (2) $V_{KA} = V_{ref}$, ΔI_k = 1 to 100 mA, f ≤ 1 kHZ		0.22	0.5		0.22	0.5	Ω

1. See definition of *Section 3.1: Reference input voltage deviation over temperature range* below.
2. The dynamic impedance is defined as $\lvert ZKA \rvert = \frac{\Delta V_{KA}}{\Delta I_k}$

chanhvinh.com

Table 5. TL431IY: -40° C to 125° C, T_{amb} = 25°C (unless otherwise specified)

Symbol	Parameter	TL431IY			TL431AIY			Unit
		Min.	Typ.	Max.	Min.	Typ.	Max.	
V_{ref}	Reference input voltage $V_{KA} = V_{ref}$, I_k = 10 mA $T_{min} \le T_{amb} \le T_{max}$	2.44 2.41	2.495	2.55 2.58	2.47 2.44	2.495	2.52 2.55	V
ΔV_{ref}	Reference input voltage deviation over temperature range (1) $V_{KA} = V_{ref}$, I_k = 10 mA, $T_{min} \le T_{amb} \le T_{max}$		7	30		7	30	mV
$\frac{\Delta Vref}{\Delta Vka}$	Ratio of change in reference input voltage to change in cathode to anode voltage I_k = 10 mA, ΔV_{KA} = 10 V to V_{ref} I_k = 10 mA, ΔV_{KA} = 36 V to 10 V	-2.7 -2	-1.4 -1		-2.7 -2	-1.4 -1		mV/V
I_{ref}	Reference input current I_k = 10 mA, R1 = 10 kΩ, R2 = ∞ $T_{min} \le T_{amb} \le T_{max}$		1.8	4 6.5		1.8	4 6.5	µA
ΔI_{ref}	Reference input current deviation over temperature range I_k = 10 mA, R1 = 10 kΩ, R2 = ∞, $T_{min} \le T_{amb} \le T_{max}$		0.8	2.5		0.8	1.2	µA
I_{min}	Minimum cathode current for regulation $V_{KA} = V_{ref}$		0.5	1		0.5	0.6	mA
I_{off}	Off-state cathode current $T_{min} \le T_{amb} \le T_{max}$		2.6	1000 3000		2.6	1000 3000	nA
$\lvert ZKA \rvert$	Dynamic impedance (2) $V_{KA} = V_{ref}$, ΔI_k = 1 to 100 mA, F ≤ 1 kHz		0.22	0.5		0.22	0.5	Ω

1. See definition of *Section 3.1: Reference input voltage deviation over temperature range* below.
2. The dynamic impedance is defined as $\lvert ZKA \rvert = \frac{\Delta V_{KA}}{\Delta I_k}$

3.1 Reference input voltage deviation over temperature range

ΔV_{ref} is defined as the difference between the maximum and minimum values obtained over the full temperature range.

$$\Delta V_{ref} = V_{ref\ max} - V_{ref\ min}$$

Figure 4. Reference input voltage deviation over temperature range

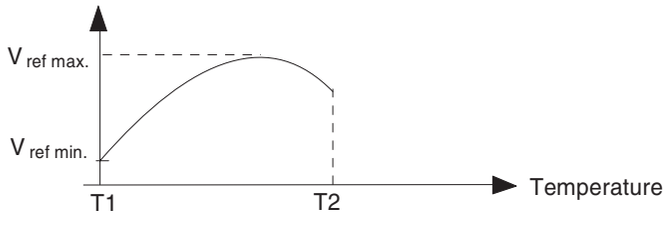

chanhvinh.com

Figure 5. Test circuit for $V_{KA} = V_{ref}$

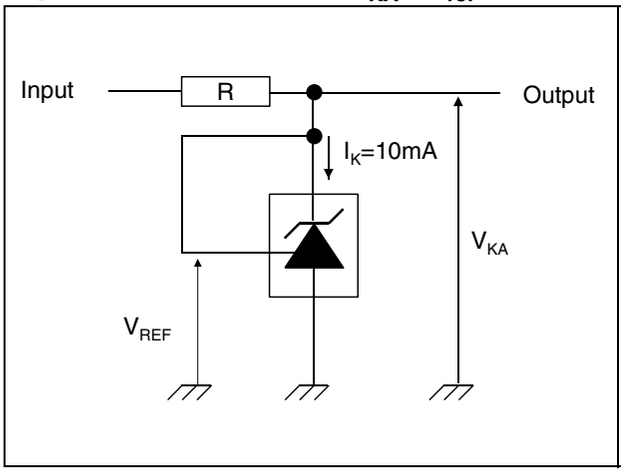

Figure 6. Test circuit for programming mode

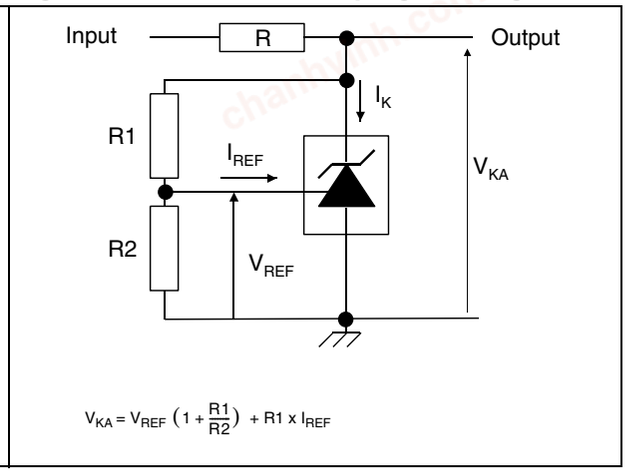

Figure 7. Test circuit for I_{off}

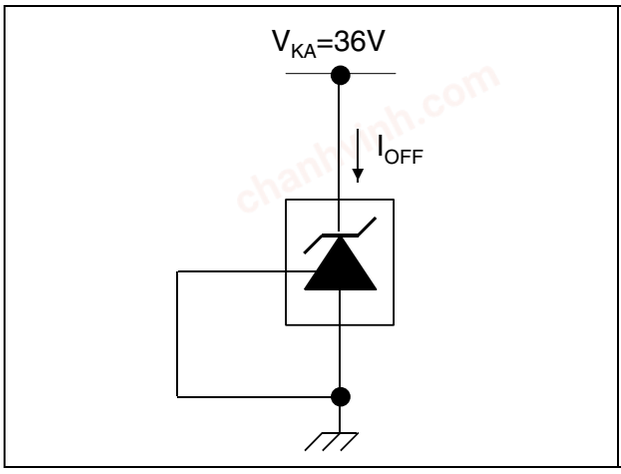

Figure 8. Test circuit for phase margin and voltage gain

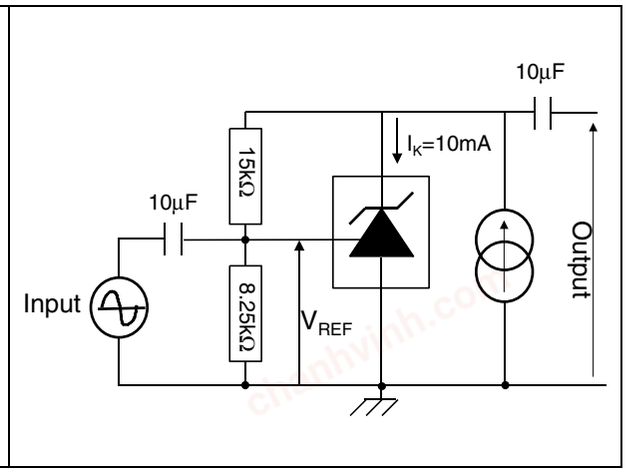

Figure 9. Test circuit for response time

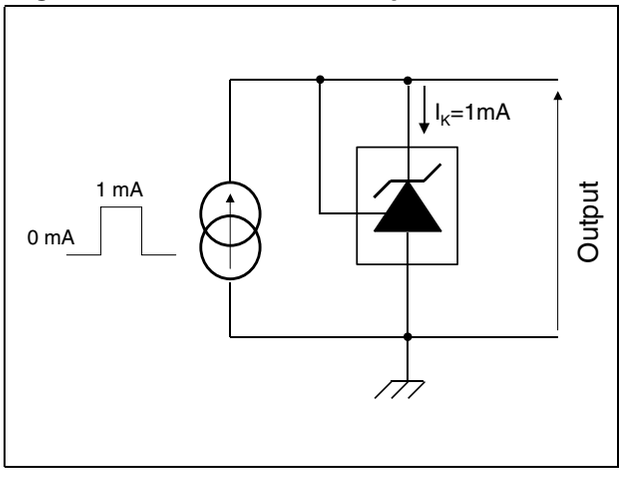

chanhvinh.com

Figure 10. Reference voltage vs. temperature

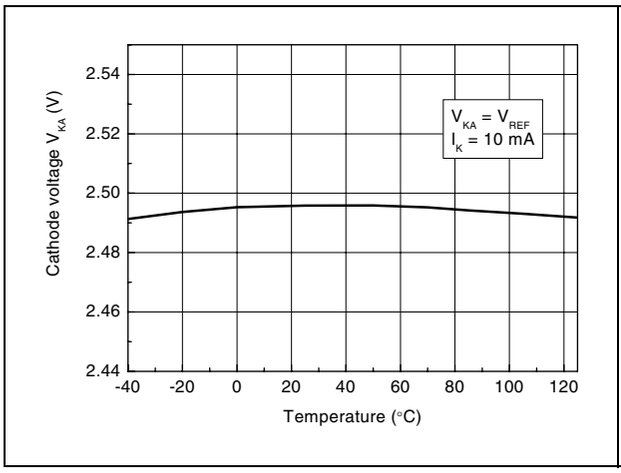

Figure 11. Reference voltage vs. cathode current

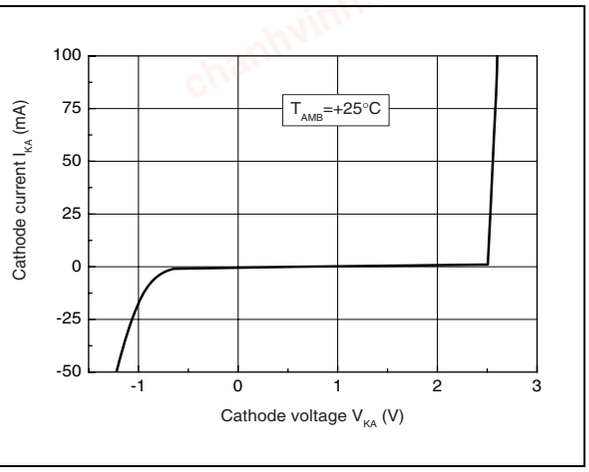

Figure 12. Zoom on reference voltage vs. cathode current

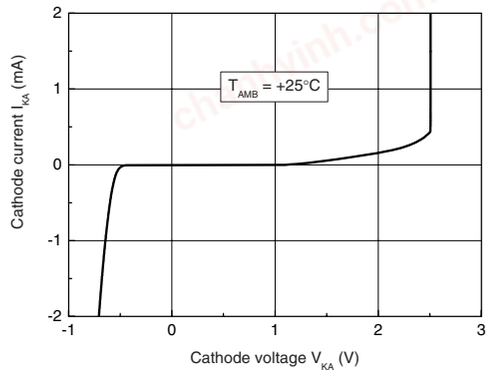

Figure 13. Reference current vs. temperature

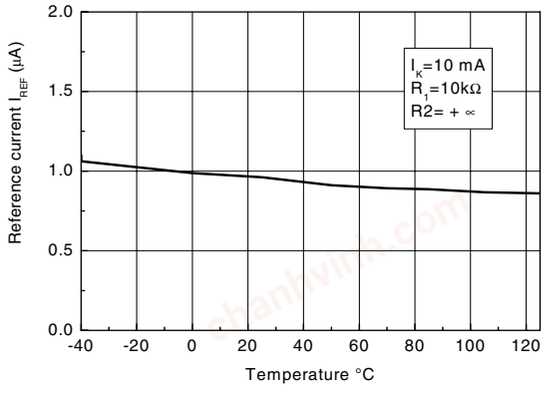

Figure 14. Off-state cathode current vs. temperature

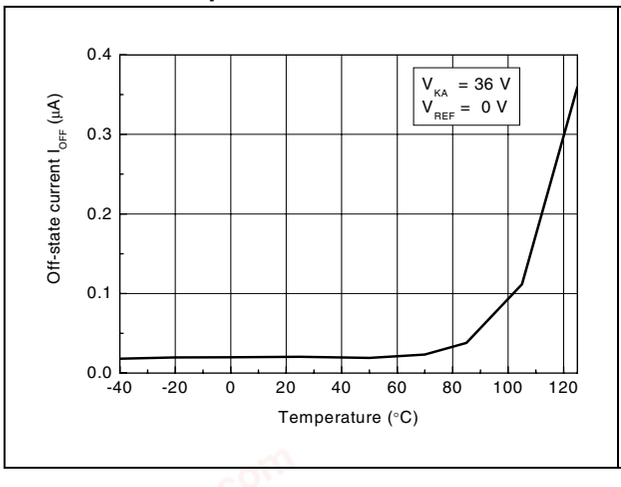

Figure 15. Ratio of change in V_{ref} to change in V_{KA} vs. temperature

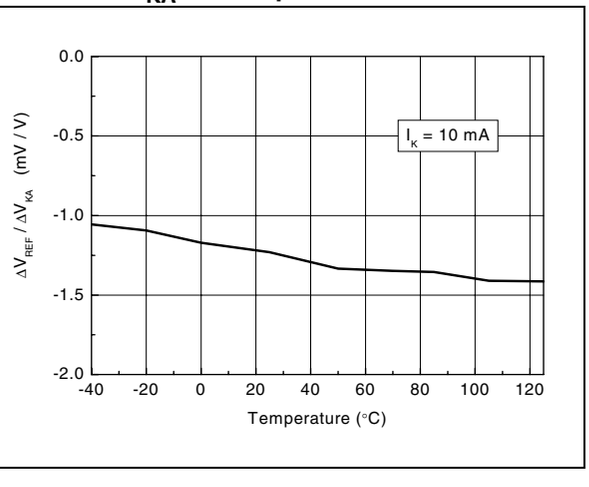

chanhvinh.com

Figure 16. Static impedance R_{KA} vs. temperature

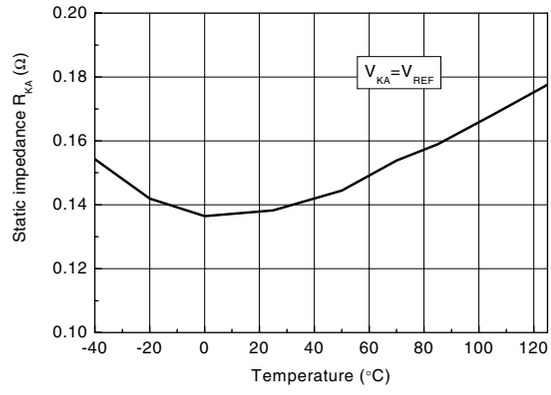

Figure 17. Minimum operating current vs. temperature

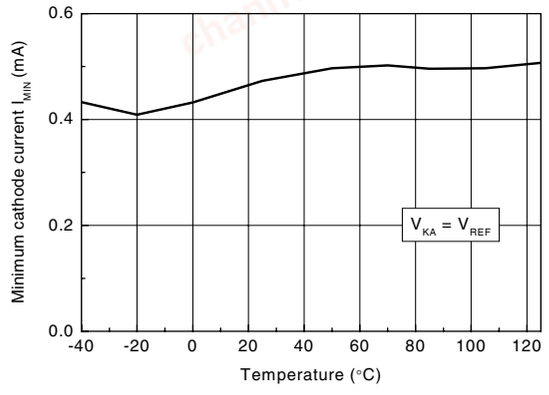

Figure 18. Gain and phase vs. frequency

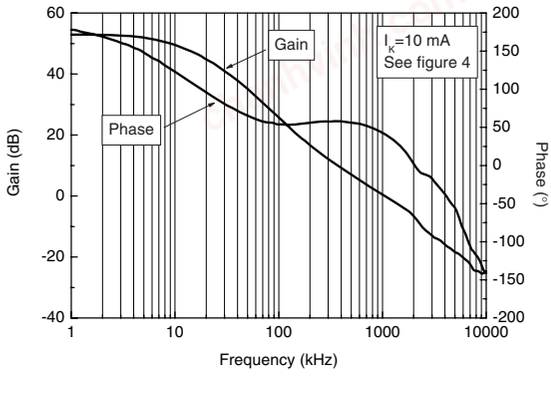

Figure 19. Stability behavior with capacitive loads

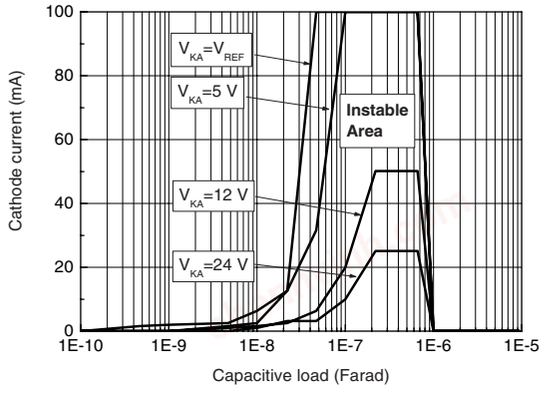

Figure 20. Maximum power dissipation

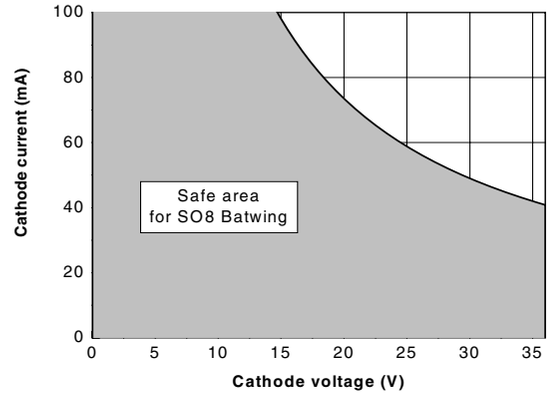

Figure 21. Pulse response for I_k = 1 mA

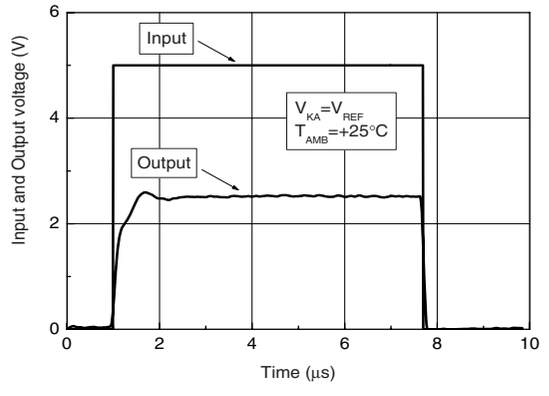

chanhvinh.com

4 Package information

In order to meet environmental requirements, ST offers these devices in different grades of ECOPACK® packages, depending on their level of environmental compliance. ECOPACK® specifications, grade definitions and product status are available at: *www.st.com*.
ECOPACK® is an ST trademark.

chanhvinh.com

4.1 SO-8 package information

Figure 22. SO-8 package mechanical drawing

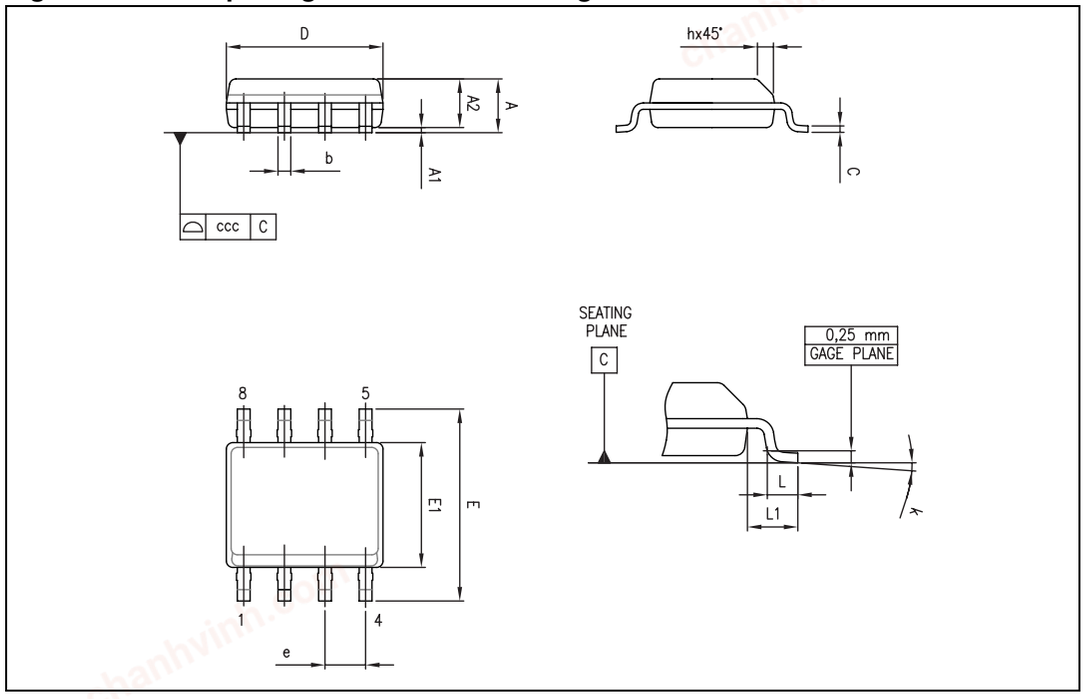

Table 6. SO-8 package mechanical data

Ref.	Dimensions					
	Millimeters			Inches		
	Min.	Typ.	Max.	Min.	Typ.	Max.
A			1.75			0.069
A1	0.10		0.25	0.004		0.010
A2	1.25			0.049		
b	0.28		0.48	0.011		0.019
c	0.17		0.23	0.007		0.010
D	4.80	4.90	5.00	0.189	0.193	0.197
E	5.80	6.00	6.20	0.228	0.236	0.244
E1	3.80	3.90	4.00	0.150	0.154	0.157
e		1.27			0.050	
h	0.25		0.50	0.010		0.020
L	0.40		1.27	0.016		0.050
L1		1.04			0.040	
k	1°		8°	1°		8°
ccc			0.10			0.004

chanhvinh.com

4.2 TO-92 ammopack and tape and reel package information

Figure 23. TO-92 ammopack and tape and reel package mechanical drawing

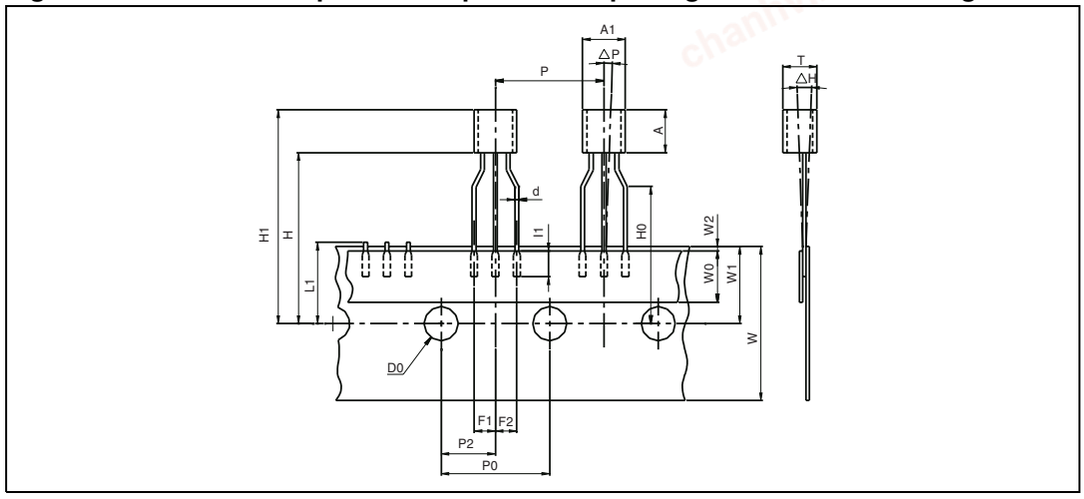

Table 7. TO-92 ammopack and tape and reel package mechanical data

Dim.	Millimeters			Inches		
	Min	Typ.	Max.	Min.	Typ.	Max.
AL			5.0			0.197
A			5.0			0.197
T			4.0			0.157
d		0.45			0.018	
I1	2.5			0.098		
P	11.7	12.7	13.7	0.461	0.500	0.539
PO	12.4	12.7	13	0.488	0.500	0.512
P2	5.95	6.35	6.75	0.234	0.250	0.266
F1/F2	2.4	2.5	2.8	0.094	0.098	0.110
Δh	-1	0	1	-0.039	0	0.039
ΔP	-1	0	1	-0.039	0	0.039
W	17.5	18.0	19.0	0.689	0.709	0.748
W0	5.7	6	6.3	0.224	0.236	0.248
W1	8.5	9	9.75	0.335	0.354	0.384
W2			0.5			0.020
H			20			0.787
H0	15.5	16	16.5	0.610	0.630	0.650
H1			25			0.984
DO	3.8	4.0	4.2	0.150	0.157	0.165
L1			11			0.433

chanhvinh.com

4.3 TO-92 (bulk) package information

Figure 24. TO-92 bulk package mechanical drawing

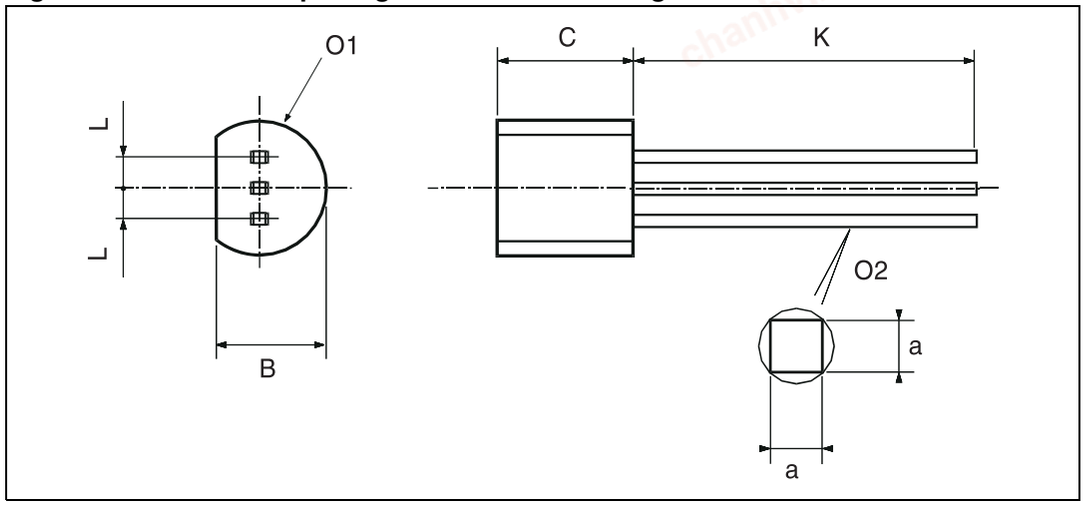

Table 8. TO-92 bulk package mechanical data

Dim.	Millimeters			Inches		
	Min	Typ.	Max.	Min.	Typ.	Max.
L		1.27			0.05	
B	3.2	3.7	4.2	0.126	0.1457	0.1654
O1	4.45	5.00	5.2	0.1752	0.1969	0.2047
C	4.58	5.03	5.33	0.1803	0.198	0.2098
K	12.7			0.5		
O2	0.407	0.5	0.508	0.016	0.0197	0.02
a	0.35			0.0138		

chanhvinh.com

5 Ordering information

Table 9. Order codes

Order code	Accuracy (%)	Temperature range	Package	Packing	Marking
TL431CD TL431CDT	2	0°C to +70°C	SO-8	Tube or Tape and reel	431C
TL431ACD TL431ACDT	1				431AC
TL431CZ TL431CZT TL431CZ-AP	2		TO-92	Bulk or Tape or Ammopack	TL431C
TL431ACZ TL431ACZT TL431ACZ-AP	1				TL431AC
TL431ID TL431IDT	2	-40°C to + 105°C	SO-8	Tube or tape and reel	431I
TL431AID TL431AIDT	1				431AI
TL431IZ TL431IZT TL431IZ-AP	2		TO-92	Bulk or Tape or Ammopack	TL431I
TL431AIZ TL431AIZT TL431AIZ-AP	1				TL431AI
TL431IYD(1) TL431IYDT(1)	2	-40°C to + 125°C	SO-8 (Automotive grade level)	Tube or tape and reel	431IY
TL431AIYD(1) TL431AIYDT(1)	1				431AIY

1. Qualification and characterization according to AEC Q100 and Q003 or equivalent, advanced screening according to AEC Q001 & Q 002 or equivalent.

chanhvinh.com

6 Revision history

Table 10. Document revision history

Date	Revision	Changes
01-Mar-2002	1	Initial release.
01-Nov-2005	2	PPAP references inserted in order codes table on cover page.
13-Dec-2006	3	Corrected TO-92 package information.
08-Jun-2007	4	Specified that SO-8 package is batwing package. In electrical characteristics tables, moved negative values from max column to min column. Corrected captions of *Figure 5* and of *Figure 16*. Added footnote to *Table 8: Order codes*.
25-Feb-2008	5	Corrected SO-8 package mechanical data. Corrected footnote for automotive grade order codes in order code table. Corrected packing information for TO-92 devices in order code table.
04-Jun-2009	6	Changed *Imin* to 0.6 mA in *Table 3* and *Table 4*. Increased temperature range to 125°C in temperature curves. Added *Table 5*, dedicated to automotive version. Increased high temperature for automotive range up to +125°C in *Table 5* and in *Table 9: Order codes*. Inserted accuracy column in *Table 9*.
09-Jun-2009	7	Corrected minor error in package column in *Table 9*.

chanhvinh.com

Please Read Carefully:

Information in this document is provided solely in connection with ST products. STMicroelectronics NV and its subsidiaries (“ST”) reserve the right to make changes, corrections, modifications or improvements, to this document, and the products and services described herein at any time, without notice.

All ST products are sold pursuant to ST’s terms and conditions of sale.

Purchasers are solely responsible for the choice, selection and use of the ST products and services described herein, and ST assumes no liability whatsoever relating to the choice, selection or use of the ST products and services described herein.

No license, express or implied, by estoppel or otherwise, to any intellectual property rights is granted under this document. If any part of this document refers to any third party products or services it shall not be deemed a license grant by ST for the use of such third party products or services, or any intellectual property contained therein or considered as a warranty covering the use in any manner whatsoever of such third party products or services or any intellectual property contained therein.

UNLESS OTHERWISE SET FORTH IN ST’S TERMS AND CONDITIONS OF SALE ST DISCLAIMS ANY EXPRESS OR IMPLIED WARRANTY WITH RESPECT TO THE USE AND/OR SALE OF ST PRODUCTS INCLUDING WITHOUT LIMITATION IMPLIED WARRANTIES OF MERCHANTABILITY, FITNESS FOR A PARTICULAR PURPOSE (AND THEIR EQUIVALENTS UNDER THE LAWS OF ANY JURISDICTION), OR INFRINGEMENT OF ANY PATENT, COPYRIGHT OR OTHER INTELLECTUAL PROPERTY RIGHT.

UNLESS EXPRESSLY APPROVED IN WRITING BY AN AUTHORIZED ST REPRESENTATIVE, ST PRODUCTS ARE NOT RECOMMENDED, AUTHORIZED OR WARRANTED FOR USE IN MILITARY, AIR CRAFT, SPACE, LIFE SAVING, OR LIFE SUSTAINING APPLICATIONS, NOR IN PRODUCTS OR SYSTEMS WHERE FAILURE OR MALFUNCTION MAY RESULT IN PERSONAL INJURY, DEATH, OR SEVERE PROPERTY OR ENVIRONMENTAL DAMAGE. ST PRODUCTS WHICH ARE NOT SPECIFIED AS "AUTOMOTIVE GRADE" MAY ONLY BE USED IN AUTOMOTIVE APPLICATIONS AT USER’S OWN RISK.

Resale of ST products with provisions different from the statements and/or technical features set forth in this document shall immediately void any warranty granted by ST for the ST product or service described herein and shall not create or extend in any manner whatsoever, any liability of ST.

ST and the ST logo are trademarks or registered trademarks of ST in various countries.

Information in this document supersedes and replaces all information previously supplied.

The ST logo is a registered trademark of STMicroelectronics. All other names are the property of their respective owners.

© 2009 STMicroelectronics - All rights reserved

STMicroelectronics group of companies

Australia - Belgium - Brazil - Canada - China - Czech Republic - Finland - France - Germany - Hong Kong - India - Israel - Italy - Japan - Malaysia - Malta - Morocco - Philippines - Singapore - Spain - Sweden - Switzerland - United Kingdom - United States of America

www.st.com