chanhvinh.com

T4 series

4 A Triacs

Datasheet – production data

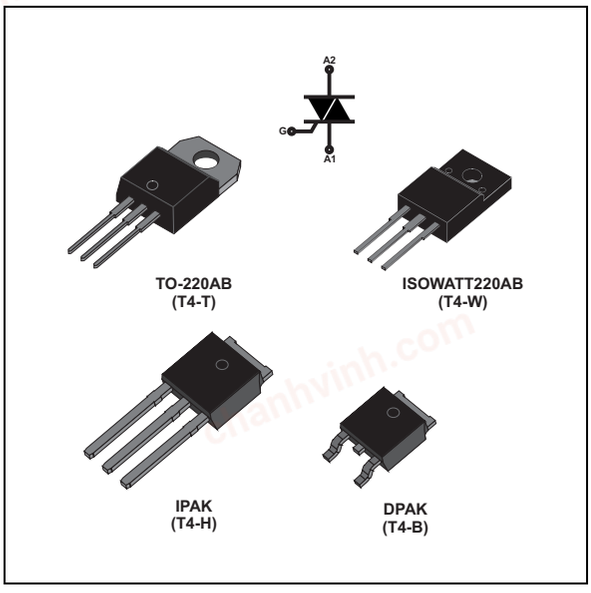

Table 1. Main characteristics

Symbol	Value	Unit
$I_{T(rms)}$	4	A
V_{DRM}, V_{RRM}	600 to 800	V
I_{GT}	5 to 35	mA

Table 2. Device summary

Symbol	Marking
T405-xxxB	see *Table 12*
T405-xxxB-TR	
T405-xxxH	
T405-xxxT	
T405-xxxW	
T410-xxxB	
T410-xxxB-TR	
T410-xxxH	
T410-xxxT	
T410-xxxW	
T435-xxxB	
T435-xxxB-TR	
T435-xxxH	
T435-xxxT	
T435-xxxW	

xxx = Voltage: 600 V, 700 V or 800 V (see *Table 11*).

Features

- Three quadrants Triacs
- 600 to 800 V V_{DRM}/V_{RRM}
- UL certified (ref. file E81734)

Applications

- General purpose AC inductive loads
- Motor control circuits
- Small home appliances

Description

Based on ST's Snubberless / Logic level technology providing high commutation performances, the T4 series is suitable for use on AC inductive loads. They are recommended for applications using universal motors, electro valves, kitchen aid equipments, power tools, dishwashers. Available in a fully insulated package, the T4yy-xxxW version complies with UL standards (ref.E81734).

This is information on a product in full production. www.st.com

chanhvinh.com

1 Characteristics

Table 3. Absolute maximum ratings (T_j = 25 °C unless otherwise stated)

Symbol	Parameter			Value	Unit
$I_{T(rms)}$	On-state rms current (full sine wave)	IPAK, DPAK, TO-220AB	T_c = 110 °C	4	A
		ISOWATT220AB	T_c = 105 °C		
I_{TSM}	Non repetitive surge peak on-state current (full cycle, T_j initial = 25 °C)	F = 50 Hz	t = 20 ms	30	A
		F = 60 Hz	t = 16.7 ms	31	
I^2t	I^2t value for fusing		t_p = 10 ms	5.1	A^2s
dI/dt	Critical rate of rise of on-state current I_G = 2 x I_{GT}, $t_r \leq$ 100 ns	F = 120 Hz	T_j = 125 °C	50	A/µs
I_{GM}	Peak gate current	t_p = 20 µs	T_j = 125 °C	4	A
$P_{G(AV)}$	Average gate power dissipation		T_j = 125 °C	1	W
T_{stg} T_j	Storage junction temperature range Operating junction temperature range			- 40 to + 150 - 40 to + 150	°C

Table 4. Electrical characteristics (T_j = 25 °C, unless otherwise stated)

Symbol	Test conditions	Quadrant		Value			Unit
				T405	T410	T435	
I_{GT} (1)	V_D = 12 V, R_L = 30 Ω	I - II - III	Max.	5	10	35	mA
V_{GT}	V_D = 12 V, R_L = 30 Ω	I - II - III	Max.	1.3			V
V_{GD}	V_D = V_{DRM}, R_L = 3.3 kΩ , T_j = 125 °C	I - II - III	Min.	0.2			V
I_H (2)	I_T = 100 mA		Max.	10	15	35	mA
I_L	I_G = 1.2 I_{GT}	I - III	Max.	10	25	50	mA
		II	Max.	15	30	60	
dV/dt (2)	V_D = 67% V_{DRM}, gate open	T_j = 125 °C	Min.	20	40	400	V/µs
(dI/dt)c (2)	(dV/dt)c = 0.1 V/µs	T_j = 125 °C	Min.	1.8	2.7		A/ms
	(dV/dt)c = 10 V/µs			0.9	2.0		
	(without snubber)					2.5	

1. Minimum I_{GT} is guaranteed at 5% of I_{GT} max.
2. For both polarities of A2 referenced to A1

chanhvinh.com

Table 5. Static characteristics

Symbol	Test conditions			Value	Unit
V_{TM} (1)	I_{TM} = 8.5 A, t_p = 380 µs	T_j = 25 °C	Max.	1.56	V
V_{t0} (1)	Threshold voltage	T_j = 125 °C	Max.	0.89	V
R_d (1)	Dynamic resistance	T_j = 125 °C	Max.	120	mΩ
I_{DRM} I_{RRM}	V_{DRM} = V_{RRM}	T_j = 25 °C	Max.	5	µA
		T_j = 125 °C		1	mA

1. For both polarities of A2 referenced to A1

Table 6. Thermal resistance

Symbol	Parameter			Value	Unit
$R_{th(j-c)}$	Junction to case (AC)		IPAK, DPAK,TO-220AB	2.6	°C/W
			ISOWATT220AB	4.0	
$R_{th(j-a)}$	Junction to ambient (DC)	S(1) = 0.5 cm²	DPAK	70	°C/W
	Junction to ambient (DC)		ISOWATT220AB, TO-220AB	60	
			IPAK	100	

1. S = Copper surface under tab.

chanhvinh.com

Figure 1. Maximum power dissipation versus RMS on-state current (full cycle)

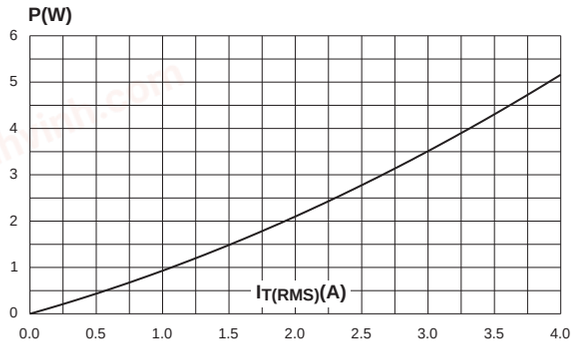

Figure 2. RMS on-state current versus case temperature (full cycle)

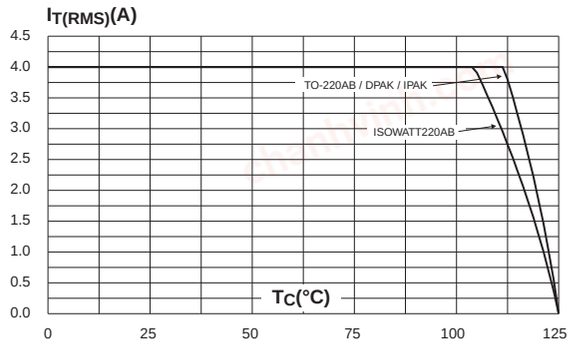

Figure 3. RMS on-state current versus ambient temperature (printed circuit board FR4, copper thickness: 35µm) (full cycle)

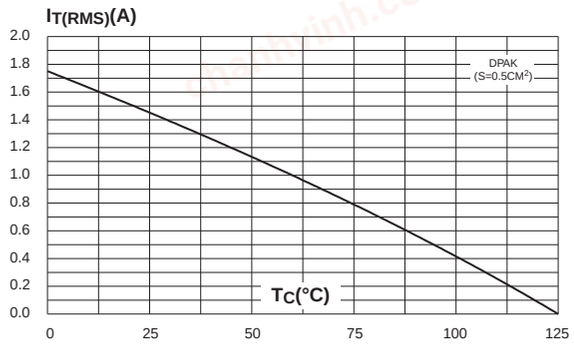

Figure 4. Relative variation of thermal impedance versus pulse duration

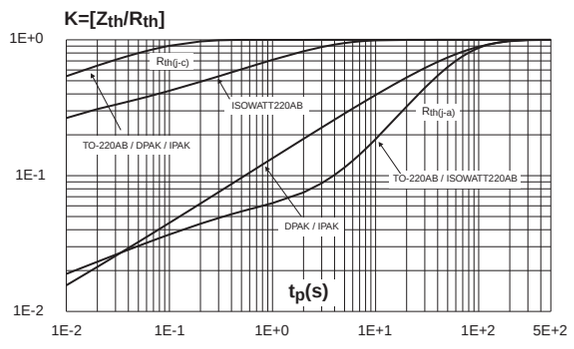

Figure 5. On-state characteristics (maximum values)

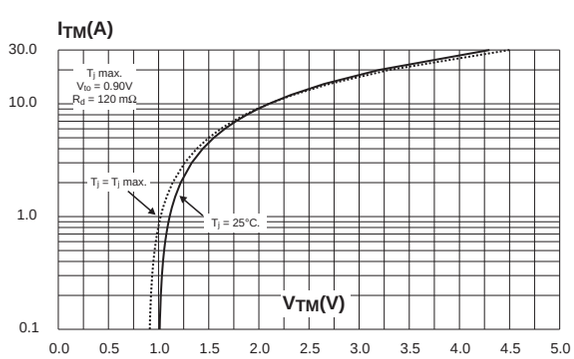

Figure 6. Surge peak on-state current versus number of cycles

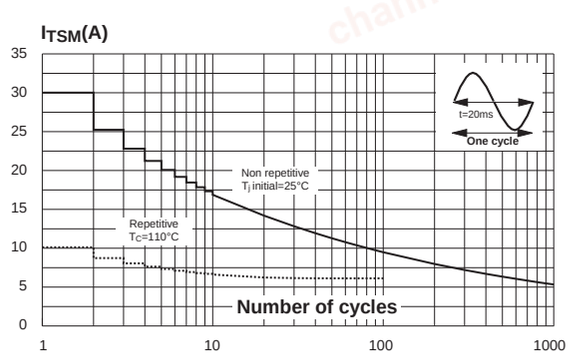

chanhvinh.com

Figure 7. Non-repetitive surge peak on-state current for a sinusoidal pulse with width t_p < 10 ms and corresponding value of I^2t

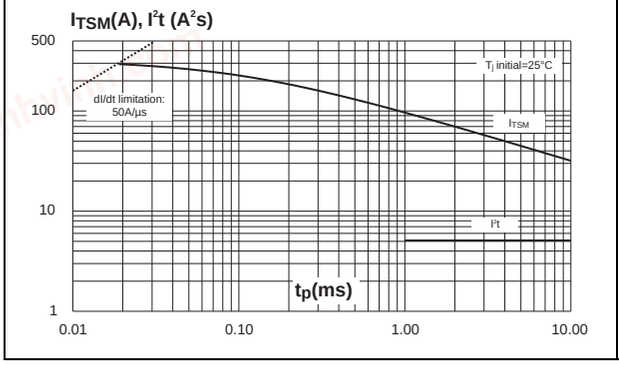

Figure 8. Relative variation of gate trigger current, holding current and latching current versus junction temperature (typical values)

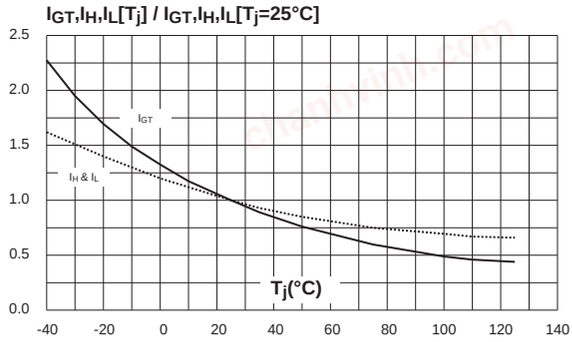

Figure 9. Relative variation of critical rate of decrease of main current versus (dV/dt)c (typical values)

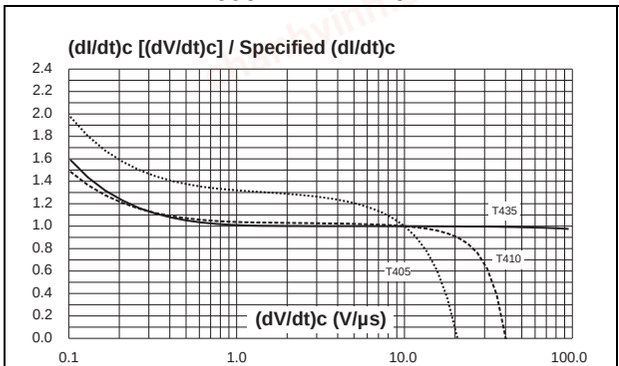

Figure 10. Relative variation of critical rate of decrease of main current versus junction temperature

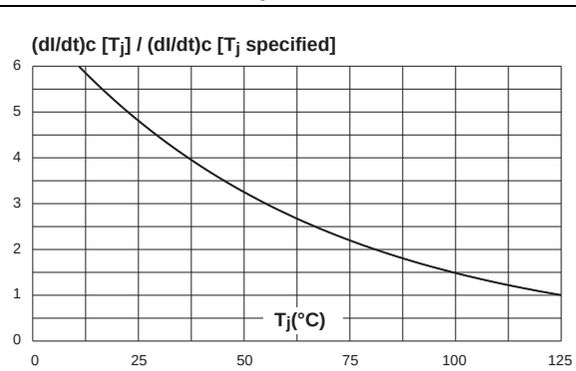

Figure 11. DPAK thermal resistance junction to ambient versus copper surface under tab (printed circuit board FR4, copper thickness: 35 µm)

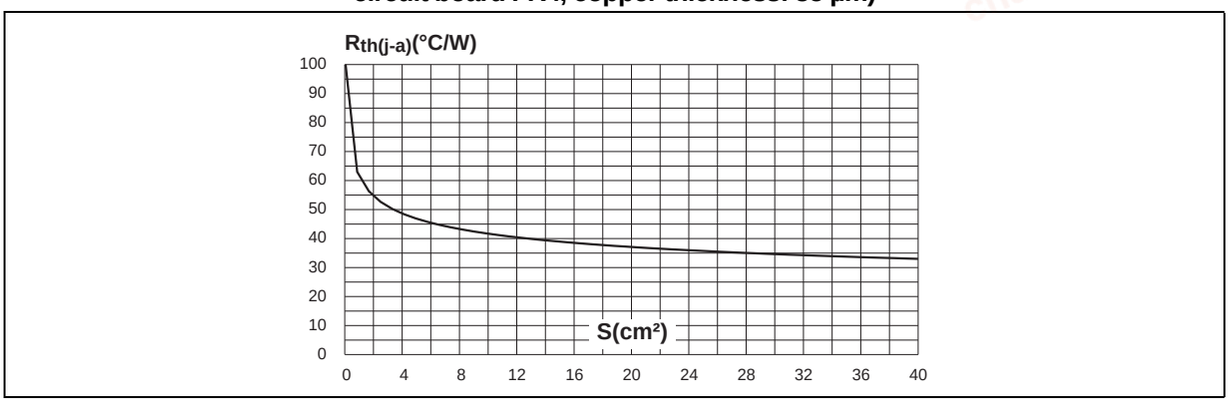

chanhvinh.com

2 Package information

- Epoxy meets UL94, V0
- Lead-free package
- Recommended torque: 0.4 to 0.6 N·m

In order to meet environmental requirements, ST offers these devices in different grades of ECOPACK® packages, depending on their level of environmental compliance. ECOPACK® specifications, grade definitions and product status are available at: www.st.com. ECOPACK® is an ST trademark.

Figure 12. DPAK dimension definitions

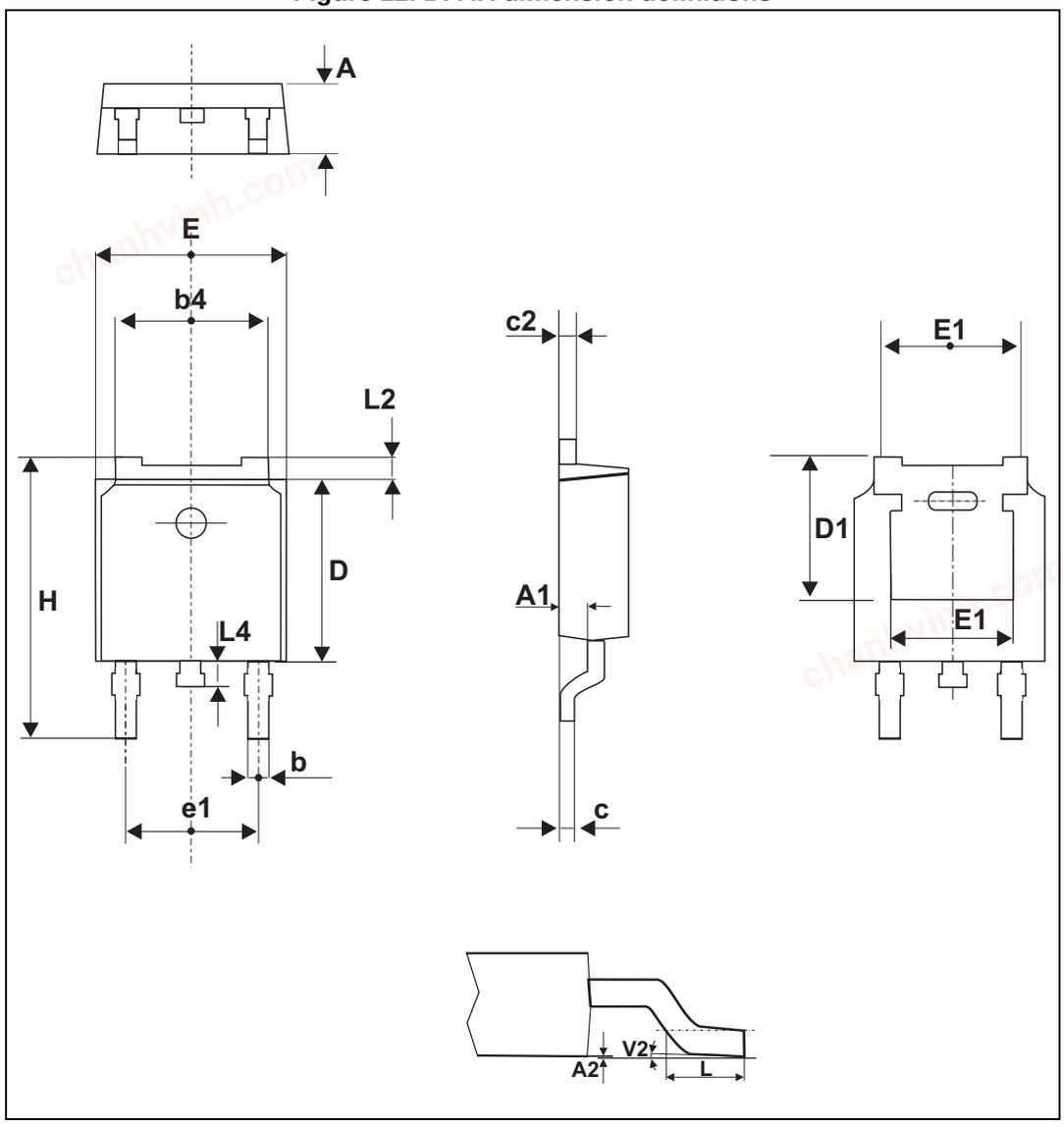

Note: this package drawing may slightly differ from the physical package. However, all the specified dimensions are guaranteed.

chanhvinh.com

Table 7. DPAK dimension values

Ref.	Dimensions					
	Millimeters			Inches		
	Min.	Typ.	Max.	Min.	Typ.	Max.
A	2.18		2.40	0.086		0.094
A1	0.90		1.10	0.035		0.043
A2	0.03		0.23	0.001		0.009
b	0.64		0.90	0.025		0.035
b4	4.95		5.46	0.195		0.215
c	0.46		0.61	0.018		0.024
c2	0.46		0.60	0.018		0.023
D	5.97		6.22	0.235		0.244
D1	5.10			0.201		
E	6.35		6.73	0.250		0.264
E1		4.32			0.170	
e1	4.40		4.70	0.173		0.185
H	9.35		10.40	0.368		0.409
L	1.00		1.78	0.039		0.070
L2			1.27			0.05
L4	0.60		1.02	0.023		0.040
V2	0°		8°	0°		8°

Figure 13. Footprint (dimensions in mm)

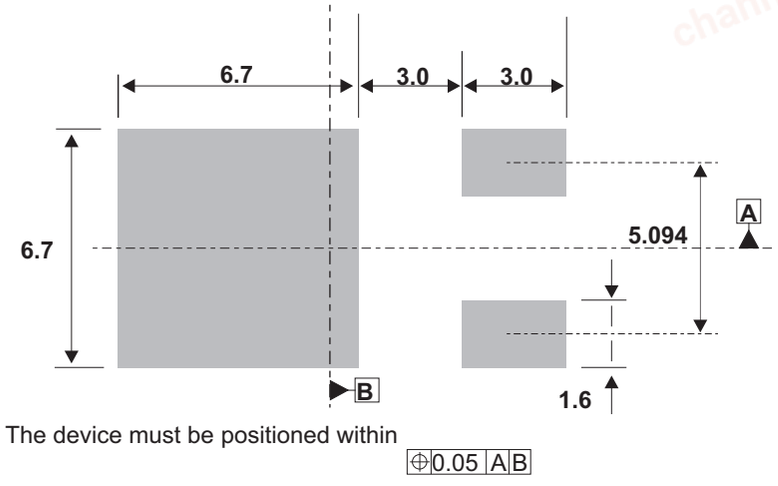

chanhvinh.com

Figure 14. ISOWATT220AB dimension definitions

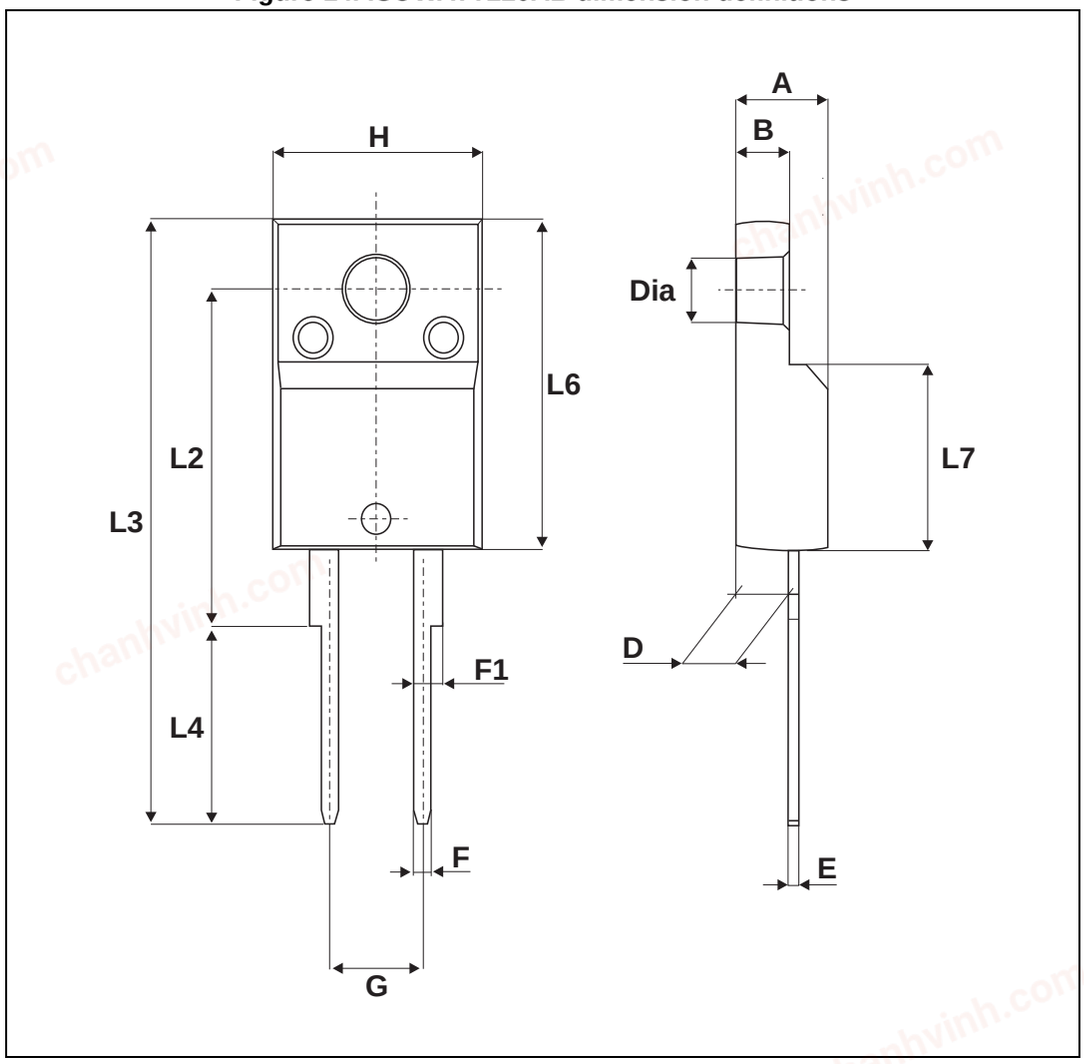

chanhvinh.com

Table 8. ISOWATT220AB dimension values

Ref.	Dimensions					
	Millimeters			Inches		
	Min.	Typ.	Max.	Min.	Typ.	Max.
A	4.40		4.60	0.173		0.181
B	2.50		2.70	0.098		0.106
D	2.50		2.75	0.098		0.108
E	0.40		0.70	0.016		0.028
F	0.75		1.00	0.030		0.039
F1	1.15		1.70	0.045		0.067
F2	1.15		1.70	0.045		0.067
G	4.95		5.20	0.195		0.205
G1	2.40		2.70	0.094		0.106
H	10.00		10.40	0.394		0.409
L2	16.00 typ.			0.630 typ.		
L3	28.60		30.60	1.125		1.205
L4	9.80		10.60	0.386		0.417
L6	15.90		16.40	0.626		0.646
L7	9.00		9.30	0.354		0.366
Diam	3.00		3.20	0.118		0.126

chanhvinh.com

Figure 15. IPAK dimension definitions

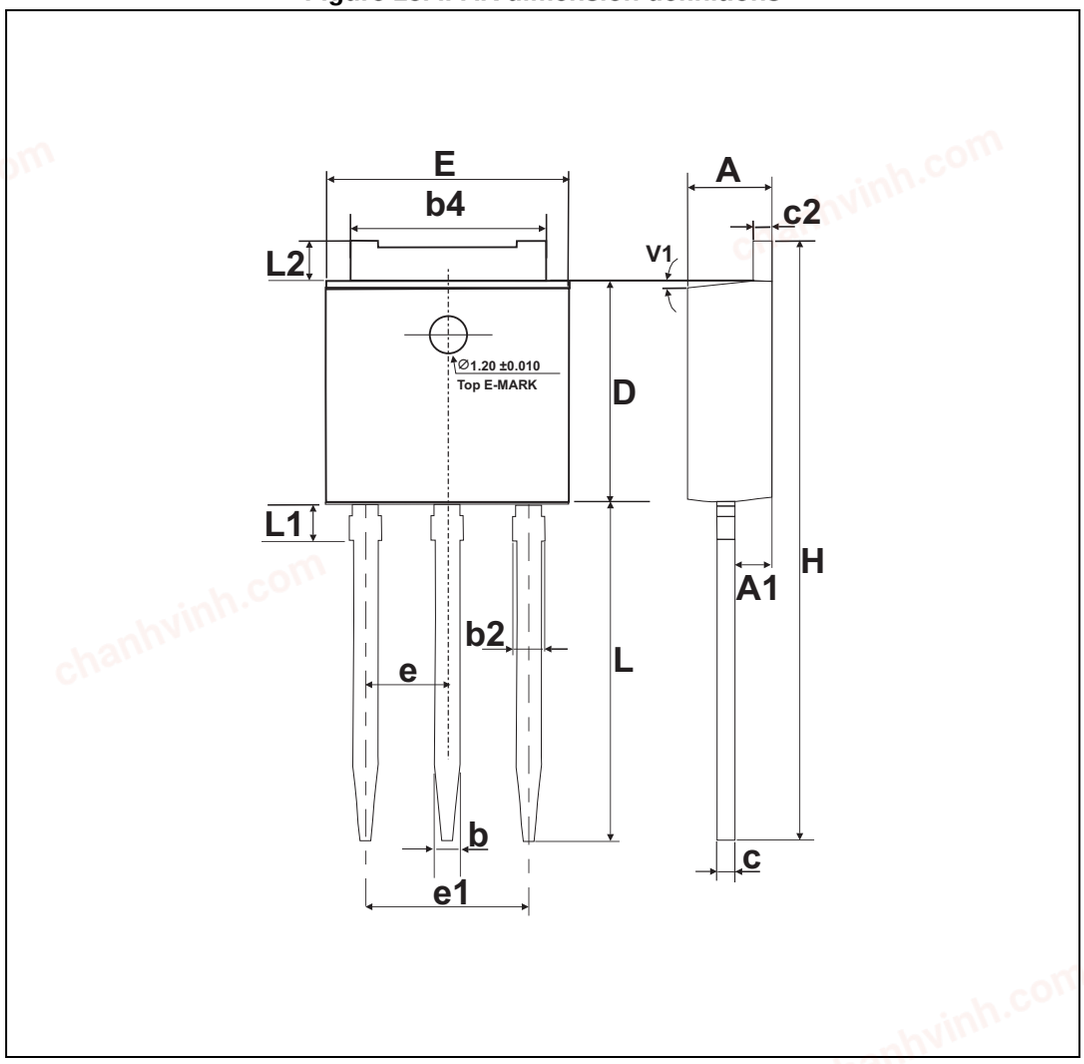

Note: This package drawing may slightly differ from the physical package. However, all the specified dimensions are guaranteed.

chanhvinh.com

Table 9. IPAK dimension values

Ref.	Dimensions					
	Millimeters			Inches		
	Min.	Typ.	Max.	Min.	Typ.	Max.
A	2.20		2.40	0.086		0.094
A1	0.90		1.10	0.035		0.043
b	0.64		0.90	0.025		0.035
b2			0.95			0.037
b4	5.20		5.43	0.204		0.213
c	0.45		0.60	0.017		0.023
c2	0.46		0.60	0.018		0.023
D	6		6.20	0.236		0.244
E	6.40		6.70	0.252		0.263
e		2.28			0.090	
e1	4.40		4.60	0.173		0.181
H		16.10			0.634	
L	9		9.60	0.354		0.377
L1	0.8		1.20	0.031		0.047
L2		0.80	1.25		0.031	0.049
V1		10°			10°	

chanhvinh.com

Figure 16. TO-220AB (NIns. & Ins. 20-up) dimension definitions

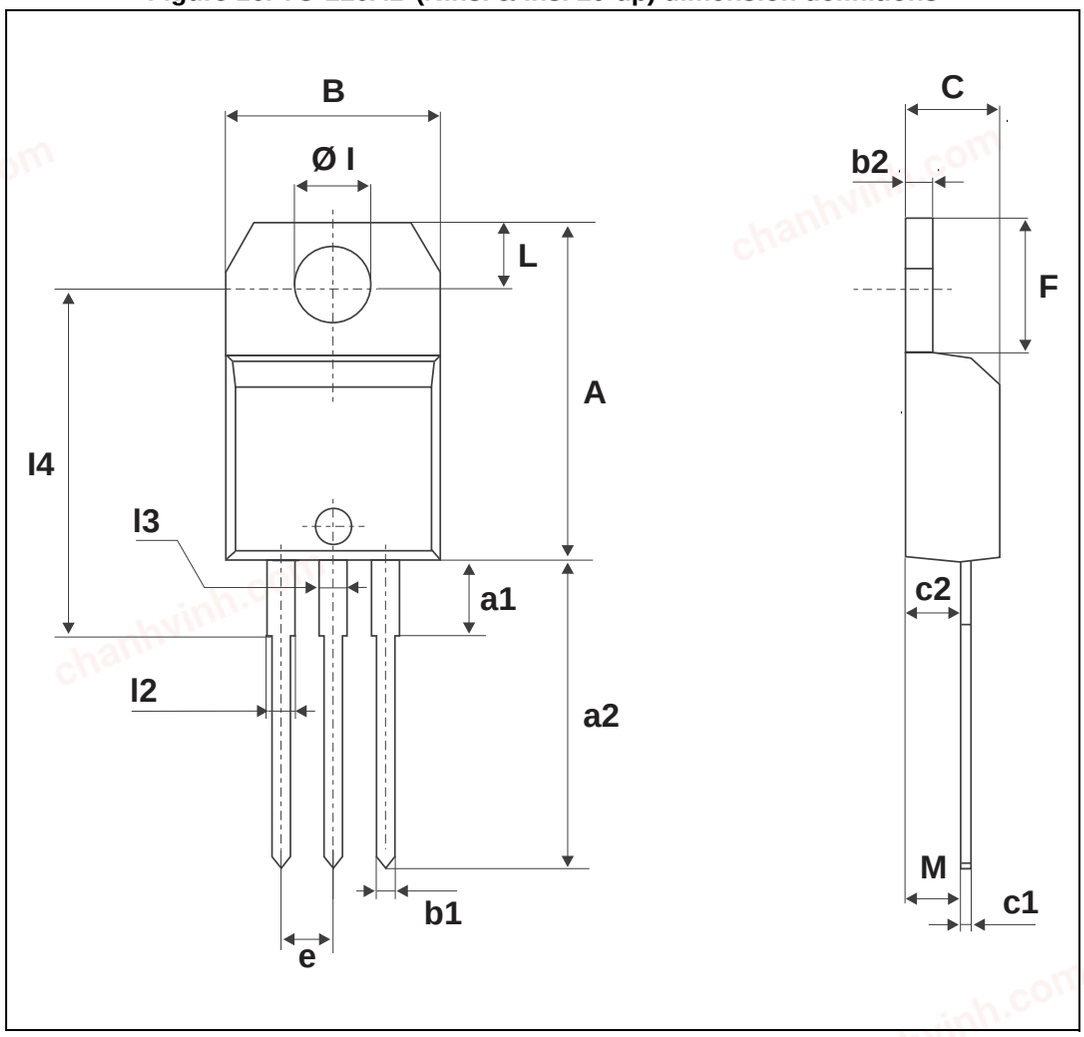

chanhvinh.com

Table 10. TO-220AB (NIns. & Ins. 20-up) dimension values

Ref.	Dimensions					
	Millimeters			Inches		
	Min.	Typ.	Max.	Min.	Typ.	Max.
A	15.20		15.90	0.598		0.625
a1		3.75			0.147	
a2	13.00		14.00	0.511		0.551
B	10.00		10.40	0.393		0.409
b1	0.61		0.88	0.024		0.034
b2	1.23		1.32	0.048		0.051
C	4.40		4.60	0.173		0.181
c1	0.49		0.70	0.019		0.027
c2	2.40		2.72	0.094		0.107
e	2.40		2.70	0.094		0.106
F	6.20		6.60	0.244		0.259
ØI	3.75		3.85	0.147		0.151
I4	15.80	16.40	16.80	0.622	0.646	0.661
L	2.65		2.95	0.104		0.116
I2	1.14		1.70	0.044		0.066
I3	1.14		1.70	0.044		0.066
M		2.60			0.102	

chanhvinh.com

3 Ordering information

Figure 17. Order information scheme

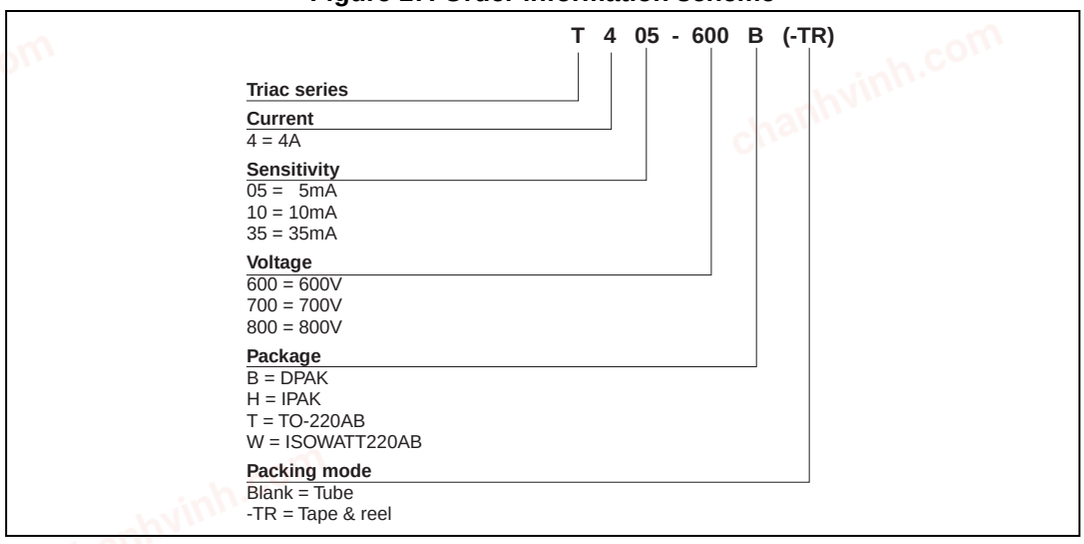

Table 11. Product selector

Part Number	Voltage (xxx)			Sensitivity	Type	Package
	600 V	700 V	800 V			
T405-xxxB	X	X	X	5 mA	Logic level	DPAK
T405-xxxB-TR	X	X	X	5 mA	Logic level	DPAK
T405-xxxH	X		X	5 mA	Logic level	IPAK
T405-xxxT	X			5 mA	Logic level	TO-220AB
T405-xxxW	X			5 mA	Logic level	ISOWATT220AB
T410-xxxB	X		X	10 mA	Logic Level	DPAK
T410-xxxB-TR	X		X	10 mA	Logic Level	DPAK
T410-xxxH	X		X	10 mA	Logic Level	IPAK
T410-xxxT	X	X	X	10 mA	Logic Level	TO-220AB
T410-xxxW	X			10 mA	Logic Level	ISOWATT220AB
T435-xxxB	X	X	X	35 mA	Snubberless	DPAK
T435-xxxB-TR	X	X	X	35 mA	Snubberless	DPAK
T435-xxxH	X		X	35 mA	Snubberless	IPAK
T435-xxxT	X		X	35 mA	Snubberless	TO-220AB
T435-xxxW	X		X	35 mA	Snubberless	ISOWATT220AB

Blank = Unavailable

chanhvinh.com

Table 12. Ordering information

Order code	Marking	Package	Weight	Base qty	Delivery mode
T405-600B	T4 0560	DPAK	0.3 g	75	Tube
T410-600B	T4 1060				
T435-600B	T4 3560				
T405-700B	T4 0570				
T435-700B	T4 3570				
T405-800B	T4 0580				
T410-800B	T4 1080				
T435-800B	T4 3580				
T405-600B-TR	T4 0560			2500	Tape and reel
T410-600B-TR	T4 1060				
T435-600B-TR	T4 3560				
T405-700B-TR	T4 0570			75	Tube
T435-700B-TR	T4 3570				
T405-800B-TR	T4 0580				
T410-800B-TR	T4 1080				
T435-800B-TR	T4 3580				
T405-600H	T4 0560	IPAK	0.4		
T410-600H	T4 1060				
T435-600H	T4 3560				
T405-800H	T4 0580				
T410-800H	T4 1080				
T435-800H	T4 3580				
T405-600T	T405-600T	TO-220AB	2.3	50	
T410-600T	T410-600T				
T435-600T	T435-600T				
T410-700T	T410-700T				
T410-800T	T410-800T				
T435-800T	T435-800T				
T405-600W	T405-600W	ISOWATT220AB	2.1		
T410-600W	T410-600W				
T435-600W	T435-600W				
T435-800W	T435-800W				

chanhvinh.com

4 Revision history

Table 13. Document revision history

Date	Revision	Changes
Jun-2003	2	Last updated.
25-Mar-2005	3	Layout updated0 No content change.
25-Jan-2006	4	Markings changed in *Table 12*.
23-May-2014	5	Updated DPAK and IPAK package information and reformatted to current standard.

chanhvinh.com

Please Read Carefully:

Information in this document is provided solely in connection with ST products. STMicroelectronics NV and its subsidiaries (“ST”) reserve the right to make changes, corrections, modifications or improvements, to this document, and the products and services described herein at any time, without notice.

All ST products are sold pursuant to ST’s terms and conditions of sale.

Purchasers are solely responsible for the choice, selection and use of the ST products and services described herein, and ST assumes no liability whatsoever relating to the choice, selection or use of the ST products and services described herein.

No license, express or implied, by estoppel or otherwise, to any intellectual property rights is granted under this document. If any part of this document refers to any third party products or services it shall not be deemed a license grant by ST for the use of such third party products or services, or any intellectual property contained therein or considered as a warranty covering the use in any manner whatsoever of such third party products or services or any intellectual property contained therein.

UNLESS OTHERWISE SET FORTH IN ST’S TERMS AND CONDITIONS OF SALE ST DISCLAIMS ANY EXPRESS OR IMPLIED WARRANTY WITH RESPECT TO THE USE AND/OR SALE OF ST PRODUCTS INCLUDING WITHOUT LIMITATION IMPLIED WARRANTIES OF MERCHANTABILITY, FITNESS FOR A PARTICULAR PURPOSE (AND THEIR EQUIVALENTS UNDER THE LAWS OF ANY JURISDICTION), OR INFRINGEMENT OF ANY PATENT, COPYRIGHT OR OTHER INTELLECTUAL PROPERTY RIGHT.

ST PRODUCTS ARE NOT DESIGNED OR AUTHORIZED FOR USE IN: (A) SAFETY CRITICAL APPLICATIONS SUCH AS LIFE SUPPORTING, ACTIVE IMPLANTED DEVICES OR SYSTEMS WITH PRODUCT FUNCTIONAL SAFETY REQUIREMENTS; (B) AERONAUTIC APPLICATIONS; (C) AUTOMOTIVE APPLICATIONS OR ENVIRONMENTS, AND/OR (D) AEROSPACE APPLICATIONS OR ENVIRONMENTS. WHERE ST PRODUCTS ARE NOT DESIGNED FOR SUCH USE, THE PURCHASER SHALL USE PRODUCTS AT PURCHASER’S SOLE RISK, EVEN IF ST HAS BEEN INFORMED IN WRITING OF SUCH USAGE, UNLESS A PRODUCT IS EXPRESSLY DESIGNATED BY ST AS BEING INTENDED FOR “AUTOMOTIVE, AUTOMOTIVE SAFETY OR MEDICAL” INDUSTRY DOMAINS ACCORDING TO ST PRODUCT DESIGN SPECIFICATIONS. PRODUCTS FORMALLY ESCC, QML OR JAN QUALIFIED ARE DEEMED SUITABLE FOR USE IN AEROSPACE BY THE CORRESPONDING GOVERNMENTAL AGENCY.

Resale of ST products with provisions different from the statements and/or technical features set forth in this document shall immediately void any warranty granted by ST for the ST product or service described herein and shall not create or extend in any manner whatsoever, any liability of ST.

ST and the ST logo are trademarks or registered trademarks of ST in various countries.
Information in this document supersedes and replaces all information previously supplied.
The ST logo is a registered trademark of STMicroelectronics. All other names are the property of their respective owners.

© 2014 STMicroelectronics - All rights reserved

STMicroelectronics group of companies

Australia - Belgium - Brazil - Canada - China - Czech Republic - Finland - France - Germany - Hong Kong - India - Israel - Italy - Japan - Malaysia - Malta - Morocco - Philippines - Singapore - Spain - Sweden - Switzerland - United Kingdom - United States of America

www.st.com